TECHNICAL MANUAL

Sc Series Sub-Compact Tractor

Sc2400

Cub Cadet Yanmar LLC.
P.O. Box 361052
Cleveland, OH 44136-1052

PRINTED IN U.S.A

Version 1.0
Code No.: CY-0B040-G01200

1. SAFETY

Table of Contents

Safety Practices 1-3
Signal Words 1-3
Before Working on Equipment 1-4
Tire Safety 1-4
Batteries and Battery Acid 1-4
Exercise Care Around High Pressure Fluid Lines 1-5
Servicing the Cooling System Safely 1-5
Avoid Contact with Rotating Blades, Augers, and PTO Shafts 1-5
Environment and Ecology 1-5
Chemical Products Safety Information 1-6
Before Returning Equipment to Service 1-6
Important Federal Laws and Regulations Concerning Employers, Employees, and Operations 1-6
Employee Tractor Operating Instructions 1-7
Child Labor Under 16 years old 1-8

SAFETY PRACTICES



- Take the time to read the operator's manual and familialize yourself with the safety and operational instructions. Keep a copy of the manual for quick reference.
- Be prepared in case of emergencies. Keep a first aid kit and fire extinguisher in the shop area.
- Keep emergency phone numbers near the phone for quick access.
- Replace any damaged or missing safety labels on shop equipment.
- Replace any damaged or missing safety labels on equipment being serviced.
- Do not wear loose fitting clothing, and make sure long hair is secured to prevent entanglement, Jewely is best removed.
- Wear protective gear that is appropriate for the environment and the task at hand. This gear would include but is not limited to: Clear eye protection, Proper tinted eye protection for cutting and welding, hearing protection, respirator, protective gloves, chemically resistant gloves, armored foot-wear, protective jackets and chaps.
- Remember that some hazards have cumulative effect. A single exposure may cause little or no harm, but continual or repeated exposure may cause very serious harm.
- A safety alert symbol or signal word will be used to alert the reader to the potential for personal injury.
- Be aware of your surroundings and the potential hazards that are inherent to all large pieces of power equipment. All the lists and labels in the world cannot protect a technician from a instant of carelessness.

SIGNAL WORDS

Signal Words and Symbols are defined by ANSI Standard Z535.4:



CAUTION: is used to point-out a potentially hazardous situation that, if not avoided, may result in minor or moderate injury. It may also be used to alert against unsafe practices.



WARNING: indicates a potentially hazardous situation that, if not avoided, could result in serious injury or death.



DANGER: indicates an imminently hazardous situation that, if not avoided, will result in serious injury or death. This signal word is limited to the most extreme situations.

BEFORE WORKING ON EQUIPMENT

- Park the tractor on a level, solid, flat surface.
- Release fluid pressure by lowering any equipment to the ground, cycling hydraulic controls, and engaging safety locks.
- Shut off the engine for all procedures that do not require running adjustments or diagnosis. Remove the key from the key switch and allow the equipment and its working fluids to cool if it has been run recently.
- Disconnect the negative battery cable to prevent electrical shorts and to disable equipment with standard keys.
- When lifting and supporting equipment, use jack stands and do not rely on a hydraulic jack to safely support the tractor. Make sure all equipment is safely supported before strating work.

TIRE SAFETY

- Serious injury can occur if a tire is overinflated or improperly mounted on a rim.
- Do not attempt to mount tires onto rims unless you have proper equipment and training to complete the job.
- Do not attempt to fill tires with calcium chloride or sugar beet juice unless you have proper equipment and training to complete the job.
- Check the tire pressure regularly. If pressure is low, identify and correct the cause before returning the equipment to service.
- Maintain the correct tire pressure. Do not inflate the tire above its recommended pressure.
- Never weld or heat a wheel and tire assemble. The heat can expand the air in the tire and cause a tire to blow from the rim. Welding a rim can weaken and deform the rim.
- Never put any flamable liquids or gases in a tire.
- Do not stand in front of the tire while inflating. Use an extension to the air hose to allow you to stand clear of any potential hazards. Use a safety cage when working on split-rim wheels.

BATTERIES AND BATTERY ACID

Prevent battery explosions

- Prior to doing any service work disconnect the ground cable from the battery.
- Keep sparks and open flame away from the battery. Battery (hydrogen) gas can ignite. Batteries out-gas when charging.
- Wear protective eye glasses, boots, and gloves.

Prevent acid burns

- Fill batteries in a well ventilated area.
- Wear eye protection and rubber gloves.
- Avoid inhaling fumes when filling and charging batteries.

First-aid for acid contact with skin

- Flush exposed area with generous amount of water.
- Apply baking soda or lime to help neutralize the acid

First-aid for acid contact with eyes

- Flush eyes with a generous amount of water.
- Get medical attention immediately.

First-aid if acid is swallowed

- Drink large amounts of water or milk to dilute and neutralize the acid.
- Get medical attention immediately.

EXERCISE CARE AROUND HIGH PRESSURE FLUID LINES

- Fluid escaping under pressure can penetrate the skin causing serious injury.
- Avoid injury from escaping hydraulic fluid under pressure by shutting down the engine and relieving pressure in the system before disconnecting or connecting hydraulic lines. Inspect and tighten all connections before applying pressure to the hydraulic system.
- Search for leaks with a piece of cardboard. Protect hand from any high pressure fluids.
- If an accident occurs see a doctor immediately. Any fluids injected into the skin can cause Gangrene and must have medical attention promptly.
- Do not heat, weld, or use an open flame near fluid lines.

SERVICING THE COOLING SYSTEM SAFELY

- Most engine and cooling systems are pressurized and hot during and after operation.
- Shut the engine down and give ample time to cool before starting work on or near the cooling system.
- If the filler cap is hot to the touch it is not advisable to open. Serious burns can occur if opening, the filler cap under pressure.

AVOID CONTACT WITH ROTATING BLADES, AUGERS, AND PTO SHAFTS

Keep hands and feet away from moving parts while the machine is running.

All guards and safety tables should be in place when the equipment is operating.

Shut off power to

- Repair
- Lubricate
- Remove blades or implements

ENVIRONMENT AND ECOLOGY

Improperly disposing of waste can threaten the environment and ecology. Harmful waste can include:

- Oil
- Fuel
- Coolant
- Brake fluid
- Batteries
- Used brakes, dust

Only use approved leakproof containers to dispose of wastes

Do not pour waste fluids onto the ground, down drains, or in or around any water source.

Consult local authorities for information on proper legal disposal of hazardous materials.

California
Proposition 65 Warning

Diesel engine exhaust and some of its constituents are known to the statte of California to cause cancer, birth defects and other reproductive harm.

California
Proposition 65 Warning

Battery posts, terminals, and related accessories contain lead and lead compounds, chemicals known to the state of California to cause cancer and reproductive harm.

Wash hands after handling.

CHEMICAL PRODUCTS SAFETY INFORMATION

Prolonged exposure to hazardous chemicals can cause serious injury. Hazardous materials include but are not limited to:

- Lubricants
- Coolants
- Paints
- Adhesives
- Fuels

A material Safety Data Sheet (MSDS) provides specific detailes on a chemical product:

- Physical and Health hazards
- Safety procedures
- Emergency response protocols

Check the MSDS before you start any job that includes any hazardous chemicals.

Cub Cadet Yanmar can provides MSDS upon request

BEFORE RETURNING EQUIPMENT TO SERVICE

Confirm that all safety features are operating correctly.Replace any worn or missing instructional or safety labels.

Never alter or repair the Roll-Over Protection Structure (ROPS). Welding, Bending, Drilling, or Cutting, can weaken the supportive ability of the ROPS structure.

Use only attachment authorized by Cub Cadet Yanmar LLC.

Test-run the equipment

- Follow all operating standards and instructions described in the Operator's Manuals that apply to the tractor and all applicable accessories.
- Perform tests in a safe area that is free from hazards and by-standers.
- Correct any safety-related faults before returning the equipment to service.

IMPORTANT FEDERAL LAWS AND REGULATIONS* CONCERNING EMPLOYERS, EMPLOYEES, AND OPERATIONS

* (This section is intended to explain in broad terms the concept and effect of the following federal laws and regulations. It is not intended as a legal interpretation of the laws, and should not be considered as such.)

U.S. Public Law 91-596 (The Williams-Steiger Occupational and Health Act of 1970) OSHA

This Act Seeks:
"…to assure so far as possible every working man and woman in the nation safe and healthful working conditions and to preserve our human resources…"

DUTIES
\Sec. 5(a) Each employer-
(1) shall furnish to each of his employees employment and a place of employment, which are free from recognized hazards that are causing or likely to cause death or serious physical harm to his employees;

(2) shall comply with occupational safety and health standards promulgated under this Act.

(b) Each employee shall comply with occupational safety and health standards and all rules, regulations and orders issued pursuant to this Act, which are applicable to his own actions and conduct.

OSHA Regulations

Current OSHA regulations state in part: "At the time of initial assignment and at least annually thereafter, the employer shall instruct every employee in the safe operation and servicing of all equipment with which the employee is or well be involved." These will include (but are not limited to) instructions to:

- Keep all guards in place when the machine is in operation.
- Permit no riders on equipment.

- Stop engine, disconnect the power source, and wait for all machine movement to stop before servicing, adjusting, cleaning or unclogging the equipment, except where the machine must be running to be properly serviced or maintained, in which case the employer shall instruct employees as to all steps and procedures which are necessary to safely service or maintain the equipment.

- Make sure everyone is clear of the machinery before starting the engine, engaging power, or operating the machine.

EMPLOYEE TRACTOR OPERATING INSTRUCTIONS

Securely fasten your seat belt if the tractor has a ROPS.

Where possible, avoid operating the tractor near ditches, embankments, and holes.

Reduce speed when turning, crossing slopes, and on rough slick, or muddy surfaces.

Sray off slopes too steep for safe operation

Watch where you are going, especially at row ends, on roads, and around trees.

Do not permit others to ride.

Operate the tractor smoothly - no jerky turns, starts, or stops.

Hitch only to the drawbar and hitch points recommended by tractor manufacturers.

When the tractor is stopped, set the brakes securely and use park lock if possible.

CHILD LABOR UNDER 16 YEARS OLD

Some regulation specify that no one under the age of 16 may operate power machinery. It is your responsibility to know what these regulations are in your own area or situations. (Refer to U.S. Dept. of Labor, Employment Srandard Administration, Wage & Home Division, Child Labor Bulletin #102)

2. INTRODUCTION

Table of Contents

Shop Handbook Intent and Use ……2-3
Engine ……2-3
Hydro-Static Transmission ……2-3
Fasteners ……2-4
Assembly Procedure ……2-4
The Tractor ……2-4
Fluids and Lubricants ……2-5
Torque Tables ……2-6
Identifying Hardware ……2-8
Hydraulic Fittings ……2-9

Shop Handbook Intent and Use

This Handbook is intended to provide Cub Cadet Independent Retail dealers with preliminary service information.

Disclaimer

This handbook was written using a prototype tractor. The information contained in the handbook is correct at the time of writing. Both the product and the information about the product are subject to change without notice.

Text Format

Some key words will be used to call attention to the paragragh below them.

NOTE: is used to point-out information that is relevant to the procedure, but does not fit as a step in the procedure.

CAUTION: is used to point-out a potentially hazardous situation that, if not avoided, may result in minor or moderate injury. It may also be used to alert against unsafe practices.

WARNING: indicates a potentially hazardous situation that, if not avoided, could result in death or serious injury.

DANGER: indicates an imminently hazardous situation that, if not avoided, will result in death or serious injury. This signal word is limited to the most extreme situations.

Bullet points: are used to indicate sub-steps or fazts of interest.

Disclaimer

This Shop Handbook is intended for use by trained, professional technicians.

- As a professional, the technician should be familiar with the tractor and the information contained in the Operator's Manual before starting work on the tractor.
- Common sense in operation and safety is assumed.
- In no event shall MTD, Cub Cadet, or Cub Cadet Yanmar be liable for poor text interpretation or poor execution of the procedures described in the text
- If the person using this manual is uncomfortable with any of the procedures they encounter, they should seek the help of a qualified technician or Cab Cadet Technician Support.

Additional technical and service information is also available to our Cub Cadet Dealer personnel at:

Cub Cadet Yanmar LLC
P.O. Box 361052
Cleveland, OH 44136-1052
Telephone: (330)273-8669
Additional information available on the Dealaer Extran

ENGINE

- The Yanmar diesel engines used in Cub Cadet Yanmar products are fully serviceable by Cub Cadet Independent Retail Dealers.
- Engine, and engine-related information regarding the fuel system, cooling system, exhaust system and regular maintenance points of the engine is contained in this manual.
- Engine model is 3TNV72-YUKS will be used in this tractor. Specification and Serial number information can be found on a riveted tag and an adhesive label attached to the top of the engine valve cover. See Figure 2.1.

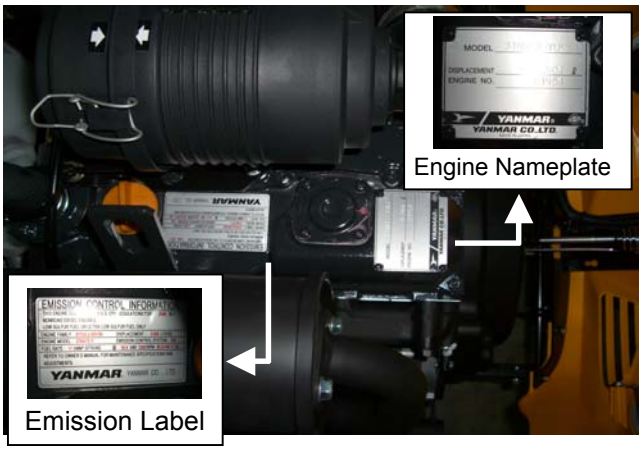

Figure 2.1

HYDRO-STATIC TRANSMISSION

The hydro-static transmission is integrated into the main transmission. The transmission must be disassembled to reach the Hydrostatic pump and motor.

Fasteners

- Most of fasteners used on the tractor are sized in **metric**. Some are in fractional inches. For this reason, wrench sizes are frequently identified in the text, and measurements are given in inch and metric scales.

- If there is a danger of using the wrong fastener; length, size, and oitch may be described in the text or an accompanying table.

- If a fastener has a **locking feature** that has worn, replacce the fastener or apply a small amount of releasable thread locking compound such as Loctite® 242 (blue).

- Some fasteners like cotter pins are single-use items that are not to be reused.
  Other fasteners such as lock washers, retaining rings, and internal cotter pins (hairpin clips) may be reused if they do not show signs of wear or damage. This manual leaves that decision to the judgement of the technician.

- General fastener torques are given in tables at the end of this chapter.

Assembly Procedures

Torque specifications may be noted in the part of the text that covers assembly. They may also be summarized in tables along with special instructions regarding locking or lubrications.
Whichever method is more appropriate will be used. In many cases, both will be used so that the manual is handy as a quick-reference guide as well as a step-by-step procedure guide that does not require the user to hunt for information.

The level of **assembly instructions** provided will be determined by the complexity and of reassembly, and by the potential for unsafe or destructive conditions to arise from mistakes made in assembly.

Some instructions may refer to other parts of the manual for subsidiary procedures. This avoids repeating the same procedure two or three times in the manual.

The Tractor

The Sc2400 tractors are the product of a joint-venture between Cub Cadet and Yanmar. See Figure 2.2.



Figure 2.2

- The Sc2400 carries a yellow and black paint scheme, similar to the Ex3200 and Ex2900.

- Cub Cadet Yanmar will provide warranty, technical, and parts support for the Sc2400 tractors.

- The Sc series tractors will carry a number tag on the right frame member. See Figure 2.3.



Figure 2.3

- 54A-A4N-727 will be the factory number designating the basic Sc2400. There will be variations to identify different options.

- Special tools: There are some specialized tools required to work on the tractor, but all are commonly available. No proprietary Cub Cadet Yanmar tools are needed.

Special Tools

There are some specialized tools required to work on the tractor, but all are commonly available. No proprietary Cub Cadet Yanmar tools are needed.

Fluids and Lubricants

Table 1

Use	Qty.	Description	Part #
Engine Coolant	3.4 U.S. Qts. (3.2L)	High quality permanent type antifreeze (Etylene glycol with corrosion and rust inhibiting chemicals) Mixed in a 50/50 ratio with distilled water. ASTM D6210 and D4985	Yanmar Ultralife YG-30
Engine Oil[1]	Approximately 2.5 U.S. Qts. (2.4L) with filter change	API Service Category CD or higher JASO Service Category DH-1 SAE 10W-30 or 15W-40	737-3066 10W30 737-3039 15W40 737-3032 SAE30
Front Drive Axle Lube	Approximately 2.6 U.S. Qts. (2.5L)	Cub Cadet gear lube or SAE 80W-90 gear oil	737-04040 qt.
Transmission Lube	Approximately 2.0 U.S. Gal. (7.5L) with filter	Cub Cadet Hydraulic / Transmission Fluid	737-3025 qt. 737-3062 gal.
Grease[2]	Chassis pivot points, grease until full	Cub Cadet 251 grease or NLGI grade No. 2	737-3034
Fuel[3]	5.8 U.S. Gal. (22L)	No.2 Diesel fuel No.1 Diesel fuel below 14 ℉ (-10℃)	Purchase locally

[1]**Engine Oil**: See table below (Table 2) for the appropriate oil viscosity for a given ambient temperature.

Table 2

Viscosity	Temp. F	Temp. C
10W-30	-4 to +86	-20 to +30
15W-40	5 to 100	-15 to +38
SAE 30	50 to 86	10 to 30
SAE 40	68 to 104	20 to 40
20W-50	14 to 122	-10 to 50

[2]**Grease**: Chassis pivot points included: Front axle pivot, tie rod ends, clutch pedal pivot, brake pedal pivot, brake pedal shaft, top-link of 3-point hitch.

[3]**Fuel**: Fuel containing up to 5% by volume of Bio-Diesel is acceptable for use in the Yanmar engines. This fuel is often referred to as B5 diesel, and must conform to ASTM standard D-6751. Even fuels that comply with this standard can have adverse effects on the fuel system and seals. It is also very important the B5 diesel fuel be fresh. Fuel should be used or rotated within a two-week period. Improper use of B5 fuel will cause engine and fuel system damage that is not warrantable. Cetane rating must be a minimum of 40, but a Cwtane rating of 50 or above is preferable. Sulghur content must not exceed .05%.

TORQUE TABLES

Metric fasteners should be tightened according to the following table. These are for general use and include a 10% tolerance: See Table 3:.

Table 3

Class	4.8	4.8	4.8	4.8	8.8	8.8	8.8	8.8	10.9	10.9	10.9	10.9	12.9	12.9	12.9	12.9
Lubricated/Dry	Lubricated		Dry		Lubricated		Dry		Lubricated		Dry		Lubricated		Dry	
Size	N-m	Ft-lb.	N-m	Ft-lb.	N-m	Ft-lb.	N-m	Ft-lb.	N-m	Ft-lb.	N-m	Ft-lb.	N-m	Ft-lb.	N-m	Ft-lb.
M6	4.8	3.5	6.0	4.4	9.0	6.6	11	8.1	13	10	17	13	15	11	19	14
M8	12	8.9	15	11	22	16	28	21	32	24	40	30	37	27	47	35
M10	23	17	29	21	43	32	55	41	63	46	80	59	75	55	95	70
M12	40	30	50	37	75	55	95	70	110	81	140	103	130	96	165	122
M14	63	46	80	59	120	89	150	111	175	129	225	166	205	151	260	192
M16	100	74	125	92	190	140	240	177	275	203	350	258	320	236	400	295
M18	135	100	175	129	260	192	330	243	375	277	475	350	440	325	560	413
M20	190	140	240	177	375	277	475	350	530	391	675	498	625	461	800	590
M22	260	192	330	243	510	376	650	479	725	535	925	682	850	627	1075	793
M24	330	243	425	313	650	479	825	609	925	682	1150	848	1075	793	1350	996
M27	490	361	625	461	950	701	1200	885	1350	996	1700	1254	1600	1180	2000	1475
M30	675	498	850	627	1300	959	1650	1217	1850	1365	2300	1696	2150	1586	2700	1992
M33	900	664	1150	848	1750	1291	2200	1623	2500	1844	3150	2323	2900	2139	3700	2729
M36	1150	848	1450	1070	2250	1660	2850	2102	3200	2360	4050	2987	3750	2766	4750	3504

Lubricated
If the fastener is lubed with oil or threadlocking compound, or if the manufacturer's coating is oil and phospahte based.

Dry
If the fastener is not lubricated and the manufacturer's coating is other than oil and phosphate.

- When a torque figure applies to a nut on a bolt, it should be applied to the nut not the bolt.
- Some specialized fasteners are intended to shear on impact of over-load. Do not replace them with standard fasteners or extensive damage will result.
- Only replace fasteners with new ones of identical specification.

Inch fasteners should be tightened according to the following table. These are for general use and include a 10% tolerance: See Table 4:.

Table 4

Grade	Grade 1				Grade 2b				Grade 5				Grade 8			
Lubricated/Dry	Lubricated		Dry		Lubricated		Dry		Lubricated		Dry		Lubricated		Dry	
Size	N-m	Ft-lb.	N-m	Ft-lb.	N-m	Ft-lb.	N-m	Ft-lb.	N-m	Ft-lb.	N-m	Ft-lb.	N-m	Ft-lb.	N-m	Ft-lb.
1/4"	3.7	2.7	4.7	3.5	6.0	4.4	7.5	5.5	10	7.0	12	8.9	14	10	17	13
5/16"	7.7	5.7	10.0	7.4	12	8.9	15	11	20	15	25	18	28	21	35	26
3/8"	14	10	17	13	22	16	27	20	35	26	44	32	50	37	63	46
7/16"	22	16	28	21	35	26	44	32	55	41	70	52	80	59	100	74
1/2"	33	24	42	31	53	39	67	49	85	63	110	81	120	89	150	111
9/16"	48	35	60	44	75	55	95	70	125	92	155	114	175	129	225	166
5/8"	67	49	85	63	105	77	135	100	170	125	215	159	215	159	300	221
3/4"	120	89	150	111	190	140	240	177	300	221	375	277	425	313	550	406
7/8"	190	140	240	177	190	140	240	177	490	361	625	461	700	516	875	645
1"	290	214	360	266	290	214	360	266	725	535	925	682	1050	774	1300	959
1-1/8"	470	347	510	376	470	347	510	376	900	664	1150	848	1450	1070	1850	1365
1-1/4"	570	420	725	535	570	420	725	535	1300	959	1650	1217	2050	1512	2600	1918
1-3/8"	750	553	950	701	750	553	950	701	1700	1254	2150	1586	2700	1992	3400	2508
1-1/2"	1000	738	1250	922	990	730	1250	922	2250	1660	2850	2102	3600	2655	4550	3356

Lubricated
If the fastener is lubed with oil or threadlocking compound, or if the manufacturer's coating is oil and phospahte based.

Dry
If the fastener is not lubricated and the manufacturer's coating is other than oil and phosphate.

- When a torque figure applies to a nut on a bolt, it should be applied to the nut not the bolt.
- Some specialized fasteners are intended to shear on impact of over-load. Do not replace them with standard fasteners or extensive damage will result.
- Only replace fasteners with new ones of identical specification.

IDENTIFYING HARDWARE

1. Metric Vs. Inch bolts: Metric bolts are marked with class numbers stamped or embossed on the head of the bolt. Some metric bolts also carry the class number on one of the facets. Bolts made to inch standards are identified with hash marks and manufacturer's markings on the head.

2. Inch bolts are marked: See Figure 2.4.

   2a. Grade 1 or 2b: no marks

   2b. Grade 5: 3 marks
   2c. Grade 8: 5 marks

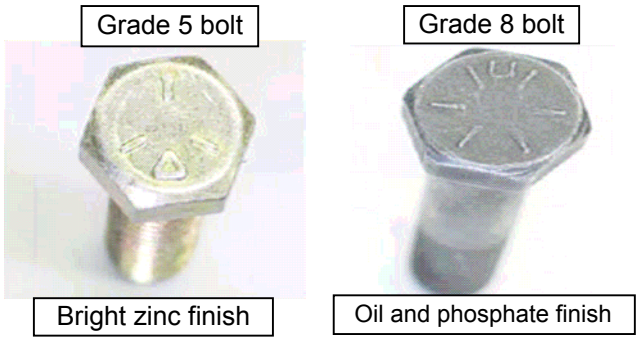

Figure 2.4

3. Metric bolts carry the following marks: See Figure 2.5.

   3a. Class 4.8 is marked "4.8".

   3b. Class 8.8 is marked "8.8".

   3c. Class 9.8 is marked "9.8".

   3d. Class 10.9 is marked "10.9".

4. Class 12.9 is marked "12.9". Metric nuts carry the following marks:

   4a. Class 5 is marked "5", and may carry two hash marks, on centered on a facet, the second centered on a peak neary opposite the marked facet.

   4b. Class 10 is marked "10", and may carry two hash marks on adjacent peaks.

   4c. Class 12 is marked "12", and may carry an adjacent pair of hash marks stradling on of the peaks of the nut.

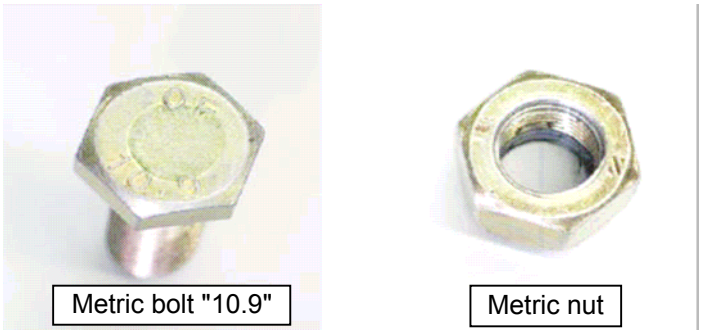

Figure 2.5

5. Metric Vs. Inch nuts: Metric nuts carry hash marks or class numbers on the top or bottom surface. Bolts made to inch standards carry hash marks on the corners between the facets and sometimes on the top or bottom surface.

6. Inch nuts carry the following marks:

   6a. Grade 3 has no marks.

   6b. Grade 5 carries a single row of hash marks on the perimeter of the nut's peaks as well as a pair of hash marks on the top or bottom, one peak away from one-another.

   6c. Grade 8 carries a double row of hash marks on the perimeter of the nut's peaks, as well as a pair of hash marks on two adjacent peaks on the top or bottom of the nut.

Hydraulic Fittings

WARNING: Hydraulic fluid that is under pressure can cause serious damage and personal injury. Make sure to relieve any pressure in the hydraulic system before attempting to make any repairs.

- Inspect all hydraulic lines for signs of leakage or wear. Replace any hydraulic line that is questionable.
- Inspect all O-rings, any that show signs of damage or are dirty should be replaced.
- When replacing the O-rings, coat them with plenty of petroleum jelly.
- When adjusting angle fittings, loosen the lock nut with one wrench while holding the fitting with a second wrench. Rotate the fitting to the desired angle, and tighten the lock nut. See Figure 2.6.

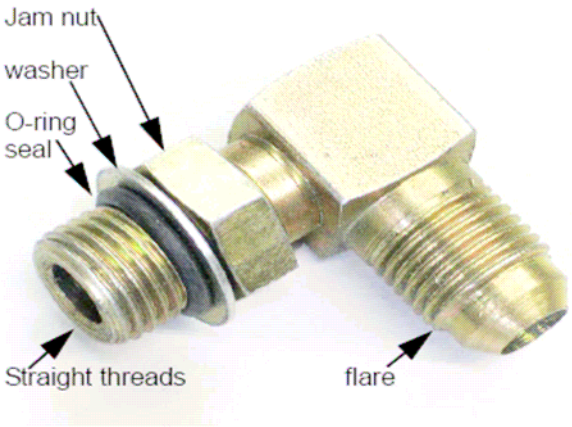

Figure 2.6

- Tighten straight fittings to the torque value shown in the accompanying chart. For angle fittings, tighten the jam nut to the torque value shown in the accompanying chart: See Table 5:.

Table 5

Thread Size and Pitch	Torque[a]		Numbers of flats[b]
	N-m	Ft-lb.	
3/8"-24	8	6	2
7-16"-20	12	9	2
1/2"-20	16	12	2
9/16"-18	24	18	2
3/4"-16	46	34	2
7/8"-14	62	46	1-1/2
1-1/16"-12	1025	75	1
1-3/16"-12	122	90	1
1-5/16"-12	142	105	3/4
1-5/8"-12	190	140	3/4
1-7/8"-12	217	160	1/2

a: The torque tolerance is +15% to -20%

b: To be used if a torque wrench cannot be used. After tightening the fitting by hand, mark the nut or boss. Tighten the jam nut or fitting the number of flats indicated in the table.

Torque specifications for inch-sized face-seal fittings:

Nominal Tube OD/Hose ID				Face Seal Tube/Hose End						O-ring Stud Ends			
Metric Tube OD	**Inch Tube OD**			**Thread Size**	**Hex Size**	**Tube Nut/Swivel Nut Torque**		**Bulkhead Lock Nut Torque**		**Thread Size**	**Hex Size**	**Steel or Gray Iron Torque**	
mm	A-N	inch	mm	inch	mm	N-m	ft-lb.	N-m	ft-lb.	mm	mm	N-m	ft-lb.
6	-4	0.250	6.35	9/16-18	17	16	12	12	9	M12x1.5	17	21	15.5
8	-5	0.312	7.94										
										M14x1.5	19	33	24
10	-6	0.375	9.52	11/6-16	22	24	18	24	18	M16x1.5	22	41	30
12	-8	0.500	12.70	13/16-16	24	50	37	46	34	M18x1.5	24	50	37
16	-10	0.625	15.88	1-14	30	69	51	62	46	M22x1.5	27	69	51
	-12	0.750	19.05	1-3/16-12	36	102	75	102	75	M27x2	32	102	75
22	-14	0.875	22.22	1-3/16-12	36	102	75	102	75	M30x2	36		
25	-16	1.000	25.40	1-7/16-12	41	142	105	142	105	M33x2	41	158	117
										M38x2	46	176	130

Torque specifications for metric-sized face-seal fittings:

Nominal Tube OD/Hose ID				Face Seal Tube/Hose End					O-ring Stud Ends		
Metric Tube OD	**Inch Tube OD**			**Thread Size**	**Tube Nut/Swivel Nut Torque**		**Bulkhead Lock Nut Torque**		**Thread Size**	**Straight Fitting or Lock Nut Torque**	
mm	A-N	inch	mm	inch	N-m	ft-lb.	N-m	ft-lb.	inch	N-m	ft-lb.
	-3	0.188	4.76						3/8-24	8	6
6	-4	0.250	6.35	9/16-18	16	12	12	9	7/16-20	12	9
8	-5	0.312	7.94						1/2-20	16	12
10	-6	0.375	9.52	11/6-16	24	18	24	18	9/16-18	24	18
12	-8	0.500	12.70	13/16-16	50	37	46	34	3/4-16	46	34
16	-10	0.625	15.88	1-14	69	51	62	46	7/8-14	62	46
	-12	0.750	19.05	1-3/16-12	102	75	102	75	1-1/16-12	102	75
22	-14	0.875	22.22	1-3/16-12	102	75	102	75	1-3/16-12	122	90
25	-16	1.000	25.40	1-7/16-12	142	105	142	105	1-5/16-12	142	105
32	-20	1.250	31.75	1-11/16-12	190	140	190	140	1-5/8-12	190	140

3. ENGINE



TNV series

SERVICE MANUAL

3TNV72

YANMAR®

P/N: 0BTNV-U00300

INDUSTRIAL ENGINES

TABLE OF CONTENTS

Page

Table of Contents iii
Introduction 1-1
Yanmar Warranties 2-1
Safety 3-1
General Service Information 4-1
Periodic Maintenance 5-1
Engine 6-1
Fuel System 7-1
Cooling System 8-1
Lubrication System 9-1
Starter Motor 10-1
Alternator 11-1
Electric Wiring 12-1
Troubleshooting 13-1

This Page Intentionally Left Blank

Section 1

INTRODUCTION

This *Service Manual* describes the service procedures for the TNV series indirect injection engines. These engines are certified by the U.S. EPA, California ARB and/or the 97/68/EC Directive for industrial use.

Please use this manual for accurate, quick and safe servicing of the engine. Since the directions in this manual are for a typical engine, some specifications and components may be different from your engine. Refer to the documentation supplied by the optional equipment manufacturer for specific service instructions.

Yanmar products are continuously undergoing improvement. This *Service Manual* might not address possible field modifications to the equipment. Contact an authorized Yanmar industrial engine dealer or distributor for answers to any questions relating to field modifications.

This Page Intentionally Left Blank

Section 2

YANMAR WARRANTIES

Page

Yanmar Limited Warranty 2-3
- What is Covered by this Warranty? 2-3
- How Long is the Warranty Period? 2-3
- What the Engine Owner Must Do: 2-3
- To Locate an Authorized Yanmar Industrial Engine Dealer or Distributor: 2-4
- What Yanmar Will Do: 2-4
- What is Not Covered by this Warranty? 2-4
- Warranty Limitations: 2-5
- Warranty Modifications: 2-5
- Questions: 2-5
- Retail Purchaser Registration 2-5

Emission System Warranty 2-6

Yanmar Co., Ltd. Limited Emission Control System Warranty - USA Only 2-6
- Your Warranty Rights and Obligations: 2-6
- Manufacturer's Warranty Period: 2-6
- Warranty Coverage: 2-7
- Warranted Parts: 2-7
- Exclusions: 2-8
- Owner's Warranty Responsibilities: 2-8

This Page Intentionally Left Blank

YANMAR LIMITED WARRANTY

What is Covered by this Warranty?

Yanmar warrants to the original retail purchaser that a new Yanmar TNV Series Industrial Engine will be free from defects in material and / or workmanship for the duration of the warranty period.

Note: Yanmar engines may be equipped with external components including, but not limited to: wiring harnesses, electrical devices, control panels, radiators, air filters, fuel filters, and / or exhaust systems that are supplied and / or installed by manufacturers other than Yanmar. For warranty information on such external components, please contact the machine or component manufacturer directly or see your authorized Yanmar dealer or distributor.

THIS WARRANTY IS PROVIDED IN LIEU OF ALL OTHER WARRANTIES, EXPRESSED OR IMPLIED. YANMAR SPECIFICALLY DISCLAIMS ANY IMPLIED WARRANTIES OF MERCHANTABILITY OR FITNESS FOR A PARTICULAR PURPOSE, except where such disclaimer is prohibited by law. IF SUCH DISCLAIMER IS PROHIBITED BY LAW, THEN IMPLIED WARRANTIES SHALL BE LIMITED IN DURATION TO THE LIFE OF THE EXPRESSED WARRANTY.

How Long is the Warranty Period?

The Yanmar standard limited warranty period runs for a period of **twenty-four (24) months or two-thousand (2000) engine operation hours**, whichever occurs first. An extended limited warranty of thirty-six (36) months or three thousand (3000) engine operating hours, whichever occurs first, is provided for these specific parts only: the cylinder block, cylinder head, crankshaft forging, connecting rods, flywheel, flywheel housing, camshaft, timing gear, and gear case. The Warranty Period for both the standard limited warranty and the extended limited warranty (by duration or operation hours) begins on the date of delivery to the original retail purchaser and is valid only until the applicable warranted duration has passed or the operation hours are exceeded, whichever comes first.

What the Engine Owner Must Do:

If you believe your Yanmar engine has experienced a failure due to a defect in material and / or workmanship, you must contact an authorized Yanmar industrial engine dealer or distributor within thirty (30) days of discovering the failure. You must provide proof of ownership of the engine, proof of the date of the engine purchase and delivery, and documentation of the engine operation hours. Acceptable forms of proof of delivery date include, but are not limited to: the original warranty registration or sales receipts or other documents maintained in the ordinary course of business by Yanmar dealers and / or distributors, indicating the date of delivery of the Yanmar product to the original retail purchaser. This information is necessary to establish whether the Yanmar product is still within the warranty period. Thus, Yanmar strongly recommends you register your engine as soon as possible after purchase in order to facilitate any future warranty matters.

You are responsible for the transportation of the engine to and from the repair location as designated by Yanmar.

Yanmar Limited Warranty - Continued

To Locate an Authorized Yanmar Industrial Engine Dealer or Distributor:

You can locate your nearest authorized Yanmar industrial engine dealer or distributor by visiting the Yanmar Corp., LTD. website at:

http://www.yanmar.co.jp (The Japanese language page will be displayed.) For English language “click” on “English Page.”)

- “Click” on “Network” in the website heading to view the “Yanmar Worldwide Network.”
- Choose and “Click” on the desired product group.
- “Click” on the Icon closest to your region.
- “Click” on the desired country or Associate company to locate your nearest authorized Yanmar industrial engine dealer or distributor.
- You may also contact Yanmar by clicking on “Inquiry” in the website heading and typing in your question or comment.

What Yanmar Will Do:

Yanmar warrants to the original retail purchaser of a new Yanmar engine that Yanmar will make such repairs and / or replacements at Yanmar’s option, of any parts(s) of the Yanmar product covered by this Warranty found to be defective in material and / or workmanship. Such repairs and / or replacements will be made at a location designated by Yanmar at no cost to the purchaser for parts or labor.

What is Not Covered by this Warranty?

This Warranty does not cover parts affected by or damaged by any reason other than defective materials or workmanship including, but not limited to, accident, misuse, abuse, “Acts of God”, neglect, improper installation, improper maintenance, improper storage, the use of unsuitable attachments or parts, the use of contaminated fuels, the use of fuels, oils, lubricants, or fluids other than those recommended in your Yanmar Operation Manual, unauthorized alterations or modifications, ordinary wear and tear, and rust or corrosion. This Warranty does not cover the cost of parts and / or labor required to perform normal / scheduled maintenance on your Yanmar engine. This Warranty does not cover consumable parts such as, but not limited to, filters, belts, hoses, fuel injector nozzles, lubricants and cleaning fluids. This warranty does not cover the cost of shipping the product to or from the warranty repair facility.

Yanmar Limited Warranty - Continued

Warranty Limitations:

The foregoing is Yanmar's only obligation to you and your exclusive remedy for breach of warranty. Failure to follow the requirements for submitting a claim under this Warranty may result in a waiver of all claims for damages and other relief. **In no event shall Yanmar or any authorized industrial engine dealer or distributor be liable for incidental, special or consequential damages.** Such consequential damages may include, but not be limited to, loss of revenue, loan payments, cost of rental of substitute equipment, insurance coverage, storage, lodging, transportation, fuel, mileage, and telephone costs. The limitations in this Warranty apply regardless of whether your claims are based on breach of contract, tort (including negligence and strict liability) or any other theory. Any action arising hereunder must be brought within one (1) year after the cause of action accrues or it shall be barred. Some states and countries do not allow certain limitations on warranties or for breach of warranties. **This Warranty gives you specific legal rights, and you may also have other rights which vary from state to state and country to country.** Limitations set forth in this paragraph shall not apply to the extent that they are prohibited by law.

Warranty Modifications:

Except as modified in writing and signed by the parties, this Warranty is and shall remain the complete and exclusive agreement between the parties with respect to warranties, superseding all prior agreements, written and oral, and all other communications between the parties relating to warranties. **No person or entity is authorized to give any other warranty or to assume any other obligation on behalf of Yanmar, either orally or in writing.**

Questions:

If you have any questions or concerns regarding this Warranty, please call or write to the nearest authorized Yanmar industrial engine dealer / distributor or other authorized facility.

Retail Purchaser Registration

It is very important for the original retail purchaser to register the Yanmar product. Registration enables Yanmar to provide the best support for your Yanmar product.

As soon as possible after the purchase of your engine, Yanmar highly recommends that you use the following website to register your purchase:

http://www.yanmar.co.jp

If it is not possible to access the web site, please contact the nearest Yanmar dealer or distributor.

EMISSION SYSTEM WARRANTY

YANMAR CO., LTD. LIMITED EMISSION CONTROL SYSTEM WARRANTY - USA ONLY

Your Warranty Rights and Obligations:

California

The California Air Resources Board (CARB), the Environmental Protection Agency (EPA) and Yanmar Co., Ltd. hereafter referred to as Yanmar, are pleased to explain the **emission control system warranty** on your industrial compression-ignition engine. In California, model year 2000 or later off-road compression-ignition engines must be designed, built and equipped to meet the State's stringent anti-smog standards. In all states, 1998 and later non-road compression-ignition engines must be designed, built and equipped to meet the United States EPA emissions standards. Yanmar warrants the emission control system on your engine for the periods of time listed below provided there has been no abuse, neglect or improper maintenance of your engine.

Your emission control system may include parts such as the fuel injection system and the air induction system. Also included may be hoses, belts, connectors and other emission-related assemblies.

Where a warrantable condition exists, Yanmar will repair your non-road compression-ignition engine at no charge to you including diagnosis, parts and labor.

Manufacturer's Warranty Period:

The model year 1998 or later certified and labeled non-road compression-ignition engines are warranted for the periods listed below. If any emission-related part on your engine is found to be defective during the applicable warranty period, the part will be replaced by Yanmar.

Engine Type	Warranty Period by Number of Years or Hours of Operation
Constant speed engines rated at or above 50 hp SAE (37 kW)	The warranty period is five (5) years or 3,000 hours of use, whichever occurs first. In the absence of a device to measure the hours of use, the engine has a warranty period of five (5) years.
Constant speed engines rated under 50 hp SAE (37 kW) with rated speeds greater than or equal to 3,000 rpm	The warranty period is two (2) years or 3,000 hours of use, whichever occurs first. In the absence of a device to measure the hours of use, the engine has a warranty period of two (2) years.
Engines rated at or above 26 hp SAE (19 kW)	The warranty period is five (5) years or 3,000 hours of use, whichever occurs first. In the absence of a device to measure the hours of use, the engine has a warranty period of five (5) years.
Engines rated under 26 hp SAE (19 kW)	The warranty period is two (2) years or 3,000 hours of use, whichever occurs first. In the absence of a device to measure the hours of use, the engine has a warranty period of two (2) years.

Limited Emission Control System Warranty - USA Only - Continued

Warranty Coverage:

This warranty is transferable to each subsequent purchaser for the duration of the warranty period. Repair or replacement of any warranted part will be performed at an authorized Yanmar industrial engine dealer or distributor.

Warranted parts not scheduled for replacement as required maintenance in the Operation Manual shall be warranted for the warranty period. Warranted parts scheduled for replacement as required maintenance in the operation manual are warranted for the period of time prior to the first scheduled replacement. Any part repaired or replaced under warranty shall be warranted for the remaining warranty period.

During the warranty period, Yanmar is liable for damages to other engine components caused by the failure of any warranted part during the warranty period.

Any replacement part which is functionally identical to the original equipment part in all respects may be used in the maintenance or repair of your engine, and shall not reduce Yanmar's warranty obligations. Add-on or modified parts that are not exempted may not be used. The use of any non-exempted add-on or modified parts shall be grounds for disallowing a warranty.

Warranted Parts:

This warranty covers engine components that are a part of the emission control system of the engine as delivered by Yanmar to the original retail purchaser. Such components may include the following:

- Fuel Injection System
- Cold Start Enrichment System
- Intake Manifold
- Turbocharger Systems
- Exhaust Manifold
- Positive Crankcase Ventilation System
- Hoses, belts, connectors and assemblies associated with emission control systems

Since emissions-related parts may vary slightly between models, certain models may not contain all of these parts and other models may contain the functional equivalents.

Limited Emission Control System Warranty - USA Only - Continued

Exclusions:

Failures other than those arising from defects in material and / or workmanship are not covered by this warranty. The warranty does not extend to the following: malfunctions caused by abuse, misuse, improper adjustment, modification, alteration, tampering, disconnection, improper or inadequate maintenance or use of non-recommended fuels and lubricating oils; accident-caused damage, and replacement of expendable items made in connection with scheduled maintenance. Yanmar disclaims any responsibility for incidental or consequential damages such as loss of time, inconvenience, loss of use of equipment / engine or commercial loss.

Owner's Warranty Responsibilities:

As the engine owner, you are responsible for the performance of the required maintenance listed in your owner's manual. Yanmar recommends that you retain all documentation, including receipts, covering maintenance on your non-road compression-ignition engine, but Yanmar cannot deny warranty solely for the lack of receipts, or for your failure to ensure the performance of all scheduled maintenance.

Yanmar may deny your warranty coverage of your non-road compression-ignition engine if a part has failed due to abuse, neglect, improper maintenance or unapproved modifications.

Your engine is designed to operate on diesel fuel only. Use of any other fuel may result in your engine no longer operating in compliance with applicable emissions requirements.

You are responsible for initiating the warranty process. You must present your engine to a Yanmar dealer as soon as a problem exists. The warranty repairs should be completed by the dealer as expeditiously as possible. If you have any questions regarding your warranty rights and responsibilities, or would like information on the nearest Yanmar dealer or authorized service center, you should contact Yanmar America Corporation at 1-800-872-2867.

Section 3

SAFETY

Page

Safety Statements 3-3
Safety Precautions 3-4

This Page Intentionally Left Blank

SAFETY STATEMENTS

Yanmar is concerned for your safety and your machine's condition. Safety statements are one of the primary ways to call your attention to the potential hazards associated with Yanmar TNV engine operation. Follow the precautions listed throughout the manual before operation, during operation and during periodic maintenance procedures for your safety, the safety of others and to protect the performance of your engine. Keep the labels from becoming dirty or torn and replace them if they are lost or damaged. Also, if you need to replace a part that has a label attached to it, make sure you order the new part and label at the same time.



This safety alert symbol appears with most safety statements. It means attention, become alert, your safety is involved! Please read and abide by the message that follows the safety alert symbol.

⚠ DANGER

Danger (the word "DANGER" is in white letters with a red rectangle behind it) - indicates an imminently hazardous situation which, if not avoided, will result in death or serious injury. Danger is limited to the most extreme situations.

0000001en

⚠ WARNING

Warning (the word "WARNING" is in black letters with an orange rectangle behind it) – indicates a potentially hazardous situation which, if not avoided, could result in death or serious injury.

0000001en

⚠ CAUTION

Caution (the word "CAUTION" is in black letters with a yellow rectangle behind it) – indicates a potentially hazardous situation which, if not avoided, may result in minor or moderate injury.

0000001en

CAUTION

Caution without the safety alert symbol indicates a potentially hazardous situation that can cause damage to the machine, personal property and / or the environment or cause the machine to operate improperly.

0000001en

SAFETY PRECAUTIONS

DANGER



SCALD HAZARD!

- NEVER remove the radiator cap if the engine is hot. Steam and hot engine coolant will spurt out and seriously burn you. Allow the engine to cool down before you attempt to remove the radiator cap.
- Tighten the radiator cap securely after you check the radiator. Steam can spurt out during engine operation if the cap is loose.
- ALWAYS check the level of the engine coolant by observing the reserve tank.
- Failure to comply will result in death or serious injury.

0000002en

DANGER



EXPLOSION HAZARD!

- Keep the area around the battery well-ventilated. While the engine is running or the battery is charging, hydrogen gas is produced which can be easily ignited.
- Keep sparks, open flame and any other form of ignition away while the engine is running or battery is charging.
- Failure to comply will result in death or serious injury.

0000003en

DANGER



FIRE AND EXPLOSION HAZARD!

- Diesel fuel is flammable and explosive under certain conditions.
- When you remove any fuel system component to perform maintenance (such as changing the fuel filter) place an approved container under the opening to catch the fuel.
- NEVER use a shop rag to catch the fuel. Vapors from the rag are flammable and explosive.
- Wipe up any spills immediately.
- Wear eye protection. The fuel system is under pressure and fuel could spray out when you remove any fuel system component.
- Failure to comply will result in death or serious injury.

0000009en

DANGER



FIRE AND EXPLOSION HAZARD!

- Only use the key switch to start the engine.
- NEVER jump-start the engine. Sparks caused by shorting the battery to the starter terminals may cause a fire or explosion.
- Failure to comply will result in death or serious injury.

0000004en

DANGER



FIRE AND EXPLOSION HAZARD!

- Diesel fuel is flammable and explosive under certain conditions.
- NEVER remove the fuel cap with the engine running.
- Failure to comply will result in death or serious injury.

0000011en

DANGER



FIRE AND EXPLOSION HAZARD!

- Diesel fuel is flammable and explosive under certain conditions.
- NEVER use diesel fuel as a cleaning agent.
- Failure to comply will result in death or serious injury.

0000012en

DANGER



FIRE AND EXPLOSION HAZARD!

- Diesel fuel is flammable and explosive under certain conditions.
- Only fill the fuel tank with diesel fuel. Filling the fuel tank with gasoline may result in a fire and will damage the engine.
- NEVER refuel with the engine running.
- Wipe up all spills immediately.
- Keep sparks, open flames or any other form of ignition (match, cigarette, static electric source) well away when refueling.
- NEVER overfill the fuel tank.
- Fill the fuel tank. Store any containers containing fuel in a well-ventilated area, away from any combustibles or sources of ignition.
- Failure to comply will result in death or serious injury.

0000005en

DANGER



FIRE AND EXPLOSION HAZARD!

- Diesel fuel is flammable and explosive under certain conditions.
- If the unit has an electric fuel pump, when you prime the fuel system, turn the key switch to the ON position for 10 to 15 seconds to allow the electric fuel pump to prime the system.
- If the unit has a mechanical fuel pump, when you prime the fuel system, operate the fuel priming lever of the mechanical fuel pump several times until the fuel filter cup is filled with fuel.
- Failure to comply will result in death or serious injury.

0000010en

DANGER



FIRE AND EXPLOSION HAZARD!

- Diesel fuel is flammable and explosive under certain conditions.
- Be sure to place the diesel fuel container on the ground when transferring the diesel fuel from the pump to the container. Hold the hose nozzle firmly against the side of the container while filling it. This prevents static electricity buildup which could cause sparks and ignite fuel vapors.
- NEVER place diesel fuel or other flammable material such as oil, hay or dried grass close to the engine during engine operation or shortly after shutdown.
- Failure to comply will result in death or serious injury.

0000014en

DANGER



CRUSH HAZARD!

- When you need to transport an engine for repair, have a helper assist you to attach it to a hoist and load it on a truck.
- NEVER stand under a hoisted engine. If the hoist mechanism fails, the engine will fall on you, causing death or serious injury.
- Failure to comply will result in death or serious injury.

0000008en

DANGER



EXPLOSION HAZARD!

- NEVER check the remaining battery charge by shorting out the terminals. This will result in a spark and may cause an explosion or fire. Use a hydrometer to check the remaining battery charge.
- If the electrolyte is frozen, slowly warm the battery before you recharge it.
- Failure to comply will result in death or serious injury.

0000007en

⚠ WARNING



SEVER HAZARD!

- Keep hands and other body parts away from moving / rotating parts such as the cooling fan, flywheel or PTO shaft.
- Wear tight-fitting clothing and keep your hair short or tie it back while the engine is running.
- Remove all jewelry before you operate or service the machine.
- NEVER start the engine in gear. Sudden movement of the engine and / or machine could cause death or serious personal injury.
- NEVER operate the engine without the guards in place.
- Before you start the engine make sure that all bystanders are clear of the area.
- Keep children and pets away while the engine is operating.
- Check before starting the engine that any tools or shop rags used during maintenance have been removed from the area.
- Failure to comply could result in death or serious injury.

0000002en

⚠ WARNING



EXHAUST HAZARD!

- NEVER operate the engine in an enclosed area such as a garage, tunnel, underground room, manhole or ship's hold without proper ventilation.
- NEVER block windows, vents, or other means of ventilation if the engine is operating in an enclosed area. All internal combustion engines create carbon monoxide gas during operation. Accumulation of this gas within an enclosure could cause illness or even death.
- Make sure that all connections are tightened to specifications after repair is made to the exhaust system.
- Failure to comply could result in death or serious injury.

0000003en

⚠ WARNING



ALCOHOL AND DRUG HAZARD!

- NEVER operate the engine while you are under the influence of alcohol or drugs.
- NEVER operate the engine when you are feeling ill.
- Failure to comply could result in death or serious injury.

0000004en

⚠ WARNING

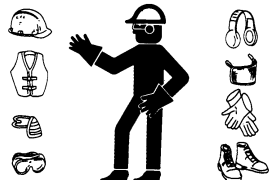

EXPOSURE HAZARD!

- Wear personal protective equipment such as gloves, work shoes, eye and hearing protection as required by the task at hand.
- NEVER wear jewelry, unbuttoned cuffs, ties or loose-fitting clothing when you are working near moving / rotating parts such as the cooling fan, flywheel or PTO shaft.
- ALWAYS tie back long hair when you are working near moving / rotating parts such as a cooling fan, flywheel, or PTO shaft.
- NEVER operate the engine while wearing a headset to listen to music or radio because it will be difficult to hear the alert signals.
- Failure to comply could result in death or serious injury.

0000005en

⚠ WARNING



BURN HAZARD!

- If you must drain the engine oil while it is still hot, stay clear of the hot engine oil to avoid being burned.
- ALWAYS wear eye protection.
- Failure to comply could result in death or serious injury.

0000011en

⚠ WARNING



BURN HAZARD!

- Batteries contain sulfuric acid. NEVER allow battery fluid to come in contact with clothing, skin or eyes. Severe burns could result. ALWAYS wear safety goggles and protective clothing when servicing the battery. If battery fluid contacts the eyes and / or skin, immediately flush the affected area with a large amount of clean water and obtain prompt medical treatment.
- Failure to comply could result in death or serious injury.

0000007en

⚠ WARNING



HIGH-PRESSURE HAZARD!

- Avoid skin contact with the high-pressure diesel fuel spray caused by a fuel system leak such as a broken fuel injection line. High-pressure fuel can penetrate your skin and result in serious injury. If you are exposed to high-pressure fuel spray, obtain prompt medical treatment.
- NEVER check for a fuel leak with your hands. ALWAYS use a piece of wood or cardboard. Have your authorized Yanmar industrial engine dealer or distributor repair the damage.
- Failure to comply could result in death or serious injury.

0000008en

⚠ WARNING



SHOCK HAZARD!

- Turn off the battery switch (if equipped) or disconnect the negative battery cable before servicing the electrical system.
- Check the electrical harnesses for cracks, abrasions, and damaged or corroded connectors. ALWAYS keep the connectors and terminals clean.
- Failure to comply could result in death or serious injury.

0000009en

⚠ WARNING



ENTANGLEMENT HAZARD!

- Stop the engine before you begin to service it.
- NEVER leave the key in the key switch when you are servicing the engine. Someone may accidentally start the engine and not realize you are servicing it. This could result in a serious injury.
- If you must service the engine while it is operating, remove all jewelry, tie back long hair, and keep your hands, other body parts and clothing away from moving / rotating parts.
- Failure to comply could result in death or serious injury.

0000010en

⚠ WARNING



BURN HAZARD!

- Wait until the engine cools before you drain the engine coolant. Hot engine coolant may splash and burn you.
- Failure to comply could result in death or serious injury.

0000016en

⚠ WARNING



To prevent possible eye injury, always wear SAFETY GLASSES while servicing the engine.

0000013en

⚠ WARNING



BURN HAZARD!

- Keep your hands and other body parts away from hot engine surfaces such as the muffler, exhaust pipe, turbocharger (if equipped) and engine block during operation and shortly after you shut the engine down. These surfaces are extremely hot while the engine is operating and could seriously burn you.
- Failure to comply could result in death or serious injury.

0000015en

⚠ WARNING



FUME / BURN HAZARD!

- Always read and follow safety related precautions found on containers of hazardous substances like parts cleaners, primers, sealants and sealant removers.
- Failure to comply could result in death or serious injury.

0000014en

⚠ CAUTION

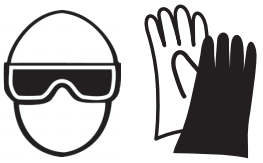

COOLANT HAZARD!

- Wear eye protection and rubber gloves when you handle long life or extended life engine coolant. If contact with the eyes or skin should occur, flush eyes and wash immediately with clean water.
- Failure to comply may result in minor or moderate injury.

0000005en

⚠ CAUTION



FLYING OBJECT HAZARD!

- ALWAYS wear eye protection when servicing the engine and when using compressed air or high-pressure water. Dust, flying debris, compressed air, pressurized water or steam may injure your eyes.
- Failure to comply may result in minor or moderate injury.

0000003en

⚠ CAUTION

Be sure to secure the engine solidly to prevent injury or damage to parts due to the engine falling during work on the engine.

0000009en

⚠ CAUTION



PINCH HAZARD!

Carefully rotate the alternator toward the cylinder block while loosening the V-belt. Failure to comply may result in minor or moderate injury.

0000014en

⚠ CAUTION

If any oil pump component clearance exceeds its limit, the oil pump must be replaced as an assembly.

0000015en

CAUTION

- Only use diesel fuels recommended by Yanmar for the best engine performance, to prevent engine damage and to comply with EPA / ARB warranty requirements.
- Only use clean diesel fuel.
- NEVER remove the primary strainer (if equipped) from the fuel tank filler port. If removed, dirt and debris could get into the fuel system causing it to clog.

0000004en

CAUTION

If any problem is noted during the visual check, the necessary corrective action should be taken before you operate the engine.

0000021en

CAUTION

NEVER hold the key in the START position for longer than 15 seconds or the starter motor will overheat.

0000007en

CAUTION

Make sure the engine is installed on a level surface. If a continuously running engine is installed at an angle greater than (IDI = 25°, DI = 30°) in any direction or if an engine runs for short periods of time (less than three minutes) at an angle greater than (IDI = 30°, DI = 35°) in any direction, engine oil may enter the combustion chamber causing excessive engine speed and white exhaust smoke. This may cause serious engine damage.

0000010enTNV

CAUTION

Protect the air cleaner, turbocharger (if equipped) and electric components from damage when you use steam or high-pressure water to clean the engine.

0000014en

CAUTION

Observe the following environmental operating conditions to maintain engine performance and avoid premature engine wear:

- Avoid operating in extremely dusty conditions.
- Avoid operating in the presence of chemical gases or fumes.
- Avoid operating in a corrosive atmosphere such as salt water spray.
- NEVER install the engine in a floodplain unless proper precautions are taken to avoid being subject to a flood.
- NEVER expose the engine to the rain.

0000003en

CAUTION

Do not loosen or remove the four bolts retaining the fuel injection pump drive gear to the fuel injection pump hub. Do not disassemble the fuel injection pump drive gear from the hub. Correct fuel injection timing will be very difficult or impossible to achieve.

0000031en

CAUTION

If the oil pump must be replaced, replace it as an assembly only. Do not replace individual components.

0000030en

CAUTION

Observe the following environmental operating conditions to maintain engine performance and avoid premature engine wear:

- The standard range of ambient temperatures for the normal operation of Yanmar engines is from +5°F (-15°C) to +113°F (+45°C).
- If the ambient temperature exceeds +113°F (+45°C) the engine may overheat and cause the engine oil to break down.
- If the ambient temperature is below +5°F (-15°C) the engine will be hard to start and the engine oil may not flow easily.
- Contact your authorized Yanmar industrial engine dealer or distributor if the engine will be operated outside of this standard temperature range.

0000065en

CAUTION

If any indicator illuminates during engine operation, stop the engine immediately. Determine the cause and repair the problem before you continue to operate the engine.

0000029en

CAUTION

- Only use the engine oil specified. Other engine oils may affect warranty coverage, cause internal engine components to seize and / or shorten engine life.
- Prevent dirt and debris from contaminating the engine oil. Carefully clean the oil cap / dipstick and the surrounding area before you remove the cap.
- NEVER mix different types of engine oil. This may adversely affect the lubricating properties of the engine oil.
- NEVER overfill. Overfilling may result in white exhaust smoke, engine overspeed or internal damage.

0000005en

CAUTION

- Only use the engine coolant specified. Other engine coolants may affect warranty coverage, cause an internal buildup of rust and scale and / or shorten engine life.
- Prevent dirt and debris from contaminating the engine coolant. Carefully clean the radiator cap and the surrounding area before you remove the cap.
- NEVER mix different types of engine coolants. This may adversely affect the properties of the engine coolant.

0000006en

CAUTION

- NEVER overfill the engine with engine oil.
- ALWAYS keep the oil level between the upper and lower lines on the oil cap / dipstick.

0000015en

CAUTION

For maximum engine life, Yanmar recommends that when shutting the engine down, you allow the engine to idle, without load, for five minutes. This will allow the engine components that operate at high temperatures, such as the turbocharger (if equipped) and exhaust system, to cool slightly before the engine itself is shut down.

0000008en

CAUTION

NEVER use an engine starting aid such as ether. Engine damage will result.

0000009en

CAUTION

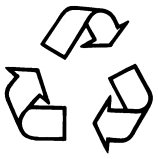

- **ALWAYS be environmentally responsible.**
- **Follow the guidelines of the EPA or other governmental agencies for the proper disposal of hazardous materials such as engine oil, diesel fuel and engine coolant. Consult the local authorities or reclamation facility.**
- **NEVER dispose of hazardous materials irresponsibly by dumping them into a sewer, on the ground, or into ground water or waterways.**
- **Failure to follow these procedures may seriously harm the environment.**

0000013en

CAUTION

New Engine Break-in:

- **On the initial engine start-up, allow the engine to idle for approximately 15 minutes while you check for proper engine oil pressure, diesel fuel leaks, engine oil leaks, coolant leaks, and for proper operation of the indicators and / or gauges.**
- **During the first hour of operation, vary the engine speed and the load on the engine. Short periods of maximum engine speed and load are desirable. Avoid prolonged operation at minimum or maximum engine speeds and loads for the next four to five hours.**
- **During the break-in period, carefully observe the engine oil pressure and engine temperature.**
- **During the break-in period, check the engine oil and coolant levels frequently.**

0000011en

CAUTION

NEVER engage the starter motor while the engine is running. This may damage the starter motor pinion and / or ring gear.

0000012en

CAUTION

- **NEVER attempt to modify the engine's design or safety features such as defeating the engine speed limit control or the fuel injection quantity control.**
- **Failure to comply may impair the engine's safety and performance characteristics and shorten the engine's life. Any alterations to this engine may affect the warranty coverage of your engine. *Yanmar Limited Warranty on page 2-3.***

0000044TNVIDISM

CAUTION

NEVER use high-pressure water or compressed air at greater than 28 psi (193 kPa; 19 686 mmAq) or a wire brush to clean the radiator fins. Radiator fins damage easily.

0000016en

CAUTION

NEVER attempt to adjust the low or high idle speed limit screw. This may impair the safety and performance of the machine and shorten its life. If the idle speed limit screws require adjustment, see your authorized Yanmar industrial engine dealer or distributor.

0000017en

CAUTION

The starter motor can be damaged if operated continuously longer than 10 seconds while performing the no-load test.

0000034en

CAUTION

The tightening torque in the *Standard Torque Chart* in *General Service Information* should be applied only to the bolts with a "7" head. (JIS strength classification: 7T)

- **Apply 60% torque to bolts that are not listed.**
- **Apply 80% torque when tightened to aluminum alloy.**



0000023enTNVIDISM

CAUTION

Establish a periodic maintenance plan according to the engine application and make sure you perform the required periodic maintenance at intervals indicated. Failure to follow these guidelines will impair the engine's safety and performance characteristics, shorten the engine's life and may affect the warranty coverage on your engine. *See Yanmar Warranties section.*

Consult your authorized Yanmar dealer or distributor for assistance when checking items marked with a ●.

0000024enTNVIDISM

CAUTION

If the fuel filter / water separator is positioned higher than the fuel level in the fuel tank, water may not drip out when the fuel filter / water separator drain cock is opened. If this happens, turn the air vent screw on the top of the fuel filter / water separator 2-3 turns counterclockwise.

Be sure to tighten the air vent screw after the water has drained out.

0000025en

CAUTION

- When the engine is operated in dusty conditions, clean the air cleaner element more frequently.
- NEVER operate the engine with the air cleaner element(s) removed. This may allow foreign material to enter the engine and damage it.

0000026en

CAUTION

The maximum air intake restriction, in terms of differential pressure measurement, must not exceed 0.90 psi (6.23 kPa; 635 mmAq). Clean or replace the air cleaner element if the air intake restriction exceeds the above mentioned value.

0000046en

CAUTION

Do not short-circuit the charging system between alternator terminals IG and L. Damage to the alternator will result.

0000035en

CAUTION

Do not connect a load between alternator terminals L and E. Damage to the alternator will result.

0000036en

CAUTION

Do not remove the positive (+) battery cable from alternator terminal B while the engine is operating. Damage to the alternator will result.

0000037en

CAUTION

Do not turn the battery switch OFF while the engine is operating. Damage to the alternator will result.

0000038en

CAUTION

Do not operate the engine if the alternator is producing unusual sounds. Damage to the alternator will result.

0000039en

CAUTION

If the engine coolant pump must be replaced, replace the engine coolant pump as an assembly only. Do not attempt to repair the engine coolant pump or replace individual components.

0000041en

CAUTION

Use a new special O-ring between the engine coolant pump and the joint. Be sure to use the special O-ring for each engine model. Although the O-ring dimensions are the same as a commercially available O-ring, the material is different.

0000042en

CAUTION

Remove or install the high-pressure fuel injection lines as an assembly whenever possible. Disassembling the high-pressure fuel injection lines from the retainers or bending any of the fuel lines will make it difficult to reinstall the fuel lines.

0000047en

CAUTION

After marking the position of the pump drive gear, do not rotate the engine crankshaft. Rotating the crankshaft will cause the fuel injection pump to become misaligned.

0000048en

CAUTION

Do not use a high-pressure wash directly on the alternator. Water will damage the alternator and result in inadequate charging.

0000049en

CAUTION

Do not reverse the positive (+) and negative (-) ends of the battery cable. The alternator diode and stator coil will be damaged.

0000050en

CAUTION

When the battery indicator goes out, it should not come on again. The battery indicator only comes on during operation if the alternator fails. However, if an LED is used in the battery indicator, the LED will shine faintly during normal operation.

0000051en

CAUTION

Using a non-specified V-belt will cause inadequate charging and shorten the belt life. Use the specified belt.

0000052en

CAUTION

Agricultural or other chemicals, especially those with a high sulfur content, can adhere to the IC regulator. This will corrode the conductor and result in battery over-charging (boiling) and charging malfunctions. Consult Yanmar before using the equipment in such an environment or the warranty is voided.

0000053en

CAUTION

Make sure that the combined total resistance of the battery cable in both directions between the starter motor and the battery is within the value indicated on the wiring diagram. The starter motor will malfunction or break down if the resistance is higher than the specified value.

0000054en

CAUTION

The starter motor is water-proofed according to JIS D 0203, R2 which protects the motor from rain or general cleaning. Do not use high-pressure wash or submerse the starter motor in water.

0000055en

CAUTION

Use a specialized battery charger to recharge a battery with a voltage of 8 volts or less. Booster starting a battery with a voltage of 8 volts or less will generate an abnormally high voltage and destroy electrical equipment.

0000056en

CAUTION

Make sure that the combined total resistance of the battery cable in both directions between the starter motor and the battery is within the value indicated in the *Battery Cable Resistance chart* in the *Electric Wiring Section* of this manual. The starter motor will malfunction and fail if the resistance is higher than the specified value.

0000057en

CAUTION

Removing the battery cables or the battery while the engine is operating may cause damage to the current limiter depending on the electrical equipment being used. This situation could cause loss of control of output voltage. The continuous high voltage of 23-24 volts (for 5000 rpm dynamo) will damage the current limiter and other electrical equipment.

0000058en

CAUTION

Reversing the battery cable connections at the battery or on the engine will destroy the SCR diode in the current limiter. This will cause the charging system to malfunction and may cause damage to the electrical harnesses.

0000059en

CAUTION

It is important to perform daily checks.

Periodic maintenance prevents unexpected downtime, reduces the number of accidents due to poor machine performance and helps extend the life of the engine.

0000060en

CAUTION

- NEVER attempt to modify the engine's design or safety features such as defeating the engine speed limit control or the diesel fuel injection quantity control.
- Modifications may impair the engine's safety and performance characteristics and shorten the engine's life. Any alterations to this engine may void its warranty. Be sure to use Yanmar genuine replacement parts.

0000079en

CAUTION

Identify all parts and their location using an appropriate method. It is important that all parts are returned to the same position during the reassembly process.

0000080en

CAUTION

Do not rotate the crankshaft with the injection pump removed.

0000083en

CAUTION

Keep the piston pin parts, piston assemblies, and connecting rod assemblies together to be returned to the same position during the reassembly process. Label the parts using an appropriate method.

0000088en

CAUTION

Do not allow the honing tool to operate in one position for any length of time. Damage to the cylinder wall will occur. Keep the tool in constant up-and-down motion.

0000090en

CAUTION

Any part which is found defective as a result of inspection or any part whose measured value does not satisfy the standard or limit must be replaced.

0000119en

CAUTION

Any part determined to not meet the service standard or limit before the next service, as determined from the state of current rate of wear, should be replaced even though the part currently meets the service standard limit.

0000120en

CAUTION

Never use a steel wire brush to clean fuel injectors. Damage to the nozzle and other components is likely to result.

0000172en

CAUTION

- **NEVER remove or attempt to remove the tamper-proof devices from the full-load fuel adjusting screw or the high-speed throttle limit screw on the fuel injection pump and governor assembly. These adjustments have been made at the factory to meet all applicable emissions regulations and then sealed.**
- **NEVER attempt to make any adjustments to these sealed adjustment screws. If adjustments are required, they can be made only by a qualified fuel injection shop that will ensure the injection pump continues to meet all applicable emissions regulations and then replace the tamper-proof seals.**
- **Tampering with or removing these devices may void the "Yanmar Limited Warranty."**

0000146en

CAUTION

The fuel return line is a one-piece assembly. Use care not to bend or twist the fuel return line.

0000171en

Section 4

GENERAL SERVICE INFORMATION

Page

Component Identification 4-3
Location of Labels 4-4
EPA / ARB Emission Control Regulations - USA Only 4-4
Emission Control Labels 4-4
- EPA / ARB Labels 4-5

The 97/68/EC Directive Certified Engines 4-5
Engine Family 4-5
Function of Major Engine Components 4-6
Function of Cooling System Components 4-8
Diesel Fuel 4-9
- Diesel Fuel Specifications 4-9
- Filling the Fuel Tank 4-10
- Priming the Fuel System 4-12

Engine Oil 4-13
- Engine Oil Specifications 4-13
- Service Categories 4-13
- Engine Oil Viscosity 4-14
- Checking Engine Oil 4-14
- Adding Engine Oil 4-14
- Engine Oil Capacity (Typical) 4-15

Engine Coolant 4-15
- Engine Coolant Specifications 4-16
- Filling Radiator with Engine Coolant 4-16
- Engine Coolant Capacity (Typical) 4-17

Specifications 4-18
- Description of Model Number 4-18
- Engine General Specifications 4-19

Principal Engine Specifications 4-20
3TNV72 4-20
Engine Service Information 4-21
Tightening Torques for Standard Bolts and Nuts 4-22
Abbreviations and Symbols 4-24
Abbreviations 4-24
Symbols 4-24
Unit Conversions 4-25
Unit Prefixes 4-25
Units of Length 4-25
Units of Volume 4-25
Units of Mass 4-25
Units of Force 4-25
Units of Torque 4-25
Units of Pressure 4-25
Units of Power 4-25
Units of Temperature 4-25

COMPONENT IDENTIFICATION

Figure 4-1 shows where major engine components are located.

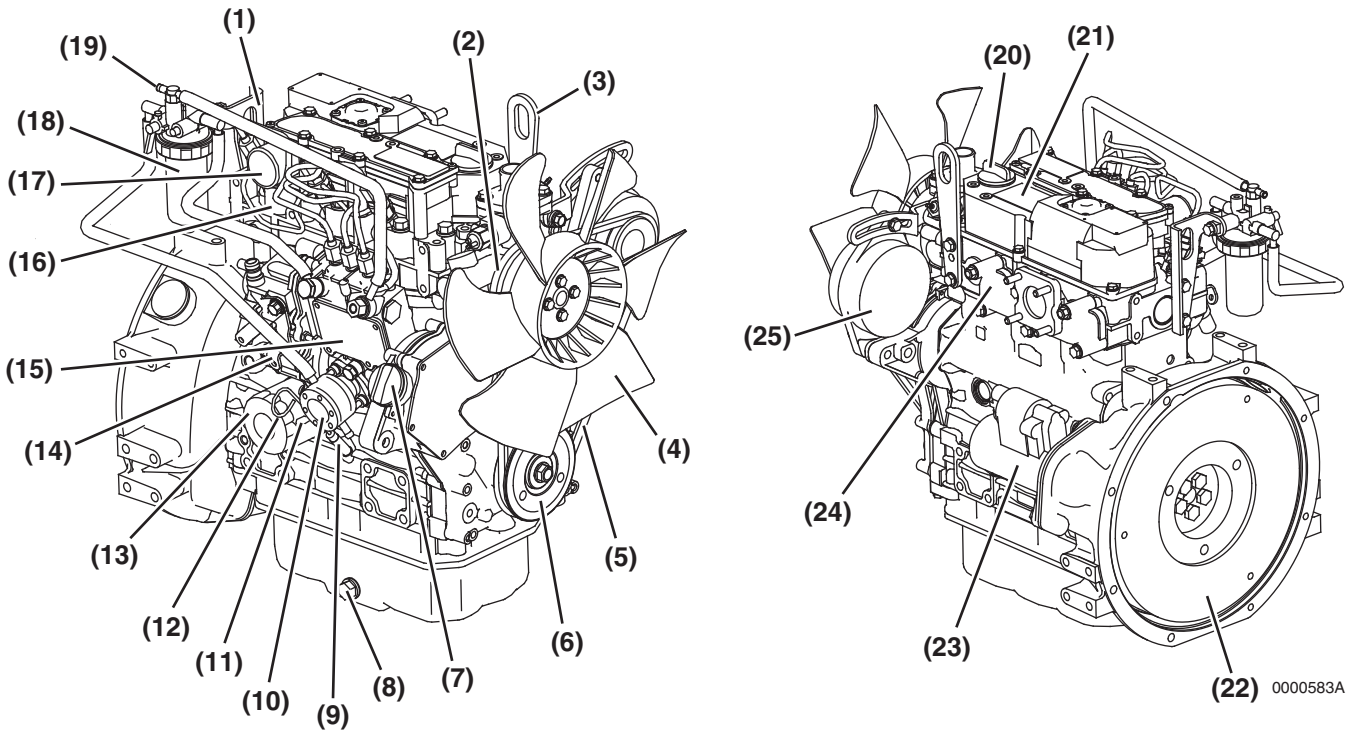

Figure 4-1

1 – Lifting Eye (Flywheel End)
2 – Engine Coolant Pump
3 – Lifting Eye (Engine Cooling Fan End)
4 – Engine Cooling Fan
5 – V-Belt
6 – Crankshaft V-Pulley
7 – Side Filler Port (Engine Oil)
8 – Drain Plug (Engine Oil)*
9 – Fuel Inlet
10 – Mechanical Fuel Pump (If Equipped)
11 – Fuel Priming Lever
12 – Dipstick (Engine Oil)
13 – Engine Oil Filter
14 – Governor Lever
15 – Fuel Injection Pump
16 – Intake Manifold
17 – Air Intake Port (From Air Cleaner)
18 – Fuel Filter
19 – Fuel Return To Fuel Tank
20 – Top Filler Port (Engine Oil)
21 – Rocker Arm Cover
22 – Flywheel
23 – Starter Motor
24 – Exhaust Manifold
25 – Alternator

* Engine oil drain plug location may vary based on oil pan options.

LOCATION OF LABELS

Figure 4-2 shows the location of regulatory and safety labels on Yanmar TNV series engines.

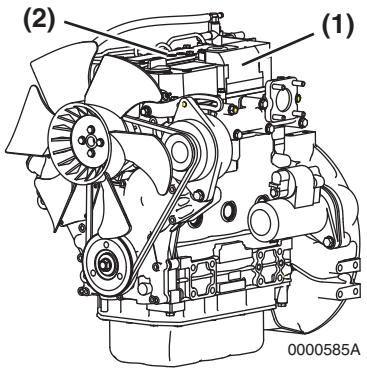

Figure 4-2

The typical location of the emission control information label is shown **(Figure 4-2, (1))**.

Typical location of the engine nameplate is shown **(Figure 4-2, (2))**.

Engine Nameplate (Typical)

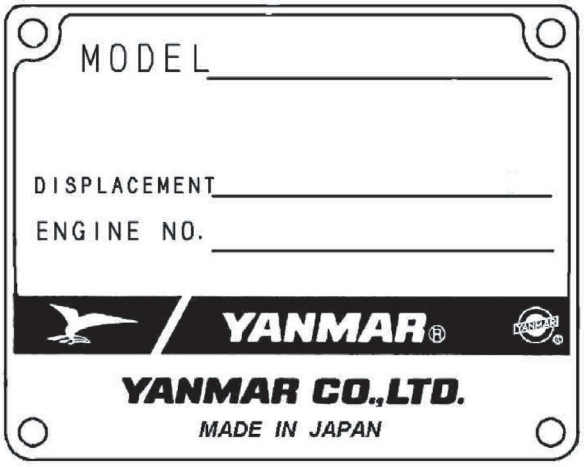

EPA / ARB EMISSION CONTROL REGULATIONS - USA ONLY

Yanmar TNV engines meet Environmental Protection Agency (EPA) (U. S. Federal) emission control standards as well as the California Air Resources Board (ARB, California) regulations. Only engines that conform to ARB regulations can be sold in the State of California.

Refer to the specific EPA / ARB installation *(page 5-16)* and maintenance *(page 5-16)* in the *Periodic Maintenance* section of this manual. Also refer to the *Yanmar Co., Ltd. Limited Emission Control System Warranty - USA Only Yanmar Co., Ltd. Limited Emission Control System Warranty - USA Only on page 2-6.*

EMISSION CONTROL LABELS

Since emission control regulations are being issued on a global basis, it is necessary to identify which regulations a particular engine complies with. We have listed several different types of labels you might find on your engine.

EPA / ARB Labels (Typical)

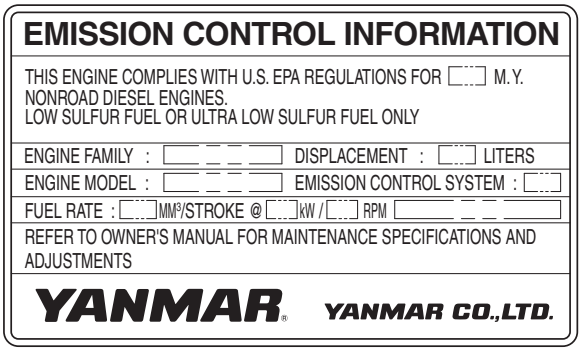

(EPA) Less Than 50 HP SAE (37kW)

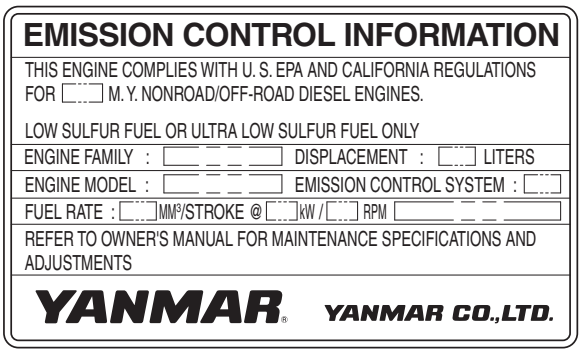

(EPA & ARB)

ENGINE FAMILY

The EPA / ARB labels and the 97/68/EC label all have an *Engine Family* field. The following is an explanation of the *Engine Family* designation:

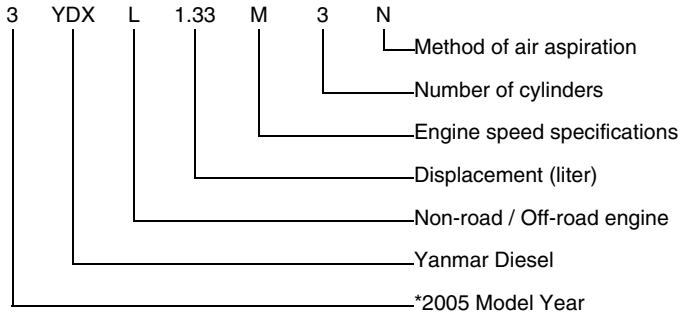

5*: 2005

6 : 2006

7 : 2007

THE 97/68/EC DIRECTIVE CERTIFIED ENGINES

The engines described in this manual have been certified by the 97/68/EC Directive.

To identify the engines that meet this certification, the 97/68/EC emission control label is affixed on the engines.

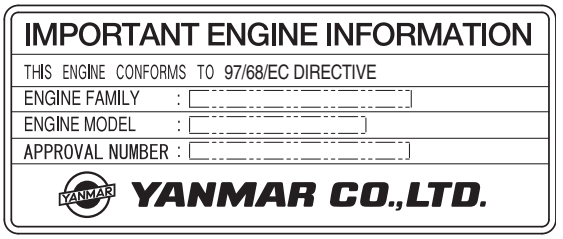

(97/68/EC)

FUNCTION OF MAJOR ENGINE COMPONENTS

Component	Function
Air Cleaner	The air cleaner prevents airborne contaminants from entering the engine. Since the air cleaner is application specific, it must be carefully selected by an application engineer. It is not part of the basic engine package as shipped from the Yanmar factory. Periodic replacement of the air cleaner filter element is necessary. See the *Periodic Maintenance Schedule on page 5-16* for the replacement frequency.
Dynamo	The dynamo is driven by a V-belt which is powered by the crankshaft V-pulley. The dynamo supplies electricity to the engine systems and charges the battery while the engine is running.
Dipstick (Engine Oil)	The engine oil dipstick is used to determine the amount of engine oil in the crankcase.
Electric Fuel Pump	The electric fuel pump makes sure there is a constant supply of diesel fuel to the fuel injection pump. The electric fuel pump is electro-magnetic and runs on 12 VDC. An electric fuel pump may be installed as standard equipment based on engine model and specification. If an electric fuel pump is installed, turn the key switch to the ON position for 10 to 15 seconds to prime the fuel system.
Engine Oil Filter	The engine oil filter removes contaminants and sediments from the engine oil. Periodic replacement of the engine oil filter is necessary. *See the Periodic Maintenance Schedule on page 5-16* for the replacement frequency.
Fuel Filter	The fuel filter removes contaminants and sediments from the diesel fuel. Periodic replacement of the fuel filter is necessary. See the *Periodic Maintenance Schedule on page 5-16* for the replacement frequency. **Please note that the word “diesel” is implied throughout this manual when the word “fuel” is used.**
Fuel Filter / Water Separator	The fuel filter / water separator removes contaminants, sediments and water from diesel fuel going to the fuel filter. This is a required component of the fuel system. This is standard equipment with every engine. The separator is installed between the fuel tank and the fuel pump. Periodically drain the water from the fuel filter / water separator using the drain cock at the bottom of the separator.
Fuel Priming Lever	If the unit has a mechanical fuel pump, a fuel priming lever on the mechanical fuel pump primes the fuel system. The fuel system needs to be primed before you start the engine for the first time, if you run out of fuel, or if fuel system service is performed. To prime the fuel system, operate the fuel priming lever until the cup in the fuel filter is full of fuel.

Component	Function
Fuel Tank	The fuel tank is a reservoir that holds diesel fuel. When fuel leaves the fuel tank it goes to the fuel filter / water separator. Next, fuel is pumped to the fuel filter by the fuel pump. Next the fuel goes to the fuel injection pump. Since fuel is used to keep the fuel injection pump cool and lubricated, more fuel than necessary enters the injection pump. When the injection pump pressure reaches a preset value, a relief valve allows excess fuel to be returned back to the fuel tank. The fuel tank is a required engine component.
Mechanical Fuel Pump	The mechanical fuel pump is a diaphragm type of pump and is installed on the fuel injection pump body. The mechanical fuel pump is standard equipment on some engine models and is driven by a cam on the camshaft of the fuel injection pump. The mechanical fuel pump is not installed on the fuel injection pump if the electric fuel pump is installed.
Side and Top Filler Port (Engine Oil)	You can fill the crankcase with engine oil from ***either the side or top filler port*** depending upon which one is most convenient.
Starter Motor	The starter motor is powered by the battery. When you turn the key switch in the operator's console to the START position, the starter motor engages with the ring gear installed on the flywheel and starts the flywheel in motion.

FUNCTION OF COOLING SYSTEM COMPONENTS

Component	Function
Cooling System	The TNV engine is liquid-cooled by means of a cooling system. The cooling system consists of a radiator, radiator cap, engine cooling fan, engine coolant pump, thermostat, and reserve tank. ***Note that all cooling system components are required for proper engine operation. Since some of the components are application specific, they must be carefully selected by an application engineer. The application specific items are not part of the basic engine package as shipped from the Yanmar factory.***
Engine Cooling Fan	The engine cooling fan is driven by a V-belt which is powered by the crankshaft V-pulley. The purpose of the engine cooling fan is to circulate air through the radiator.
Engine Coolant Pump	The engine coolant pump circulates the engine coolant through the cylinder block and cylinder head and returns the engine coolant to the radiator.
Radiator	The radiator acts as a heat exchanger. As the engine coolant circulates through the cylinder block it absorbs heat. The heat in the engine coolant is dissipated in the radiator. As the engine cooling fan circulates air through the radiator, the heat is transferred to the air.
Radiator Cap	The radiator cap controls the cooling system pressure. The cooling system is pressurized to raise the boiling point of the engine coolant. As the engine coolant temperature rises, the system pressure and the coolant volume increases. When the pressure reaches a preset value, the release valve in the radiator cap opens and the excess engine coolant flows into the reserve tank. As the engine coolant temperature is reduced, the system pressure and volume is reduced and the vacuum valve in the radiator cap opens allowing engine coolant to flow from the reserve tank back into the radiator.
Reserve Tank	The reserve tank contains the overflow of engine coolant from the radiator. If you need to add engine coolant to the system, add it to the reserve tank, not to the radiator.
Thermostat	A thermostat is placed in the cooling system to prevent engine coolant from circulating into the radiator until the engine coolant temperature reaches a preset temperature. When the engine is cold, no engine coolant flows through the radiator. Once the engine reaches its operating temperature the thermostat opens. By letting the engine warm up as quickly as possible, the thermostat reduces engine wear, deposits and emissions.

DIESEL FUEL

Diesel Fuel Specifications

Diesel fuel should comply with the following specifications. The table lists several worldwide specifications for diesel fuels.

Diesel Fuel Specification	Location
No. 2-D, No. 1-D, ASTM D975-94	USA
EN590:96	European Union
ISO 8217 DMX	International
BS 2869-A1 or A2	United Kingdom
JIS K2204 Grade No. 2	Japan
KSM-2610	Korea
GB252	China

Additional Technical Fuel Requirements

- The fuel cetane number should be equal to 45 or higher.
- The sulfur content must not exceed 0.5% by volume. Less than 0.05% is preferred. Especially in U.S.A. and Canada, Low Sulfur (300-500mg/kg sulfur content) or Ultra Low Sulfur fuel should be used.
- Bio-Diesel fuels. *See Bio-Diesel Fuels on page 4-9.*
- NEVER mix kerosene, used engine oil, or residual fuels with the diesel fuel.
- Water and sediment in the fuel should not exceed 0.05% by volume.
- Keep the fuel tank and fuel-handling equipment clean at all times.
- Poor quality fuel can reduce engine performance and / or cause engine damage.
- Fuel additives are not recommended. Some fuel additives may cause poor engine performance. Consult your Yanmar representative for more information.
- Ash content not to exceed 0.01% by volume.
- Carbon residue content not to exceed 0.35% by volume. Less than 0.1% is preferred.
- Total aromatics content should not exceed 35% by volume. Less than 30% is preferred.
- PAH (polycyclic aromatic hydrocarbons) content should be below 10% by volume.
- Metal content of Na, Mg, Si, and Al should be equal to or lower than 1 mass ppm. (Test analysis method JPI-5S-44-95)
- Lubricity: Wear mark of WS1.4 should be Max. 0.018 in. (460 µm) at HFRR test.

Bio-Diesel Fuels

In Europe and in the United States, as well as some other countries, non-mineral oil based fuel resources such as RME (Rapeseed Methyl Ester) and SOME (Soybean Methyl Ester), collectively known as FAME (Fatty Acid Methyl Esters), are being used as extenders for mineral oil derived diesel fuels.

Yanmar approves the use of bio-diesel fuels that do not exceed a blend of 5% (by volume) of FAME with 95% (by volume) of approved mineral oil derived diesel fuel. Such bio-diesel fuels are known in the marketplace as B5 diesel fuels.

These B5 diesel fuels must meet certain requirements.

1. The bio-fuels must meet the minimum specifications for the country in which they are used.
   - In Europe, bio-diesel fuels must comply with the European Standard EN14214.
   - In the United States, bio-diesel fuels must comply with the American Standard ASTM D-6751.
2. Bio-fuels should be purchased only from recognized and authorized diesel fuel suppliers.

Precautions and concerns regarding the use of bio-fuels:

1. Free methanol in FAME may result in corrosion of aluminum and zinc FIE components.
2. Free water in FAME may result in plugging of fuel filters and increased bacterial growth.
3. High viscosity at low temperatures may result in fuel delivery problems, injection pump seizures, and poor injection nozzle spray atomization.
4. FAME may have adverse effects on some elastomers (seal materials) and may result in fuel leakage and dilution of the engine lubricating oil.
5. Even bio-diesel fuels that comply with a suitable standard as delivered, will require additional care and attention to maintain the quality of the fuel in the equipment or other fuel tanks. It is important to maintain a supply of clean, fresh fuel. Regular flushing of the fuel system, and / or fuel storage containers, may be necessary.
6. The use of bio-diesel fuels that do not comply with the standards as agreed to by the diesel engine manufacturers and the diesel fuel injection equipment manufacturers, or bio-diesel fuels that have degraded as per the precautions and concerns above, may affect the warranty coverage of your engine. *See Yanmar Limited Warranty on page 2-3*.

Filling the Fuel Tank

⚠ DANGER



FIRE AND EXPLOSION HAZARD!

- **Diesel fuel is flammable and explosive under certain conditions.**
- **Only fill the fuel tank with diesel fuel. Filling the fuel tank with gasoline may result in a fire and will damage the engine.**
- **NEVER refuel with the engine running.**
- **Wipe up all spills immediately.**
- **Keep sparks, open flames or any other form of ignition (match, cigarette, static electric source) well away when refueling.**
- **NEVER overfill the fuel tank.**
- **Fill the fuel tank. Store any containers containing fuel in a well-ventilated area, away from any combustibles or sources of ignition.**
- **Failure to comply will result in death or serious injury.**

0000005en

⚠ DANGER



FIRE AND EXPLOSION HAZARD!

- Diesel fuel is flammable and explosive under certain conditions.
- Be sure to place the diesel fuel container on the ground when transferring the diesel fuel from the pump to the container. Hold the hose nozzle firmly against the side of the container while filling it. This prevents static electricity buildup which could cause sparks and ignite fuel vapors.
- NEVER place diesel fuel or other flammable material such as oil, hay or dried grass close to the engine during engine operation or shortly after shutdown.
- Failure to comply will result in death or serious injury.

0000014en

⚠ DANGER



FIRE AND EXPLOSION HAZARD!

- Diesel fuel is flammable and explosive under certain conditions.
- Before you operate the engine, check for fuel leaks. Replace rubberized fuel hoses every two years or every 2000 hours of engine operation, whichever comes first, even if the engine has been out of service. Rubberized fuel lines tend to dry out and become brittle after two years or 2000 hours of engine operation, whichever comes first.
- Failure to comply will result in death or serious injury.

0000015en

CAUTION

- Only use diesel fuels recommended by Yanmar for the best engine performance, to prevent engine damage and to comply with EPA / ARB warranty requirements.
- Only use clean diesel fuel.
- NEVER remove the primary strainer (if equipped) from the fuel tank filler port. If removed, dirt and debris could get into the fuel system causing it to clog.

0000004en

Note that a typical fuel tank is shown. The fuel tank on the equipment being serviced may be different.

1. Clean the area around the fuel cap **(Figure 4-3, (1))**.
2. Remove the fuel cap **(Figure 4-3, (1))** from the fuel tank **(Figure 4-3, (2))**.
3. Observe the fuel level sight gauge **(Figure 4-3, (3))** and stop fueling when gauge shows fuel tank is full. NEVER overfill the fuel tank.
4. Replace the fuel cap and hand-tighten. Over tightening the fuel cap will damage it.

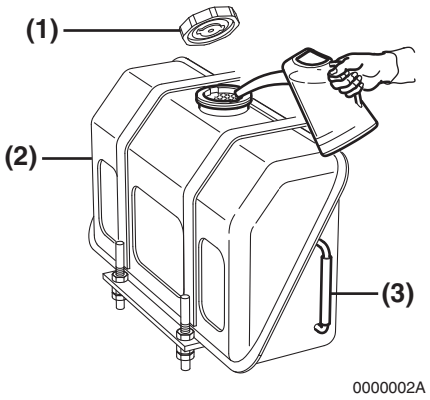

Figure 4-3

Priming the Fuel System

DANGER



FIRE AND EXPLOSION HAZARD!

- **Diesel fuel is flammable and explosive under certain conditions.**
- **If the unit has an electric fuel pump, when you prime the fuel system, turn the key switch to the ON position for 10 to 15 seconds to allow the electric fuel pump to prime the system.**
- **If the unit has a mechanical fuel pump, when you prime the fuel system, operate the fuel priming lever of the mechanical fuel pump several times until the fuel filter cup is filled with fuel.**
- **Failure to comply will result in death or serious injury.**

0000010en

The fuel system needs to be primed under certain conditions:

- Before starting the engine for the first time
- After running out of fuel and fuel has been added to the fuel tank
- After fuel system maintenance such as changing the fuel filter and draining the fuel filter / water separator, or replacing a fuel system component

To prime the fuel system if an electric fuel pump is installed:

1. Turn the key to the ON position for 10 to 15 seconds. This will allow the electric fuel pump to prime the fuel system.
2. NEVER use the starter motor to prime the fuel system. This may cause the starter motor to overheat and damage the coils, pinion and / or ring gear.

To prime the fuel system if a mechanical fuel pump is installed:

1. Operate the fuel priming lever **(Figure 4-4, (1))** several times until the fuel filter cup **(Figure 4-4, (2))** is filled with fuel.
2. NEVER use the starter motor to prime the fuel system. This may cause the starter motor to overheat and damage the coils, pinion and / or ring gear.

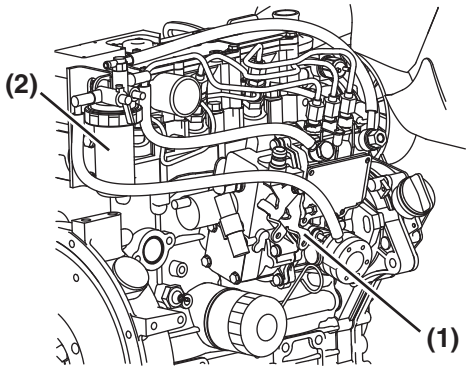

Figure 4-4

ENGINE OIL

CAUTION

- **Only use the engine oil specified. Other engine oils may affect warranty coverage, cause internal engine components to seize and / or shorten engine life.**
- **Prevent dirt and debris from contaminating the engine oil. Carefully clean the oil cap / dipstick and the surrounding area before you remove the cap.**
- **NEVER mix different types of engine oil. This may adversely affect the lubricating properties of the engine oil.**
- **NEVER overfill. Overfilling may result in white exhaust smoke, engine overspeed or internal damage.**

0000005en

Engine Oil Specifications

Use an engine oil that meets or exceeds the following guidelines and classifications:

Service Categories

- API Service Categories CD or higher
- ACEA Service Categories E-3, E-4, and E-5
- JASO Service Category DH-1

Definitions

- API Classification (American Petroleum Institute)
- ACEA Classification (Association des Constructeurs Européens d'Automobilies)
- JASO (Japanese Automobile Standards Organization)

Note:

1. Be sure the engine oil, engine oil storage containers, and engine oil filling equipment are free of sediments and water.

2. Change the engine oil after the first 50 hours of operation and then every 250 hours thereafter.
3. Select the oil viscosity based on the ambient temperature where the engine is being operated. See the SAE Service Grade Viscosity Chart **(Figure 4-5)**.
4. Yanmar does not recommend the use of engine oil “additives.”

Additional Technical Engine oil Requirements:

The engine oil must be changed when the Total Base Number (TBN) has been reduced to 1.0 (mgKOH/g) test method; JIS K-201-5.2-2 (HCl), ASTM D4739 (HCl).

Engine Oil Viscosity

Select the appropriate engine oil viscosity based on the ambient temperature and use the SAE Service Grade Viscosity Chart in **Figure 4-5**.

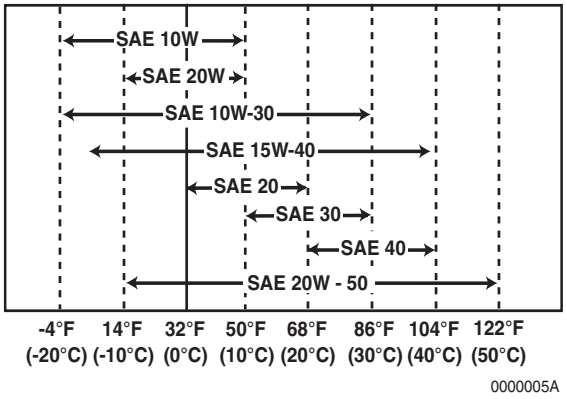

Figure 4-5

Checking Engine Oil

1. Make sure engine is level.
2. Remove dipstick **(Figure 4-6, (1))** and wipe with clean cloth.
3. Fully reinsert dipstick.
4. Remove dipstick. The oil level should be between upper **(Figure 4-6, (2))** and lower **(Figure 4-6, (3))** lines on the dipstick.
5. Fully reinsert dipstick.

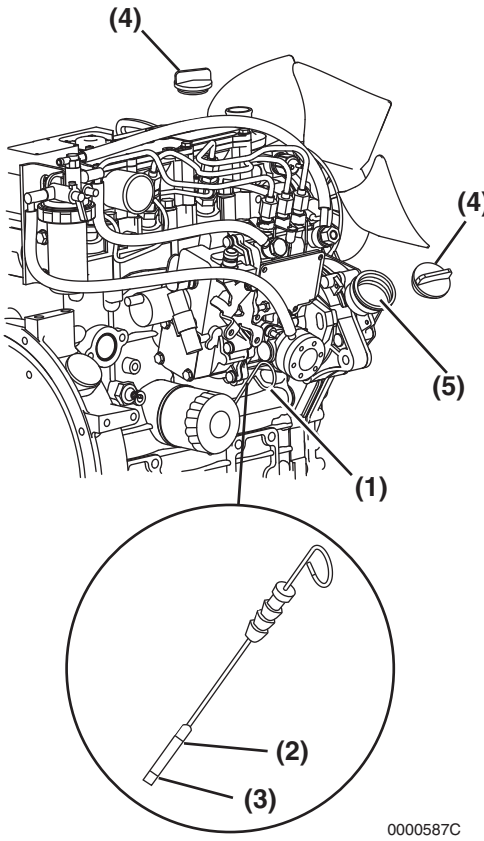

Figure 4-6

Adding Engine Oil

1. Make sure engine is level.
2. Remove oil cap **(Figure 4-6, (4))**.
3. Add indicated amount of engine oil at the top or side engine oil filler port **(Figure 4-6, (5))**.
4. Wait three minutes and check oil level.
5. Add more oil if necessary.
6. Replace oil cap **(Figure 4-6, (4))** and hand-tighten. Over-tightening may damage the cap.

Engine Oil Capacity (Typical)

Note: These are the engine oil capacities associated with a “deep standard” oil pan. Oil capacity will vary dependant upon which optional oil pan is used. Refer to the operation manual provided by the driven machine manufacturer for the actual engine oil capacity of your machine.

The following are the engine oil capacities for various Yanmar TNV engines:

Engine Model	Dipstick Upper Limit/ Lower Limit
3TNV72	2.5 / 1.5qt (2.4 / 1.4L)

ENGINE COOLANT

DANGER



SCALD HAZARD!

- **NEVER remove the radiator cap if the engine is hot. Steam and hot engine coolant will spurt out and seriously burn you. Allow the engine to cool down before you attempt to remove the radiator cap.**
- **Tighten the radiator cap securely after you check the radiator. Steam can spurt out during engine operation if the cap is loose.**
- **ALWAYS check the level of the engine coolant by observing the reserve tank.**
- **Failure to comply will result in death or serious injury.**

0000002en

WARNING



BURN HAZARD!

- **Wait until the engine cools before you drain the engine coolant. Hot engine coolant may splash and burn you.**
- **Failure to comply could result in death or serious injury.**

0000016en

⚠ CAUTION

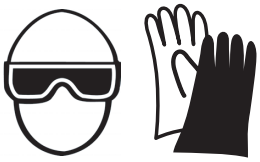

COOLANT HAZARD!

- **Wear eye protection and rubber gloves when you handle long life or extended life engine coolant. If contact with the eyes or skin should occur, flush eyes and wash immediately with clean water.**
- **Failure to comply may result in minor or moderate injury.**

0000005en

CAUTION

- **Only use the engine coolant specified. Other engine coolants may affect warranty coverage, cause an internal buildup of rust and scale and / or shorten engine life.**
- **Prevent dirt and debris from contaminating the engine coolant. Carefully clean the radiator cap and the surrounding area before you remove the cap.**
- **NEVER mix different types of engine coolants. This may adversely affect the properties of the engine coolant.**

0000006en

Engine Coolant Specifications

Use a Long Life Coolant (LLC) or an Extended Life Coolant (ELC) that meets or exceeds the following guidelines and specifications:

Additional Technical Coolant Specifications:

- ASTM D6210, D4985 (US)
- JIS K-2234 (Japan)
- SAE J814C, J1941, J1034 or J2036 (International)

Alternative Engine Coolant

If an Extended or Long Life Coolant is not available, you may use an ethylene glycol or propylene glycol based conventional coolant (green).

Notes:

1. ALWAYS use a mix of coolant and water. NEVER use water only.
2. Mix coolant and water per the mixing instructions on the coolant container.
3. Water quality is important to coolant performance. Yanmar recommends that soft, distilled, or demineralized water be used to mix with coolants.
4. NEVER mix extended or long life coolants and conventional (green) coolants.
5. NEVER mix different types and / or colors of extended life coolants.
6. Replace the coolant every 1000 engine hours or once a year.

Filling Radiator with Engine Coolant

Fill the radiator and reserve tank as follows. This procedure is for filling the radiator for the first time or refilling it after it is flushed. Note that a typical radiator is illustrated.

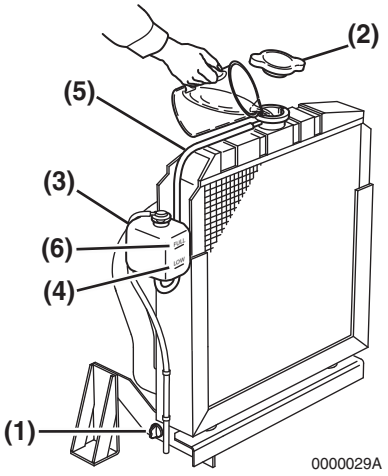

Figure 4-7

1. Check to be sure the radiator drain plug is installed and tightened or the drain cock **(Figure 4-7, (1))** is closed. Also make sure the coolant drain plug **(Figure 4-8, (1))** in the cylinder block is closed.

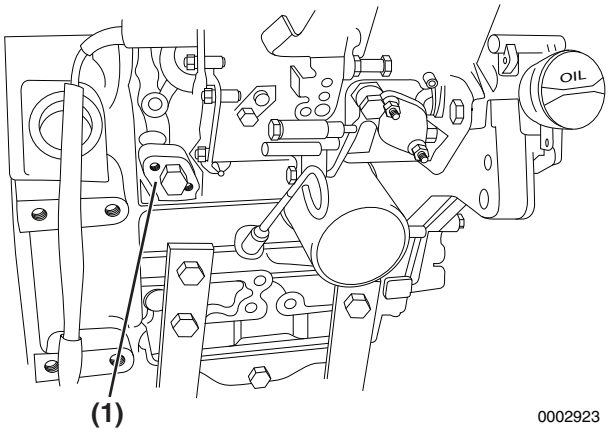

Figure 4-8

2. Remove the radiator cap **(Figure 4-7, (2))** by turning it counterclockwise about 1/3 of a turn.
3. Pour the engine coolant *slowly* into the radiator until it is even with the lip of the engine coolant filler port. Make sure that air bubbles do not develop as you fill the radiator.
4. Reinstall the radiator cap **(Figure 4-7, (2))**. Align the tabs on the back of the radiator cap with the notches on the engine coolant filler port. Press down and turn the cap clockwise about 1/3 of a turn.
5. Remove the cap of the reserve tank **(Figure 4-7, (3))**, and fill it to the LOW (COLD) mark **(Figure 4-7, (4))** with engine coolant. Reinstall the cap.
6. Check the hose **(Figure 4-7, (5))** that connects the reserve tank **(Figure 4-7, (3))** to the radiator. Be sure it is securely connected and there are no cracks or damage. If the hose is damaged, engine coolant will leak out instead of going into the reserve tank.
7. Run the engine until it is at operating temperature. Check the level of engine coolant in the reserve tank. When the engine is running and the engine coolant is at normal temperature, the coolant level in the tank should be at or near the FULL (HOT) mark **(Figure 4-7, (6))**. If the engine coolant is not at the FULL (HOT) mark **(Figure 4-7, (6))**, add additional engine coolant to the reserve tank to bring the level to the FULL (HOT) mark.

Engine Coolant Capacity (Typical)

Note: Capacities listed are for engine only without a radiator. Refer to the operation manual provided by the driven machine manufacturer for actual engine coolant capacity on your machine.

The following are the engine coolant capacities for various Yanmar TNV engines.

Engine Model	Engine Coolant Capacity
3TNV72	1.0 qt (0.9 L)

SPECIFICATIONS

Description of Model Number

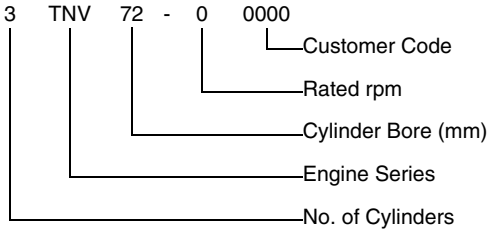

When ordering parts or making an inquiry about the engine you are working on, be sure to include the complete model and serial numbers as shown on the engine nameplate. *See Location of Labels on page 4-4.*

Engine General Specifications

Type	Vertical In-line, Water Cooled, 4-Cycle Diesel Engine
Combustion System	Swirl Chamber (Ball Type)
Starting System	Electric Starting
Cooling System	Radiator
Lubricating System	Forced Lubrication with Trochoid Pump
PTO Position	Flywheel End
Direction of Rotation	Counterclockwise Viewed from Flywheel End

Note: The information described in *Principal Engine Specifications* is for a “standard” engine. To obtain the information for the engine installed in your driven machine, please refer to the manual provided by the driven machine manufacturer. Engine rating conditions are as follows (SAE J1349, ISO 3046/1):

- Atmospheric Condition: Room temperature 77°F (25°C), Atmospheric pressure 29.53 in Hg (100 kPa, 750 mm Hg), Relative humidity 30%
- Fuel Temperature at Fuel Injector Pump Inlet: 104°F (40°C)
- With Cooling Fan, Air Cleaner, Muffler: Yanmar Standard
- After Engine Break-In Period; Output Allowable Deviation: ± 3%
- 1 PS = 0.7355 kW
- 1 hp SAE (Society of Automotive Engineers) = 0.7457 kW

PRINCIPAL ENGINE SPECIFICATIONS

3TNV72

Engine Model	3TNV72	
Version	VH	
Type	Vertical In-line Diesel Engine	
Combustion System	Ball-Type Swirl Chamber	
Aspiration	Natural	
No. of Cylinders	3	
Bore × Stroke	2.835 x 2.913in. (72 x 74mm)	
Displacement	55.104 cu in. (0.903L)	
Max. Rated Output (Net)	RPM (min^{-1})	3300
	hp SAE	20.1
	kW	15.0
	PS	20.4
High Idling	RPM (min^{-1})	3520 ± 25
Engine Weight (Dry) with Flywheel Housing	178.6lb (81kg)	
PTO Position	Flywheel End	
Direction of Rotation	Counterclockwise Viewed from Flywheel End	
Cooling System	Liquid-Cooled with Radiator	
Lubricating System	Forced Lubrication with Trochoid Pump	
Normal Oil Pressure at Rated Engine Speed	42 - 64 psi (0.29 -0.44 MPa, 2.96 - 4.49 kgf/cm^2)	
Normal Oil Pressure at Low Idle Speed	8.5 psi (0.06 MPa, 0.6 kgf/cm^2) or greater	
Starting System	Electric Starting - Starter Motor: DC12V, 1.6hp (1.2kW)	
	Dynamo: DC12V, 40A	
	Recommended Battery Capacity: 12V, 36 Amp-Hour (5h rating)	
Dimensions (L × W × H)*	19.53 x 17.36 x 24.84 in. (496 x 441 x 631 mm)	
Engine Oil Pan Capacity	2.5 / 1.5 qt (2.4 / 1.4 L) (Dipstick Upper Limit / Lower Limit)	
Engine Coolant Capacity	0.2 gal (0.9 L) Engine Only	
Standard Cooling Fan	11.81 in. (300 mm) O.D., 5 Blade Puller-Type	

* *Engine specifications without radiator*

ENGINE SERVICE INFORMATION

Inspection Item		Standard	Limit
Intake / Exhaust Valve Gap		0.006 - 0.010 in (0.15 - 0.25 mm)	-
Fuel Injection Timing	*See Checking and Adjusting Fuel Injection Timing on page 7-19*		
Fuel Injection Pressure		1711 - 1842 psi (11.8 - 12.8 MPa; 120 - 130 kgf / cm^2)	-
Compression Pressure at 250 rpm (250 min^{-1})	3TNV72	470 ± 15 psi (3.24 ± 0.1MPa; 33 ± 1 kgf / cm^2)	370 ± 15 psi (2.55 ± 0.1 MPa; 26 ± 1 kgf / cm^2)
Lubricating Oil Pressure	At rated output	42 - 64 psi (0.29 - 0.44 MPa; 2.96 - 4.49 kgf/cm^2)	-
	When idling	8.5 psi (0.06 MPa; 0.6 kgf/cm^2) or greater	-
Thermostat		Valve Opening Temperature	Full Opening Lift Temperature
		157 - 163°F (70 - 73°C)	0.32 in. (8 mm) or Above 185°F (85°C)
Temperature Coolant Switch		225 - 235°F (107 - 113°C)	-

TIGHTENING TORQUES FOR STANDARD BOLTS AND NUTS

Use the correct amount of torque when you tighten fasteners on the machine. Applying excessive torque may damage the fastener or component and not enough torque may cause a leak or component failure.

CAUTION

The tightening torque in the *Standard Torque Chart* in *General Service Information* should be applied only to the bolts with a "7" head. (JIS strength classification: 7T)

- **Apply 60% torque to bolts that are not listed.**
- **Apply 80% torque when tightened to aluminum alloy.**



0000023enTNVIDISM

Item	Nominal Thread Diameter x Pitch	Tightening Torque	Remarks
Hexagon Bolt (7T) and Nut	M6 x 1.0 mm	87 - 104 in·lb (9.8 - 11.8 N·m; 1.0 - 1.2 kgf·m)	Use 80% of the value at left when the tightening part is aluminum. Use 60% of the value at left for 4T bolts and lock nuts.
	M8 x 1.25 mm	200 - 251 in·lb (22.6 - 28.4 N·m; 2.3 - 2.9 kgf·m)	
	M10 x 1.5 mm	33 - 40 ft·lb (44.1 - 53.9 N·m; 4.5 - 5.5 kgf·m)	
	M12 x 1.75 mm	58 - 72 ft·lb (78.4 - 98.0 N·m; 8.0 - 10 kgf·m)	
	M14 x 1.5 mm	94 - 108 ft·lb (127.5 - 147.1 N·m; 13 - 15 kgf·m)	
	M16 x 1.5 mm	159 - 174 ft·lb (215.7 - 235.4 N·m; 22 - 24 kgf·m)	
PT Plug	1/8 mm	87 in·lb (9.8 N·m; 1.0 kgf·m)	-
	1/4 mm	173 in·lb (19.6 N·m; 2.0 kgf·m)	
	3/8 mm	22 ft·lb (29.4 N·m; 3.0 kgf·m)	
	1/2 mm	43 ft·lb (58.8 N·m; 6.0 kgf·m)	

Item	Nominal Thread Diameter x Pitch	Tightening Torque	Remarks
Pipe Joint Bolt	M8	112 - 148 in·lb (12.7 - 16.7 N·m; 1.3 - 1.7 kgf·m)	-
	M10	173 - 225 in·lb (19.6 - 18.734 N·m,; 2.0 - 3.5 kgf·m)	
	M12	18 - 25 ft·lb (24.5 - 34.3 N·m; 2.5 - 3.5 kgf·m)	
	M14	29 - 36 ft·lb (39.2 - 49.0 N·m; 4.0 - 5.0 kgf·m)	
	M16	36 - 43 ft·lb (49.0 - 58.8 N·m; 5.0 - 6.0 kgf·m)	

Note: Torque values shown in this manual are for clean, non-lubricated fasteners unless otherwise specified.

ABBREVIATIONS AND SYMBOLS

Abbreviations

A	ampere
AC	alternating current
ACEA	Association des Constructeurs Européens d'Automobilies
Ah	ampere-hour
approx.	approximately
API	American Petroleum Institute
ARB	Air Resources Board
ATDC	after top dead center
BTDC	before top dead center
°C	degree Celsius
CARB	California Air Resources Board
CCA	cold cranking amp
cm	centimeter
cm^3	cubic centimeter
cm^3/min	cubic centimeter per minute
cu in	cubic inch
DC	direct current
DI	direct injection
DVA	direct volt adapter
EPA	Environmental Protection Agency
ESG	electronic speed governor
°F	degree Fahrenheit
fl oz	fluid ounce (U.S.)
fl oz/min	fluid ounce (U.S.) per minute
ft	foot
ft·lb	foot pound
ft·lbf/min	foot pound force per minute
g	gram
gal/hr	gallon (U.S.) per hour
gal	gallon (U.S.)
GL	gear lubricant
hp	horsepower (U.S.)
hrs	hours
I.D.	inside diameter
IDI	indirect injection
in	inch
in·lb	inch pound
JASO	Japanese Automobile Standards Organization
kg	kilogram
kgf/cm^2	kilogram force per square centimeter
kgf·m	kilogram force meter
km	kilometers
kPa	kilopascal
kW	kilowatt
L	liter
L/hr	liter per hour
lb	pound
lbf	pond force
mL	milliliter
mm	millimeter
MPa	megapascal
mV	millivolt
N	newton
N·m	newton meter
No.	number
O.D.	outside diameter
oz	ounce
PS	horsepower (metric)
psi	pound per square inch
qt	quart (U.S.)
RPM	revolutions per minute
SAE	Society of Automotive Engineers
sec.	second
t	short ton 2000lb
TBN	Total Base Number
TDC	top dead center
V	volt
VAC	volt alternating current
VDC	volt direct current
W	watt

Symbols

°	angular degree
+	plus
-	minus
±	plus or minus
Ω	ohm
µ	micro
%	percent
~	approximate

UNIT CONVERSIONS

Unit Prefixes

Prefix	Symbol	Power
mega	M	x 1,000,000
kilo	k	x 1,000
centi	c	x 0.01
milli	m	x 0.001
micro	μ	x 0.000001

Units of Length

mile	x	1.6090	= km
ft	x	0.3050	= m
in	x	2.5400	= cm
in	x	25.4000	= mm
km	x	0.6210	= mile
m	x	3.2810	= ft
cm	x	0.3940	= in
mm	x	0.0394	= in

Units of Volume

gal (U.S.)	x	3.78540	= L
qt (U.S.)	x	0.94635	= L
cu in	x	0.01639	= L
cu in	x	16.38700	= mL
fl oz (U.S.)	x	0.02957	= L
fl oz (U.S.)	x	29.57000	= mL
cm^3	x	1.00000	= mL
cm^3	x	0.03382	= fl oz (U.S.)

Units of Mass

lb	x	0.45360	= kg
oz	x	28.35000	= g
kg	x	2.20500	= lb
g	x	0.03527	= oz

Units of Force

lbf	x	4.4480	= N
lbf	x	0.4536	= kgf
N	x	0.2248	= lbf
N	x	0.1020	= kgf
kgf	x	2.2050	= lbf
kgf	x	9.8070	= N

Units of Torque

ft·lb	x	1.3558	= N·m
ft·lb	x	0.1383	= kgf·m
in·lb	x	0.1130	= N·m
in·lb	x	0.0115	= kgf·m
kgf·m	x	7.2330	= ft·lb
kgf·m	x	86.8000	= in·lb
kgf·m	x	9.8070	= N·m
N·m	x	0.7376	= ft·lb
N·m	x	8.8510	= in·lb
N·m	x	0.1020	= kgf·m

Units of Pressure

psi	x	0.0689	= bar
psi	x	6.8950	= kPa
psi	x	0.0703	= kg/cm^2
bar	x	14.5030	= psi
bar	x	100.0000	= kPa
bar	x	29.5300	= in Hg (60°F)
kPa	x	0.1450	= psi
kPa	x	0.0100	= bar
kPa	x	0.0102	= kg/cm^2
kg/cm^2	x	98.0700	= psi
kg/cm^2	x	0.9807	= bar
kg/cm^2	x	14.2200	= kPa
in Hg (60°)	x	0.0333	= bar
in Hg (60°)	x	3.3770	= kPa
in Hg (60°)	x	0.0344	= kg/cm^2

Units of Power

hp (metric or PS)	x	0.9863201	= hp SAE
hp (metric or PS)	x	0.7354988	= kW
hp SAE	x	1.0138697	= hp (metric or PS)
hp SAE	x	0.7456999	= kW
kW	x	1.3596216	= hp (metric or PS)
kW	x	1.3410221	= hp SAE

Units of Temperature

°F = (1.8 x °C) + 32
°C = 0.556 x (°F - 32)

This Page Intentionally Left Blank

Section 5

PERIODIC MAINTENANCE

Page

Introduction 5-3

Precautions 5-15
- The Importance of Periodic Maintenance 5-15
- Performing Periodic Maintenance 5-15
- Yanmar Replacement Parts 5-16
- Required EPA / ARB Maintenance - USA Only 5-16
- EPA / ARB Installation Requirements - USA Only 5-16

Periodic Maintenance Schedule 5-16

Periodic Maintenance Procedures 5-18
- After Initial 50 Hours of Operation 5-18
- Every 50 Hours of Operation 5-21
- Every 250 Hours of Operation 5-25
- Every 500 Hours of Operation 5-30
- Every 1000 Hours of Operation 5-33
- Every 1500 Hours of Operation 5-36
- Every 2000 Hours of Operation 5-37

This Page Intentionally Left Blank

INTRODUCTION

This section of the *Service Manual* describes the procedures for proper care and maintenance of the engine.

DANGER



EXPLOSION HAZARD!

- **NEVER check the remaining battery charge by shorting out the terminals. This will result in a spark and may cause an explosion or fire. Use a hydrometer to check the remaining battery charge.**
- **If the electrolyte is frozen, slowly warm the battery before you recharge it.**
- **Failure to comply will result in death or serious injury.**

0000007en

DANGER



FIRE AND EXPLOSION HAZARD!

- **Only use the key switch to start the engine.**
- **NEVER jump-start the engine. Sparks caused by shorting the battery to the starter terminals may cause a fire or explosion.**
- **Failure to comply will result in death or serious injury.**

0000004en

DANGER



SCALD HAZARD!

- **NEVER remove the radiator cap if the engine is hot. Steam and hot engine coolant will spurt out and seriously burn you. Allow the engine to cool down before you attempt to remove the radiator cap.**
- **Tighten the radiator cap securely after you check the radiator. Steam can spurt out during engine operation if the cap is loose.**
- **ALWAYS check the level of the engine coolant by observing the reserve tank.**
- **Failure to comply will result in death or serious injury.**

0000002en

DANGER



FIRE AND EXPLOSION HAZARD!

- Diesel fuel is flammable and explosive under certain conditions.
- Only fill the fuel tank with diesel fuel. Filling the fuel tank with gasoline may result in a fire and will damage the engine.
- NEVER refuel with the engine running.
- Wipe up all spills immediately.
- Keep sparks, open flames or any other form of ignition (match, cigarette, static electric source) well away when refueling.
- NEVER overfill the fuel tank.
- Fill the fuel tank. Store any containers containing fuel in a well-ventilated area, away from any combustibles or sources of ignition.
- Failure to comply will result in death or serious injury.

0000005en

DANGER



FIRE AND EXPLOSION HAZARD!

- Diesel fuel is flammable and explosive under certain conditions.
- Before you operate the engine, check for fuel leaks. Replace rubberized fuel hoses every two years or every 2000 hours of engine operation, whichever comes first, even if the engine has been out of service. Rubberized fuel lines tend to dry out and become brittle after two years or 2000 hours of engine operation, whichever comes first.
- Failure to comply will result in death or serious injury.

0000015en

DANGER



FIRE AND EXPLOSION HAZARD!

- Diesel fuel is flammable and explosive under certain conditions.
- Be sure to place the diesel fuel container on the ground when transferring the diesel fuel from the pump to the container. Hold the hose nozzle firmly against the side of the container while filling it. This prevents static electricity buildup which could cause sparks and ignite fuel vapors.
- NEVER place diesel fuel or other flammable material such as oil, hay or dried grass close to the engine during engine operation or shortly after shutdown.
- Failure to comply will result in death or serious injury.

0000014en

DANGER



FIRE AND EXPLOSION HAZARD!

- Diesel fuel is flammable and explosive under certain conditions.
- NEVER use diesel fuel as a cleaning agent.
- Failure to comply will result in death or serious injury.

0000012en

DANGER



FIRE AND EXPLOSION HAZARD!

- Diesel fuel is flammable and explosive under certain conditions.
- NEVER remove the fuel cap with the engine running.
- Failure to comply will result in death or serious injury.

0000011en

DANGER



CRUSH HAZARD!

- When you need to transport an engine for repair, have a helper assist you to attach it to a hoist and load it on a truck.
- NEVER stand under a hoisted engine. If the hoist mechanism fails, the engine will fall on you, causing death or serious injury.
- Failure to comply will result in death or serious injury.

0000008en

DANGER



FIRE AND EXPLOSION HAZARD!

- **Diesel fuel is flammable and explosive under certain conditions.**
- **When you remove any fuel system component to perform maintenance (such as changing the fuel filter) place an approved container under the opening to catch the fuel.**
- **NEVER use a shop rag to catch the fuel. Vapors from the rag are flammable and explosive.**
- **Wipe up any spills immediately.**
- **Wear eye protection. The fuel system is under pressure and fuel could spray out when you remove any fuel system component.**
- **Failure to comply will result in death or serious injury.**

0000009en

DANGER



FIRE AND EXPLOSION HAZARD!

- **Diesel fuel is flammable and explosive under certain conditions.**
- **Place an approved container under the air bleed port when you prime the fuel system. Never use a shop rag to catch the fuel. Wipe up any spills immediately. ALWAYS close the air bleed port after you complete priming the system.**
- **Wear eye protection. The fuel system is under pressure and fuel could spray out when you open the air bleed port.**
- **If the unit has an electric fuel pump, turn the key switch to the ON position for 10 to 15 seconds, or until the fuel coming out of the air bleed port is free of bubbles, to allow the electric fuel pump to prime the system.**
- **If the unit has a mechanical fuel pump, operate the fuel priming pump several times until the fuel coming out of the air bleed port is free of bubbles.**
- **Failure to comply will result in death or serious injury.**

0000006en

⚠ WARNING



EXHAUST HAZARD!

- NEVER operate the engine in an enclosed area such as a garage, tunnel, underground room, manhole or ship's hold without proper ventilation.
- NEVER block windows, vents, or other means of ventilation if the engine is operating in an enclosed area. All internal combustion engines create carbon monoxide gas during operation. Accumulation of this gas within an enclosure could cause illness or even death.
- Make sure that all connections are tightened to specifications after repair is made to the exhaust system.
- Failure to comply could result in death or serious injury.

0000003en

⚠ WARNING



SEVER HAZARD!

- Keep hands and other body parts away from moving / rotating parts such as the cooling fan, flywheel or PTO shaft.
- Wear tight-fitting clothing and keep your hair short or tie it back while the engine is running.
- Remove all jewelry before you operate or service the machine.
- NEVER start the engine in gear. Sudden movement of the engine and / or machine could cause death or serious personal injury.
- NEVER operate the engine without the guards in place.
- Before you start the engine make sure that all bystanders are clear of the area.
- Keep children and pets away while the engine is operating.
- Check before starting the engine that any tools or shop rags used during maintenance have been removed from the area.
- Failure to comply could result in death or serious injury.

0000002en

⚠ WARNING



BURN HAZARD!

- Keep your hands and other body parts away from hot engine surfaces such as the muffler, exhaust pipe, turbocharger (if equipped) and engine block during operation and shortly after you shut the engine down. These surfaces are extremely hot while the engine is operating and could seriously burn you.
- Failure to comply could result in death or serious injury.

0000015en

⚠ WARNING



ALCOHOL AND DRUG HAZARD!

- NEVER operate the engine while you are under the influence of alcohol or drugs.
- NEVER operate the engine when you are feeling ill.
- Failure to comply could result in death or serious injury.

0000004en

⚠ WARNING

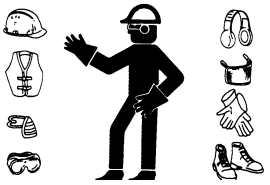

EXPOSURE HAZARD!

- Wear personal protective equipment such as gloves, work shoes, eye and hearing protection as required by the task at hand.
- NEVER wear jewelry, unbuttoned cuffs, ties or loose-fitting clothing when you are working near moving / rotating parts such as the cooling fan, flywheel or PTO shaft.
- ALWAYS tie back long hair when you are working near moving / rotating parts such as a cooling fan, flywheel, or PTO shaft.
- NEVER operate the engine while wearing a headset to listen to music or radio because it will be difficult to hear the alert signals.
- Failure to comply could result in death or serious injury.

0000005en

⚠ WARNING



BURN HAZARD!

- Batteries contain sulfuric acid. NEVER allow battery fluid to come in contact with clothing, skin or eyes. Severe burns could result. ALWAYS wear safety goggles and protective clothing when servicing the battery. If battery fluid contacts the eyes and / or skin, immediately flush the affected area with a large amount of clean water and obtain prompt medical treatment.
- Failure to comply could result in death or serious injury.

0000007en

⚠ WARNING



HIGH-PRESSURE HAZARD!

- Avoid skin contact with the high-pressure diesel fuel spray caused by a fuel system leak such as a broken fuel injection line. High-pressure fuel can penetrate your skin and result in serious injury. If you are exposed to high-pressure fuel spray, obtain prompt medical treatment.
- NEVER check for a fuel leak with your hands. ALWAYS use a piece of wood or cardboard. Have your authorized Yanmar industrial engine dealer or distributor repair the damage.
- Failure to comply could result in death or serious injury.

0000008en

⚠ WARNING



SHOCK HAZARD!

- Turn off the battery switch (if equipped) or disconnect the negative battery cable before servicing the electrical system.
- Check the electrical harnesses for cracks, abrasions, and damaged or corroded connectors. ALWAYS keep the connectors and terminals clean.
- Failure to comply could result in death or serious injury.

0000009en

⚠ WARNING



ENTANGLEMENT HAZARD!

- Stop the engine before you begin to service it.
- NEVER leave the key in the key switch when you are servicing the engine. Someone may accidentally start the engine and not realize you are servicing it. This could result in a serious injury.
- If you must service the engine while it is operating, remove all jewelry, tie back long hair, and keep your hands, other body parts and clothing away from moving / rotating parts.
- Failure to comply could result in death or serious injury.

0000010en

⚠ WARNING



BURN HAZARD!

- If you must drain the engine oil while it is still hot, stay clear of the hot engine oil to avoid being burned.
- ALWAYS wear eye protection.
- Failure to comply could result in death or serious injury.

0000011en

⚠ CAUTION



FLYING OBJECT HAZARD!

- ALWAYS wear eye protection when servicing the engine and when using compressed air or high-pressure water. Dust, flying debris, compressed air, pressurized water or steam may injure your eyes.
- Failure to comply may result in minor or moderate injury.

0000003en

⚠ CAUTION

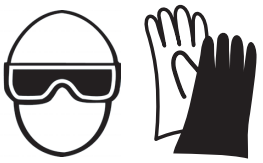

COOLANT HAZARD!

- Wear eye protection and rubber gloves when you handle long life or extended life engine coolant. If contact with the eyes or skin should occur, flush eyes and wash immediately with clean water.
- Failure to comply may result in minor or moderate injury.

0000005en

CAUTION

- Only use the engine oil specified. Other engine oils may affect warranty coverage, cause internal engine components to seize and / or shorten engine life.
- Prevent dirt and debris from contaminating the engine oil. Carefully clean the oil cap / dipstick and the surrounding area before you remove the cap.
- NEVER mix different types of engine oil. This may adversely affect the lubricating properties of the engine oil.
- NEVER overfill. Overfilling may result in white exhaust smoke, engine overspeed or internal damage.

0000005en

CAUTION

- Only use diesel fuels recommended by Yanmar for the best engine performance, to prevent engine damage and to comply with EPA / ARB warranty requirements.
- Only use clean diesel fuel.
- NEVER remove the primary strainer (if equipped) from the fuel tank filler port. If removed, dirt and debris could get into the fuel system causing it to clog.

0000004en

CAUTION

- Only use the engine oil specified. Other engine oils may affect warranty coverage, cause internal engine components to seize and / or shorten engine life.
- Prevent dirt and debris from contaminating the engine oil. Carefully clean the oil cap / dipstick and the surrounding area before you remove the cap.
- NEVER mix different types of engine oil. This may adversely affect the lubricating properties of the engine oil.
- NEVER overfill. Overfilling may result in white exhaust smoke, engine overspeed or internal damage.

0000005en

CAUTION

- Only use the engine coolant specified. Other engine coolants may affect warranty coverage, cause an internal buildup of rust and scale and / or shorten engine life.
- Prevent dirt and debris from contaminating the engine coolant. Carefully clean the radiator cap and the surrounding area before you remove the cap.
- NEVER mix different types of engine coolants. This may adversely affect the properties of the engine coolant.

0000006en

CAUTION

- NEVER attempt to modify the engine's design or safety features such as defeating the engine speed limit control or the diesel fuel injection quantity control.
- Modifications may impair the engine's safety and performance characteristics and shorten the engine's life. Any alterations to this engine may void its warranty. Be sure to use Yanmar genuine replacement parts.

0000079en

CAUTION

Observe the following environmental operating conditions to maintain engine performance and avoid premature engine wear:

- Avoid operating in extremely dusty conditions.
- Avoid operating in the presence of chemical gases or fumes.
- Avoid operating in a corrosive atmosphere such as salt water spray.
- NEVER install the engine in a floodplain unless proper precautions are taken to avoid being subject to a flood.
- NEVER expose the engine to the rain.

0000003en

CAUTION

Observe the following environmental operating conditions to maintain engine performance and avoid premature engine wear:

- The standard range of ambient temperatures for the normal operation of Yanmar engines is from +5°F (-15°C) to +113°F (+45°C).
- If the ambient temperature exceeds +113°F (+45°C) the engine may overheat and cause the engine oil to break down.
- If the ambient temperature is below +5°F (-15°C) the engine will be hard to start and the engine oil may not flow easily.
- Contact your authorized Yanmar industrial engine dealer or distributor if the engine will be operated outside of this standard temperature range.

0000065en

CAUTION

NEVER hold the key in the START position for longer than 15 seconds or the starter motor will overheat.

0000007en

CAUTION

For maximum engine life, Yanmar recommends that when shutting the engine down, you allow the engine to idle, without load, for five minutes. This will allow the engine components that operate at high temperatures, such as the turbocharger (if equipped) and exhaust system, to cool slightly before the engine itself is shut down.

0000008en

CAUTION

NEVER use an engine starting aid such as ether. Engine damage will result.

0000009en

CAUTION

Make sure the engine is installed on a level surface. If a continuously running engine is installed at an angle greater than (IDI = 25°, DI = 30°) in any direction or if an engine runs for short periods of time (less than three minutes) at an angle greater than (IDI = 30°, DI = 35°) in any direction, engine oil may enter the combustion chamber causing excessive engine speed and white exhaust smoke. This may cause serious engine damage.

0000010enTNV

CAUTION

New Engine Break-in:

- **On the initial engine start-up, allow the engine to idle for approximately 15 minutes while you check for proper engine oil pressure, diesel fuel leaks, engine oil leaks, coolant leaks, and for proper operation of the indicators and / or gauges.**
- **During the first hour of operation, vary the engine speed and the load on the engine. Short periods of maximum engine speed and load are desirable. Avoid prolonged operation at minimum or maximum engine speeds and loads for the next four to five hours.**
- **During the break-in period, carefully observe the engine oil pressure and engine temperature.**
- **During the break-in period, check the engine oil and coolant levels frequently.**

0000011en

CAUTION

NEVER engage the starter motor while the engine is running. This may damage the starter motor pinion and / or ring gear.

0000012en

CAUTION

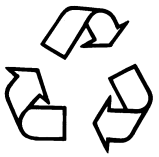

- **ALWAYS be environmentally responsible.**
- **Follow the guidelines of the EPA or other governmental agencies for the proper disposal of hazardous materials such as engine oil, diesel fuel and engine coolant. Consult the local authorities or reclamation facility.**
- **NEVER dispose of hazardous materials irresponsibly by dumping them into a sewer, on the ground, or into ground water or waterways.**
- **Failure to follow these procedures may seriously harm the environment.**

0000013en

CAUTION

Protect the air cleaner, turbocharger (if equipped) and electric components from damage when you use steam or high-pressure water to clean the engine.

0000014en

CAUTION

- **NEVER overfill the engine with engine oil.**
- **ALWAYS keep the oil level between the upper and lower lines on the oil cap / dipstick.**

0000015en

CAUTION

NEVER use high-pressure water or compressed air at greater than 28 psi (193 kPa; 19 686 mmAq) or a wire brush to clean the radiator fins. Radiator fins damage easily.

0000016en

CAUTION

NEVER attempt to adjust the low or high idle speed limit screw. This may impair the safety and performance of the machine and shorten its life. If the idle speed limit screws require adjustment, see your authorized Yanmar industrial engine dealer or distributor.

0000017en

CAUTION

Establish a periodic maintenance plan according to the engine application and make sure you perform the required periodic maintenance at intervals indicated. Failure to follow these guidelines will impair the engine's safety and performance characteristics, shorten the engine's life and may affect the warranty coverage on your engine. *See Yanmar Warranties section.*

Consult your authorized Yanmar dealer or distributor for assistance when checking items marked with a ●.

0000024enTNVIDISM

CAUTION

If the fuel filter / water separator is positioned higher than the fuel level in the fuel tank, water may not drip out when the fuel filter / water separator drain cock is opened. If this happens, turn the air vent screw on the top of the fuel filter / water separator 2-3 turns counterclockwise.

Be sure to tighten the air vent screw after the water has drained out.

0000025en

CAUTION

- **When the engine is operated in dusty conditions, clean the air cleaner element more frequently.**
- **NEVER operate the engine with the air cleaner element(s) removed. This may allow foreign material to enter the engine and damage it.**

0000026en

CAUTION

The maximum air intake restriction, in terms of differential pressure measurement, must not exceed 0.90 psi (6.23 kPa; 635 mmAq). Clean or replace the air cleaner element if the air intake restriction exceeds the above mentioned value.

0000046en

CAUTION

The tightening torque in the *Standard Torque Chart* in *General Service Information* should be applied only to the bolts with a "7" head. (JIS strength classification: 7T)

- **Apply 60% torque to bolts that are not listed.**
- **Apply 80% torque when tightened to aluminum alloy.**



0000023enTNVIDISM

CAUTION

It is important to perform daily checks.

Periodic maintenance prevents unexpected downtime, reduces the number of accidents due to poor machine performance and helps extend the life of the engine.

0000060en

PRECAUTIONS

The Importance of Periodic Maintenance

Engine deterioration and wear occurs in proportion to length of time the engine has been in service and the conditions the engine is subject to during operation. Periodic maintenance prevents unexpected downtime, reduces the number of accidents due to poor machine performance and helps extend the life of the engine.

Performing Periodic Maintenance

⚠ WARNING



EXHAUST HAZARD!

- **NEVER operate the engine in an enclosed area such as a garage, tunnel, underground room, manhole or ship's hold without proper ventilation.**
- **NEVER block windows, vents, or other means of ventilation if the engine is operating in an enclosed area. All internal combustion engines create carbon monoxide gas during operation. Accumulation of this gas within an enclosure could cause illness or even death.**
- **Make sure that all connections are tightened to specifications after repair is made to the exhaust system.**
- **Failure to comply could result in death or serious injury.**

0000003en

Perform periodic maintenance procedures in an open, level area free from traffic. If possible, perform the procedures indoors to prevent environmental conditions, such as rain, wind, or snow, from damaging the machine.

Yanmar Replacement Parts

Yanmar recommends that you use genuine Yanmar parts when replacement parts are needed. Genuine replacement parts help ensure long engine life.

Required EPA / ARB Maintenance - USA Only

To maintain optimum engine performance and compliance with the Environmental Protection Agency (EPA) Regulations Non-road Engines and the California Air Resources Board (ARB, California), it is essential that you follow the *Periodic Maintenance Schedule on page 5-16* and Periodic Maintenance Procedures on page 5-18.

EPA / ARB Installation Requirements - USA Only

The following are the installation requirements for the EPA / ARB. Unless these requirements are met, the exhaust gas emissions will not be within the limits specified by the EPA and ARB.

Maximum Exhaust Gas Restriction shall be:

- 3TNV72: 1.71 psi (11.8 kPa; 1200 mm Aq) or less

Maximum air intake restriction shall be 0.90 psi (6.23kPa; 635mm Aq) or less. Clean or replace the air cleaner element if the air intake restriction exceeds the above mentioned value.

PERIODIC MAINTENANCE SCHEDULE

Daily and periodic maintenance is important to keep the engine in good operating condition. The following is a summary of maintenance items by periodic maintenance intervals. Periodic maintenance intervals vary depending on engine application, loads, diesel fuel and engine oil used and are hard to establish definitively. The following should be treated only as a general guideline.

CAUTION

Establish a periodic maintenance plan according to the engine application and make sure you perform the required periodic maintenance at intervals indicated. Failure to follow these guidelines will impair the engine's safety and performance characteristics, shorten the engine's life and may affect the warranty coverage on your engine. *See Yanmar Warranties section.*

Consult your authorized Yanmar dealer or distributor for assistance when checking items marked with a ●.

0000024enTNVIDISM

○:Check ◇:Replace ●: Contact your authorized Yanmar industrial engine dealer or distributor

System	Check Item	Daily	Periodic Maintenance Interval					
			Every 50 hours	Every 250 hours	Every 500 hours	Every 1000 hours	Every 1500 hours	Every 2000 hours
Cooling System	Check and Refill Engine Coolant	○						
	Check and Clean Radiator Fins			○				
	Check and Adjust Cooling Fan V-Belt		○1st time	○ 2nd and after				
	Drain, Flush and Refill Cooling System with New Coolant					◇ or every 1 yr. which-ever comes first		
Cylinder Head	Adjust Intake / Exhaust Valve Clearance					●		
	Lap Intake / Exhaust Valve Seats							●
Electrical Equipment	Check Indicators	○						
	Check Battery		○					
Engine Oil	Check Engine Oil Level	○						
	Drain and Fill Engine Oil		◇1st time	◇2nd and after				
	Replace Engine Oil Filter							
Engine Speed Control	Check and Adjust Governor Lever and Engine Speed Control	○		○				
Emission Control Warranty	Inspect, Clean and Test Fuel Injectors (if required)						●	
	Inspect Crankcase Breather System						●	
Fuel	Check and Refill Fuel Tank Level	○						
	Drain Fuel Tank			○				
	Drain Fuel Filter / Water Separator		○					
	Check Fuel Filter / Water Separator	○						
	Clean Fuel Filter / Water Separator				○			
	Replace Fuel Filter				◇			
Hoses	Replace Fuel System and Cooling System Hoses							● or every 2 yrs.
Intake and Exhaust	Clean or Replace Air Cleaner Element			○	◇			
Complete Engine	Overall Visual Check Daily	○						

Note: These procedures are considered normal maintenance and are performed at the owner's expense.

PERIODIC MAINTENANCE PROCEDURES

After Initial 50 Hours of Operation

Perform the following maintenance after the initial 50 hours of operation.

- **Replace Engine Oil and Engine Oil Filter**
- **Check and Adjust Cooling Fan V-Belt**

Replace Engine Oil and Engine Oil Filter

⚠ WARNING



BURN HAZARD!

- **If you must drain the engine oil while it is still hot, stay clear of the hot engine oil to avoid being burned.**
- **ALWAYS wear eye protection.**
- **Failure to comply could result in death or serious injury.**

0000011en

CAUTION

- **Only use the engine oil specified. Other engine oils may affect warranty coverage, cause internal engine components to seize and / or shorten engine life.**
- **Prevent dirt and debris from contaminating the engine oil. Carefully clean the oil cap / dipstick and the surrounding area before you remove the cap.**
- **NEVER mix different types of engine oil. This may adversely affect the lubricating properties of the engine oil.**
- **NEVER overfill. Overfilling may result in white exhaust smoke, engine overspeed or internal damage.**

0000005en

CAUTION

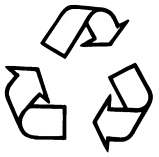

- **ALWAYS be environmentally responsible.**
- **Follow the guidelines of the EPA or other governmental agencies for the proper disposal of hazardous materials such as engine oil, diesel fuel and engine coolant. Consult the local authorities or reclamation facility.**
- **NEVER dispose of hazardous materials irresponsibly by dumping them into a sewer, on the ground, or into ground water or waterways.**
- **Failure to follow these procedures may seriously harm the environment.**

0000013en

The engine oil on a new engine becomes contaminated from the initial break-in of internal parts. It is very important that the initial oil and filter change is performed as scheduled.

Note: The oil drain plug may be in another location if an optional oil pan is used.

Drain the engine oil as follows:

1. Make sure the engine is level.
2. Start the engine and bring it up to operating temperature.
3. Stop the engine.
4. Remove the oil filler cap **(Figure 5-1, (1))** to vent the engine crankcase and allow the engine oil to drain more easily.
5. Position a container under the engine to collect waste oil.

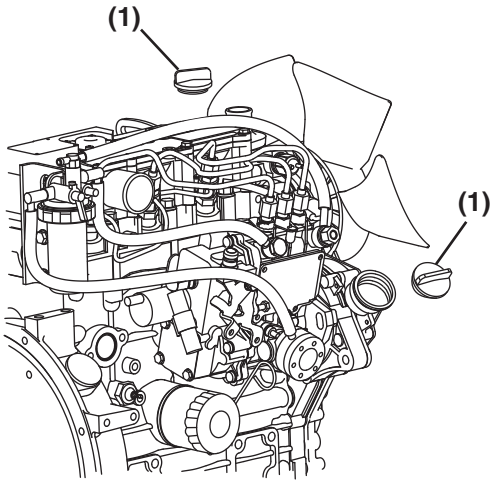

Figure 5-1

6. Remove the oil drain plug **(Figure 5-2, (1))**. Allow oil to drain.
7. After all oil has been drained from the engine, reinstall the oil drain plug **(Figure 5-2, (1))** and tighten to 39.8 - 47.0 ft·lb (53.9 - 63.7 N·m, 5.5 - 6.5 kgf·m).
8. Dispose of used oil properly.

Remove the engine oil filter as follows:

1. Turn the engine oil filter **(Figure 5-2, (2))** counterclockwise **(Figure 5-2, (4))** using a filter wrench.

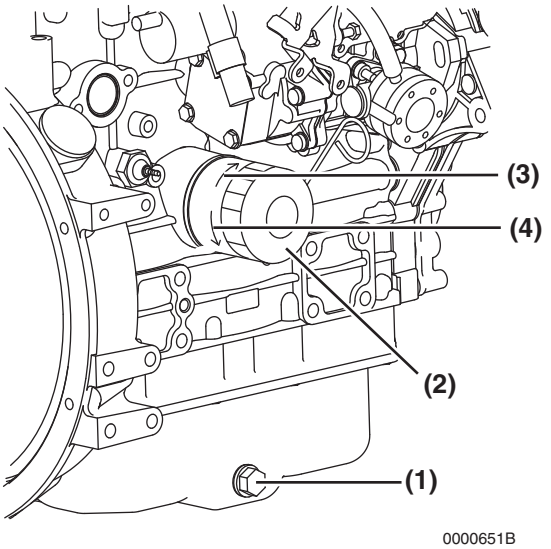

Figure 5-2

2. Clean the engine oil filter mounting face.
3. Lightly coat the gasket on the new oil filter with clean engine oil. Install the new engine oil filter manually by turning it clockwise **(Figure 5-2, (3))** until it contacts the mounting surface. Tighten to 14 - 17 ft·lb (19.6 - 23.5 N·m, 2.0 - 2.4 kgf·m or one additional turn using the filter wrench.

Applicable Engine Oil Filter Part No.	
3TNV72	119305-35150

4. Add new engine oil to the engine as specified in *Adding Engine Oil on page 4-14*.

Check and Adjust Cooling Fan V-Belt

The V-belt will slip if it does not have the proper tension. This will prevent the alternator from generating sufficient power. Also, the engine will overheat due to the engine coolant pump pulley slipping.

Check and adjust the V-belt tension (deflection) as follows:

1. Press the V-belt down with your thumb with a force of approximately 22 ft·lb (98 N·m, 10 kgf·m) to check the deflection.

   There are three positions to check for V-belt tension **(Figure 5-4, (A), (B) and (C))**. You can check the tension at whichever position is the most accessible. The proper deflection of a used V-belt at each position is:

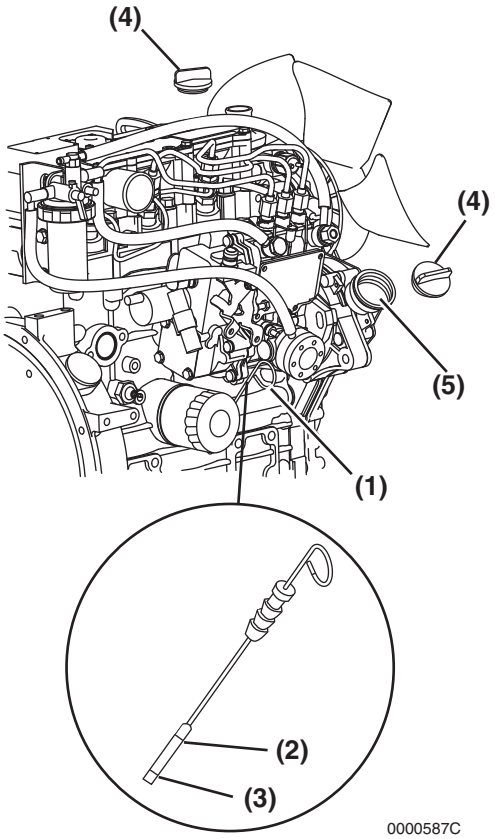

Figure 5-3

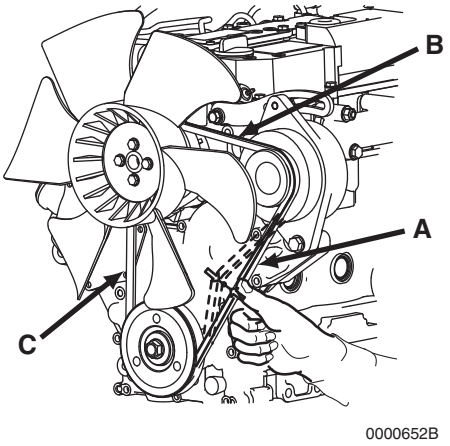

Figure 5-4

Used V-Belt Tension		
A	**B**	**C**
3/8 - 1/2 in. (10 - 14 mm)	1/4 - 3/8 in. (7 - 10 mm)	5/16 - 1/2 in. (9 - 13 mm)

2. If necessary, adjust the V-belt tension. Loosen the adjusting bolt **(Figure 5-5, (1))** and move the alternator **(Figure 5-5, (2))** with a pry bar **(Figure 5-5, (3))** to tighten the V-belt to the desired tension. Then tighten the adjusting bolt.

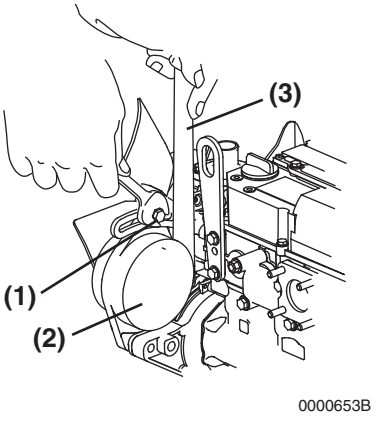

Figure 5-5

3. Tighten the V-belt to the proper tension. There must be clearance **(Figure 5-6, (1))** between the V-belt and the bottom of the pulley groove. If there is no clearance **(Figure 5-6, (2))** between the V-belt and the bottom of the pulley groove, replace the V-belt.

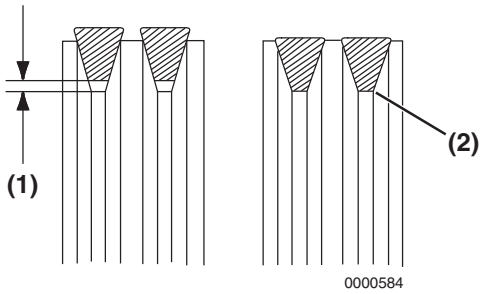

Figure 5-6

4. Check the V-belt for cracks, oil or wear. If any of these conditions exist, replace the V-belt.
   - "New V-belt" refers to a V-belt which has been used less than 5 minutes on a running engine.
   - "Used V-belt" refers to a V-belt which has been used on a running engine for 5 minutes or more.
5. Inspect the condition of the used V-belt. There must be clearance **(Figure 5-6, (1))** between the V-belt and the bottom of the pulley groove. If there is no clearance **(Figure 5-6, (2))** between the V-belt and the bottom of the pulley groove, replace the V-belt.
6. Install the new V-belt. Refer to the table for proper tension.

New V-Belt Tension		
A	**B**	**C**
5/16 - 7/16 in. (8 - 12 mm)	3/16 - 5/16 in. (5 - 8 mm)	1/4 - 7/16 in. (7 - 11 mm)

7. After adjusting, run the engine for 5 minutes or more. Check the tension again using the specifications for a used V-belt.

Used V-Belt Tension		
A	**B**	**C**
3/8 - 1/2 in. (10 - 14 mm)	1/4 - 3/8 in. (7 - 10 mm)	5/16 - 1/2 in. (9 - 13 mm)

Every 50 Hours of Operation

After you complete the initial 50 hour maintenance procedures, perform the following procedures every 50 hours thereafter.

- **Drain Fuel Filter / Water Separator**
- **Check Battery**

Drain Fuel Filter / Water Separator

⚠ DANGER



FIRE AND EXPLOSION HAZARD!

- **Diesel fuel is flammable and explosive under certain conditions.**
- **When you remove any fuel system component to perform maintenance (such as changing the fuel filter) place an approved container under the opening to catch the fuel.**
- **NEVER use a shop rag to catch the fuel. Vapors from the rag are flammable and explosive.**
- **Wipe up any spills immediately.**
- **Wear eye protection. The fuel system is under pressure and fuel could spray out when you remove any fuel system component.**
- **Failure to comply will result in death or serious injury.**

0000009en

CAUTION

If the fuel filter / water separator is positioned higher than the fuel level in the fuel tank, water may not drip out when the fuel filter / water separator drain cock is opened. If this happens, turn the air vent screw on the top of the fuel filter / water separator 2-3 turns counterclockwise.

Be sure to tighten the air vent screw after the water has drained out.

0000025en

CAUTION

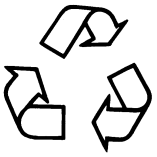

- **ALWAYS be environmentally responsible.**
- **Follow the guidelines of the EPA or other governmental agencies for the proper disposal of hazardous materials such as engine oil, diesel fuel and engine coolant. Consult the local authorities or reclamation facility.**
- **NEVER dispose of hazardous materials irresponsibly by dumping them into a sewer, on the ground, or into ground water or waterways.**
- **Failure to follow these procedures may seriously harm the environment.**

0000013en

Drain the fuel filter / water separator whenever there are contaminants, such as water, collected in the bottom of the cup. NEVER wait until the scheduled periodic maintenance if contaminants are discovered.

The cup of the separator is made from semi-transparent material. In the cup is a red-colored float ring. The float ring will rise to the surface of the water to show how much needs to be drained. Also, some optional fuel filter / water separators are equipped with a sensor to detect the amount of contaminants. This sensor sends a signal to an indicator to alert the operator.

Drain the fuel filter / water separator as follows:

1. Position an approved container under the fuel filter / water separator **(Figure 5-7, (1))** to collect the contaminants.

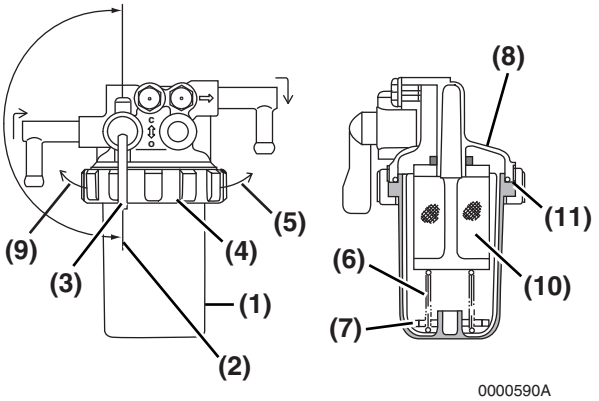

Figure 5-7

2. Close **(Figure 5-7, (2))** the fuel cock **(Figure 5-7, (3))**.
3. Turn the retaining ring **(Figure 5-7, (4))** to the left **(Figure 5-7, (9))**.
4. Carefully remove the cup **(Figure 5-7, (1))**. Remove the retaining spring **(Figure 5-7, (6))** and float **(Figure 5-7, (7))** from the cup. Pour the fuel into an approved container and dispose properly. Hold the bottom of the cup with a shop towel to prevent the fuel from dripping. Wipe up any spills immediately.
5. Clean the inside of the cup.
6. Inspect the condition of the mesh filter **(Figure 5-7, (10))**. Clean the mesh filter if necessary.
7. Inspect the condition of the O-ring **(Figure 5-7, (11))**. Replace the O-ring if necessary.

8. Put the float **(Figure 5-7, (7))** and retaining spring **(Figure 5-7, (6))** inside the cup.
9. Reinstall the cup to the mounting flange **(Figure 5-7, (8))** and turn the retaining ring **(Figure 5-7, (4))** to the right **(Figure 5-7, (5))**. Hand-tighten only.
10. Open the fuel cock **(Figure 5-7, (3))**.
11. Be sure to prime the fuel system. *See Priming the Fuel System on page 4-12.*
12. Check for fuel leaks.

CAUTION

If the fuel filter / water separator is positioned higher than the fuel level in the fuel tank, water may not drip out when the fuel filter / water separator drain cock is opened. If this happens, turn the air vent screw on the top of the fuel filter / water separator 2-3 turns counterclockwise.

Be sure to tighten the air vent screw after the water has drained out.

0000025en

Check Battery

DANGER



EXPLOSION HAZARD!

- **NEVER check the remaining battery charge by shorting out the terminals. This will result in a spark and may cause an explosion or fire. Use a hydrometer to check the remaining battery charge.**
- **If the electrolyte is frozen, slowly warm the battery before you recharge it.**
- **Failure to comply will result in death or serious injury.**

0000007en

WARNING



BURN HAZARD!

- **Batteries contain sulfuric acid. NEVER allow battery fluid to come in contact with clothing, skin or eyes. Severe burns could result. ALWAYS wear safety goggles and protective clothing when servicing the battery. If battery fluid contacts the eyes and / or skin, immediately flush the affected area with a large amount of clean water and obtain prompt medical treatment.**
- **Failure to comply could result in death or serious injury.**

0000007en

CAUTION

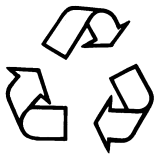

- **ALWAYS be environmentally responsible.**
- **Follow the guidelines of the EPA or other governmental agencies for the proper disposal of hazardous materials such as engine oil, diesel fuel and engine coolant. Consult the local authorities or reclamation facility.**
- **NEVER dispose of hazardous materials irresponsibly by dumping them into a sewer, on the ground, or into ground water or waterways.**
- **Failure to follow these procedures may seriously harm the environment.**

0000013en

- When the amount of fluid nears the lower limit **(Figure 5-8, (1))**, fill with distilled water **(Figure 5-8, (2))** so it is at the upper limit **(Figure 5-8, (3))**. If operation continues with insufficient battery fluid, the battery life is shortened, and the battery may overheat and explode. During the summer, check the fluid level more often than specified.

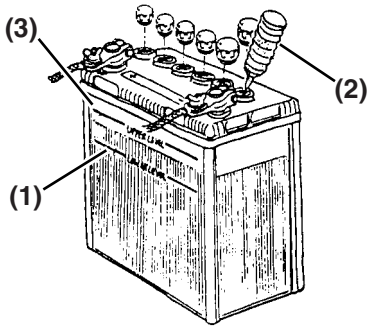

0000067A

Figure 5-8

- If the engine cranking speed is so slow that the engine does not start, recharge the battery.
- If the engine still will not start after charging, have your authorized Yanmar industrial engine dealer or distributor check the battery and the engine's starting system.
- If operating the machine where the ambient temperature could drop to 5°F (-15°C) or less, remove the battery from the machine at the end of the day. Store the battery in a warm place until the next use. This will help start the engine easily at low ambient temperatures.

Every 250 Hours of Operation

Perform the following maintenance every 250 hours of operation.

- **Drain Fuel Tank**
- **Replace Engine Oil and Engine Oil Filter**
- **Check and Clean Radiator Fins**
- **Check and Adjust Cooling Fan V-Belt**
- **Check and Adjust the Governor Lever and Engine Speed Control**
- **Clean Air Cleaner Element**

Drain Fuel Tank

⚠ DANGER



FIRE AND EXPLOSION HAZARD!

- **Diesel fuel is flammable and explosive under certain conditions.**
- **When you remove any fuel system component to perform maintenance (such as changing the fuel filter) place an approved container under the opening to catch the fuel.**
- **NEVER use a shop rag to catch the fuel. Vapors from the rag are flammable and explosive.**
- **Wipe up any spills immediately.**
- **Wear eye protection. The fuel system is under pressure and fuel could spray out when you remove any fuel system component.**
- **Failure to comply will result in death or serious injury.**

0000009en

CAUTION

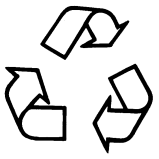

- **ALWAYS be environmentally responsible.**
- **Follow the guidelines of the EPA or other governmental agencies for the proper disposal of hazardous materials such as engine oil, diesel fuel and engine coolant. Consult the local authorities or reclamation facility.**
- **NEVER dispose of hazardous materials irresponsibly by dumping them into a sewer, on the ground, or into ground water or waterways.**
- **Failure to follow these procedures may seriously harm the environment.**

0000013en

Note that a typical fuel tank is illustrated.

1. Position an approved container under the diesel fuel tank **(Figure 5-9, (1))** to collect the contaminates.

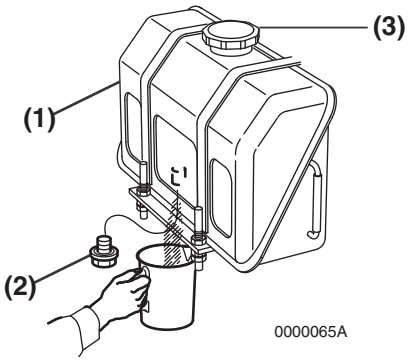

Figure 5-9

2. Remove the fuel cap **(Figure 5-9, (3))**.
3. Remove the drain plug **(Figure 5-9, (2))** of the fuel tank to drain the contaminates (water, dirt, etc.) from the bottom of the tank.

4. Drain the tank until clean diesel fuel with no water or dirt flows out. Reinstall and tighten the drain plug firmly.
5. Reinstall the fuel cap.
6. Check for fuel leaks.

Replace Engine Oil and Engine Oil Filter

CAUTION

- **Only use the engine oil specified. Other engine oils may affect warranty coverage, cause internal engine components to seize and / or shorten engine life.**
- **Prevent dirt and debris from contaminating the engine oil. Carefully clean the oil cap / dipstick and the surrounding area before you remove the cap.**
- **NEVER mix different types of engine oil. This may adversely affect the lubricating properties of the engine oil.**
- **NEVER overfill. Overfilling may result in white exhaust smoke, engine overspeed or internal damage.**

0000005en

CAUTION

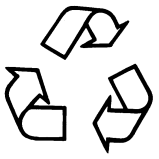

- **ALWAYS be environmentally responsible.**
- **Follow the guidelines of the EPA or other governmental agencies for the proper disposal of hazardous materials such as engine oil, diesel fuel and engine coolant. Consult the local authorities or reclamation facility.**
- **NEVER dispose of hazardous materials irresponsibly by dumping them into a sewer, on the ground, or into ground water or waterways.**
- **Failure to follow these procedures may seriously harm the environment.**

0000013en

Change the engine oil every 250 hours of operation after the initial change at 50 hours. Replace the engine oil filter at the same time. *See Replace Engine Oil and Engine Oil Filter on page 5-18.*

Check and Clean Radiator Fins

⚠ CAUTION



FLYING OBJECT HAZARD!

- **ALWAYS wear eye protection when servicing the engine and when using compressed air or high-pressure water. Dust, flying debris, compressed air, pressurized water or steam may injure your eyes.**
- **Failure to comply may result in minor or moderate injury.**

0000003en

Dirt and dust adhering to the radiator fins reduce the cooling performance, causing overheating. Make it a rule to check the radiator fins daily and clean as needed.

Note that a typical radiator is shown in **Figure 5-10** for illustrative purposes only.

- Blow off dirt and dust from fins and radiator with 28 psi (0.19 MPa; 2 kgf/cm^2) or less of compressed air **(Figure 5-10, (1))**. Be careful not to damage the fins with the compressed air.
- If there is a large amount of contamination on the fins, apply detergent, thoroughly clean and rinse with tap water.

CAUTION

NEVER use high-pressure water or compressed air at greater than 28 psi (193 kPa; 19 686 mmAq) or a wire brush to clean the radiator fins. Radiator fins damage easily.

0000016en

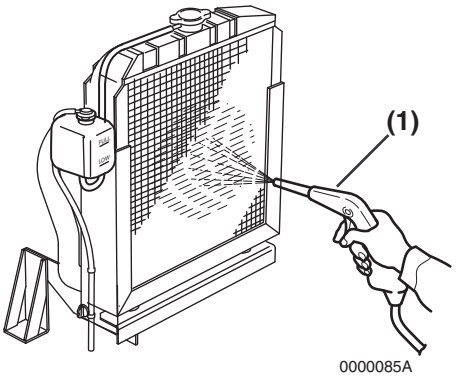

Figure 5-10

Check and Adjust Cooling Fan V-Belt

Check and adjust the cooling fan V-belt every 250 hours of operation after the initial 50 hour V-belt maintenance. *See Check and Adjust Cooling Fan V-Belt on page 5-19.*

Check and Adjust the Governor Lever and Engine Speed Control

The governor lever and engine speed control (throttle lever, accelerator pedal etc.), are connected together by a cable or linkage. If the cable becomes stretched, or the linkage wears or loosens, the governor lever may not respond to a change in the position of the engine speed control.

CAUTION

NEVER attempt to adjust the low or high idle speed limit screw. This may impair the safety and performance of the machine and shorten its life. If the idle speed limit screws require adjustment, see your authorized Yanmar industrial engine dealer or distributor.

0000017en

1. Check that the governor lever **(Figure 5-11, (1))** makes firm contact with the high idle stop **(Figure 5-11, (2))** and the low idle speed limit screw **(Figure 5-11, (3))** when the engine speed control is in the full speed or low idle speed positions.

2. If the governor lever does not make proper contact with the high idle stop or the low idle speed limit screw, adjust the throttle cable or linkage as necessary.

Note: DO NOT FORCE the throttle cable or linkage to move. This may damage the the governor lever, the throttle cable or linkage and cause irregular operation of the engine speed control.

IMPORTANT

The engine speed control (throttle lever, accelerator pedal etc.), should be equipped with stops to prevent the application of excessive pressure by the governor lever to either the high idle stop or low idle speed limit screw.

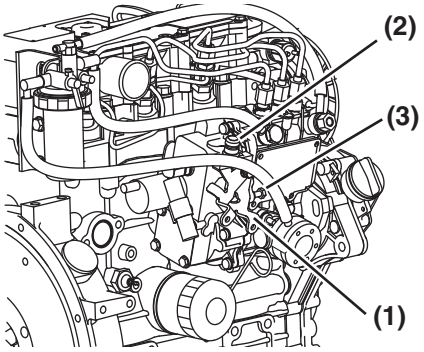

Figure 5-11

Clean Air Cleaner Element

Note that a typical air cleaner is shown in **Figure 5-12** and **Figure 5-13** for illustrative purposes only.

The engine performance is adversely affected when the air cleaner element is clogged with dust. Be sure to clean the air filter element periodically.

CAUTION

- **When the engine is operated in dusty conditions, clean the air cleaner element more frequently.**
- **NEVER operate the engine with the air cleaner element(s) removed. This may allow foreign material to enter the engine and damage it.**

0000026en

1. Unlatch and remove the air cleaner cover **(Figure 5-12, (1))**.
2. Remove the element **(Figure 5-12, (2))** (outer element if equipped with two elements).

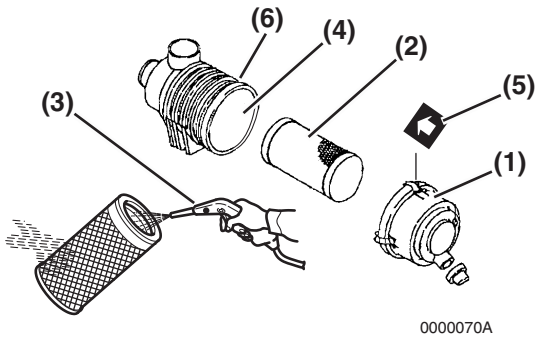

Figure 5-12

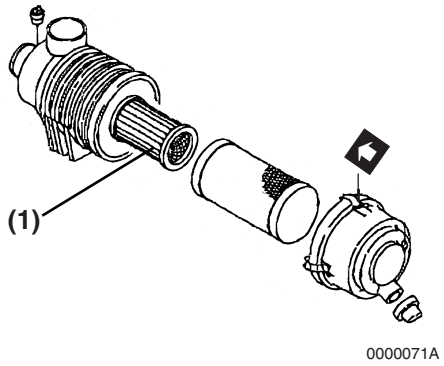

Figure 5-13

⚠ CAUTION



FLYING OBJECT HAZARD!

- **ALWAYS wear eye protection when servicing the engine and when using compressed air or high-pressure water. Dust, flying debris, compressed air, pressurized water or steam may injure your eyes.**
- **Failure to comply may result in minor or moderate injury.**

0000003en

3. Blow air **(Figure 5-12, (3))** through the element from the inside out using 42 - 71 psi (0.29 - 0.49 MPa; 3.0 - 5.0 kgf/cm2) compressed air to remove the particulates. Use the lowest possible air pressure to remove the dust without damaging the element.

   If the air cleaner is equipped with a double element, only remove and replace the inner element **(Figure 5-13, (1))** if the engine lacks power or the dust indicator actuates (if equipped).

   The inner element should not be removed when cleaning or replacing the outer element. The inner element is used to prevent dust from entering the engine while servicing the outer element.

4. Replace the element with a new one if the element is damaged, excessively dirty or oily.
5. Clean inside of the air cleaner cover.
6. Install the element into the air cleaner case **(Figure 5-12, (4))**.
7. Install the air cleaner cover making sure you match the arrow **(Figure 5-12, (5))** on the cover with the arrow on the case **(Figure 5-12, (6))**.
8. Latch the air cleaner cover to the case.

Every 500 Hours of Operation

Perform the following maintenance every 500 hours of operation.

- **Replace Air Cleaner Element**
- **Replace Fuel Filter**
- **Clean Fuel Filter / Water Separator**

Replace Air Cleaner Element

CAUTION

The maximum air intake restriction, in terms of differential pressure measurement, must not exceed 0.90 psi (6.23 kPa; 635 mmAq). Clean or replace the air cleaner element if the air intake restriction exceeds the above mentioned value.

0000046en

Replace the air cleaner element **(Figure 5-12, (2))** every 500 hours even if it is not damaged or dirty.

When replacing the element, clean the inside of the air cleaner case **(Figure 5-12, (4))**.

If the air cleaner is equipped with a double element, only remove and replace the inner element **(Figure 5-13, (1))** if the engine lacks power or the dust indicator actuates (if equipped). This is in addition to replacing the outer element.

Replace Fuel Filter

DANGER



FIRE AND EXPLOSION HAZARD!

- **Diesel fuel is flammable and explosive under certain conditions.**
- **When you remove any fuel system component to perform maintenance (such as changing the fuel filter) place an approved container under the opening to catch the fuel.**
- **NEVER use a shop rag to catch the fuel. Vapors from the rag are flammable and explosive.**
- **Wipe up any spills immediately.**
- **Wear eye protection. The fuel system is under pressure and fuel could spray out when you remove any fuel system component.**
- **Failure to comply will result in death or serious injury.**

0000009en

CAUTION

For maximum engine life, Yanmar recommends that when shutting the engine down, you allow the engine to idle, without load, for five minutes. This will allow the engine components that operate at high temperatures, such as the turbocharger (if equipped) and exhaust system, to cool slightly before the engine itself is shut down.

0000008en

CAUTION

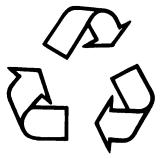

- **ALWAYS be environmentally responsible.**
- **Follow the guidelines of the EPA or other governmental agencies for the proper disposal of hazardous materials such as engine oil, diesel fuel and engine coolant. Consult the local authorities or reclamation facility.**
- **NEVER dispose of hazardous materials irresponsibly by dumping them into a sewer, on the ground, or into ground water or waterways.**
- **Failure to follow these procedures may seriously harm the environment.**

0000013en

Replace the fuel filter at specified intervals to prevent contaminants from adversely affecting the diesel fuel flow.

1. Stop the engine and allow it to cool.
2. Close the fuel cock of the fuel filter / water separator.
3. Turn the retaining ring **(Figure 5-14, (1))** to the left **(Figure 5-14, (2))**.

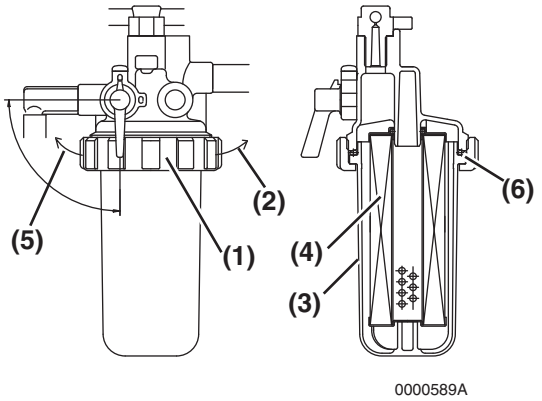

Figure 5-14

4. Carefully remove the cup **(Figure 5-14, (3))** and pour the fuel into an approved container and dispose of waste properly. Hold the bottom of the cup with a shop towel to prevent the fuel from dripping. Wipe up any spills immediately.
5. Remove the element **(Figure 5-14, (4))** by pulling it down.
6. Replace the element with a new one.

Applicable Fuel Filter Part No.	
3TNV72	119810-55650

7. Wash the inside of the cup with clean fuel.
8. Check the condition of the cup O-ring **(Figure 5-14, (6))**. Replace if necessary.
9. Reinstall the cup to the mounting flange and turn the retaining ring **(Figure 5-14, (1))** to the right **(Figure 5-14, (2))**. Hand-tighten only.
10. Open the fuel cock of the fuel filter / water separator.
11. Prime the fuel system. *See Priming the Fuel System on page 4-12.*
12. Check for fuel leaks.

Clean Fuel Filter / Water Separator

DANGER



FIRE AND EXPLOSION HAZARD!

- Diesel fuel is flammable and explosive under certain conditions.
- NEVER use diesel fuel as a cleaning agent.
- Failure to comply will result in death or serious injury.

0000012en

DANGER



FIRE AND EXPLOSION HAZARD!

- Diesel fuel is flammable and explosive under certain conditions.
- When you remove any fuel system component to perform maintenance (such as changing the fuel filter) place an approved container under the opening to catch the fuel.
- NEVER use a shop rag to catch the fuel. Vapors from the rag are flammable and explosive.
- Wipe up any spills immediately.
- Wear eye protection. The fuel system is under pressure and fuel could spray out when you remove any fuel system component.
- Failure to comply will result in death or serious injury.

0000009en

CAUTION

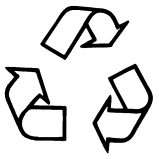

- ALWAYS be environmentally responsible.
- Follow the guidelines of the EPA or other governmental agencies for the proper disposal of hazardous materials such as engine oil, diesel fuel and engine coolant. Consult the local authorities or reclamation facility.
- NEVER dispose of hazardous materials irresponsibly by dumping them into a sewer, on the ground, or into ground water or waterways.
- Failure to follow these procedures may seriously harm the environment.

0000013en

Periodically clean the fuel filter / water separator element and inside the cup.

1. Position an approved container under the cup **(Figure 5-15, (1))** of the fuel filter / water separator to collect the contaminants.

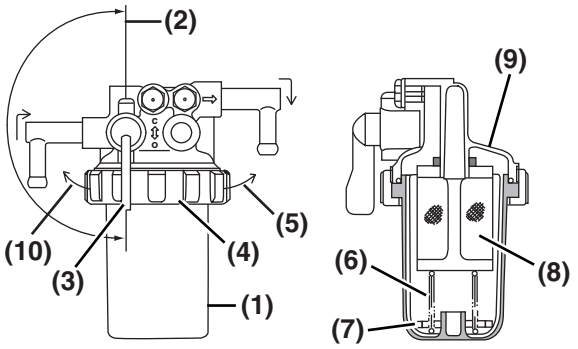

0000590B

Figure 5-15

2. Close **(Figure 5-15, (2))** the fuel cock **(Figure 5-15, (3))**.

3. Turn the retaining ring **(Figure 5-15, (4))** to the left **(Figure 5-15, (10))**.
4. Carefully remove the cup **(Figure 5-15, (1))** and pour the fuel into an approved container and dispose of properly. Hold the bottom of the cup with a shop towel to prevent the fuel from dripping. Wipe up any spills immediately.
5. Keep the retaining spring **(Figure 5-15, (6))** and float **(Figure 5-15, (7))** handy for reassembly.
6. Remove the element **(Figure 5-15, (8))** by pulling it down.
7. Replace the element with a new one.

Applicable Mesh Filter Part No.	
3TNV72	171081-55910

8. Wash the inside of the cup with clean diesel fuel.
9. Check the condition of the cup O-ring. Replace if necessary.
10. Put the float **(Figure 5-15, (7))** and retaining spring **(Figure 5-15, (6))** inside the cup.
11. Reinstall the cup to the mounting flange **(Figure 5-15, (9))** and turn the retaining ring **(Figure 5-15, (4))** to the right **(Figure 5-15, (5))**. Hand-tighten only.
12. Open the fuel cock **(Figure 5-15, (3))**.
13. Prime the fuel system. *See Priming the Fuel System on page 4-12.*
14. Check for fuel leaks.

Every 1000 Hours of Operation

Perform the following maintenance every 1000 hours of operation.

- **Drain, Flush and Refill Cooling System with New Coolant**
- **Adjust Intake / Exhaust Valve Clearance**

Drain, Flush and Refill Cooling System with New Coolant

DANGER



SCALD HAZARD!

- **NEVER remove the radiator cap if the engine is hot. Steam and hot engine coolant will spurt out and seriously burn you. Allow the engine to cool down before you attempt to remove the radiator cap.**
- **Tighten the radiator cap securely after you check the radiator. Steam can spurt out during engine operation if the cap is loose.**
- **ALWAYS check the level of the engine coolant by observing the reserve tank.**
- **Failure to comply will result in death or serious injury.**

0000002en

⚠ WARNING



BURN HAZARD!

- **Wait until the engine cools before you drain the engine coolant. Hot engine coolant may splash and burn you.**
- **Failure to comply could result in death or serious injury.**

0000016en

⚠ CAUTION

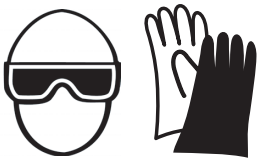

COOLANT HAZARD!

- **Wear eye protection and rubber gloves when you handle long life or extended life engine coolant. If contact with the eyes or skin should occur, flush eyes and wash immediately with clean water.**
- **Failure to comply may result in minor or moderate injury.**

0000005en

CAUTION

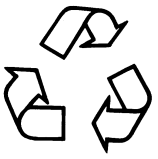

- **ALWAYS be environmentally responsible.**
- **Follow the guidelines of the EPA or other governmental agencies for the proper disposal of hazardous materials such as engine oil, diesel fuel and engine coolant. Consult the local authorities or reclamation facility.**
- **NEVER dispose of hazardous materials irresponsibly by dumping them into a sewer, on the ground, or into ground water or waterways.**
- **Failure to follow these procedures may seriously harm the environment.**

0000013en

Engine coolant contaminated with rust or scale reduces the cooling effect. Even when extended life engine coolant is properly mixed, the engine coolant gets contaminated as its ingredients deteriorate. Drain, flush and refill the cooling system with new coolant every 1000 hours or once a year, whichever comes first.

1. Allow engine and coolant to cool.
2. Remove the radiator cap **(Figure 5-16, (1))**.
3. Remove the drain plug or open the drain cock **(Figure 5-16, (2))** at the lower position of the radiator and drain the engine coolant.

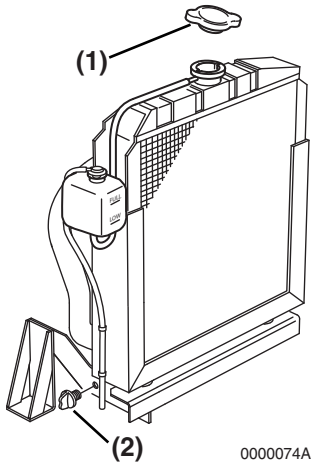

Figure 5-16

4. Drain the coolant from the engine block. Remove the coolant drain plug **(Figure 5-17, (1))** from the engine block.

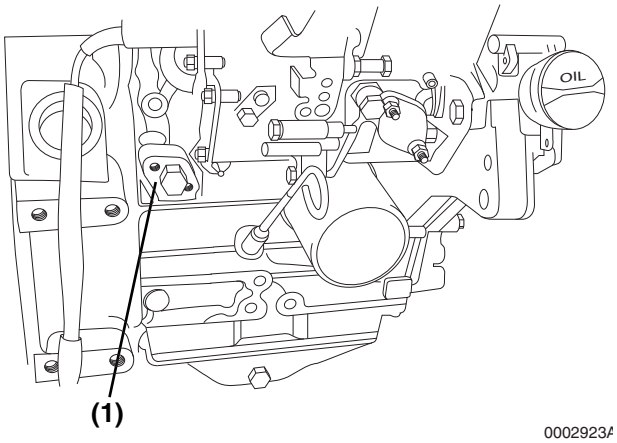

Figure 5-17

5. After draining the engine coolant, flush the radiator and engine block to remove any rust, scale and contaminants.
6. Reinstall and tighten the drain plug or close the drain cock at the radiator. Reinstall and tighten the engine block drain plug.
7. Fill radiator and engine with engine coolant. *See Filling Radiator with Engine Coolant on page 4-16.*

Adjust Intake / Exhaust Valve Clearance

Proper adjustment is necessary to maintain the correct timing for opening and closing the valves. Improper adjustment will cause the engine to run noisily, resulting in poor engine performance and engine damage. *See Measuring and Adjusting Valve Clearance on page 6-34*.

Every 1500 Hours of Operation

Perform the following maintenance every 1500 hours of operation.

- **Inspect, Clean and Test Fuel Injectors**
- **Inspect Crankcase Breather System**

Inspect, Clean and Test Fuel Injectors (if required)

⚠ WARNING



HIGH-PRESSURE HAZARD!

- **Avoid skin contact with the high-pressure diesel fuel spray caused by a fuel system leak such as a broken fuel injection line. High-pressure fuel can penetrate your skin and result in serious injury. If you are exposed to high-pressure fuel spray, obtain prompt medical treatment.**
- **NEVER check for a fuel leak with your hands. ALWAYS use a piece of wood or cardboard. Have your authorized Yanmar industrial engine dealer or distributor repair the damage.**
- **Failure to comply could result in death or serious injury.**

0000008en

Proper operation of the fuel injectors is required to obtain the optimum injection pattern for full engine performance. The EPA / ARB requires that the fuel injectors are inspected, cleaned and tested (if required) every 1500 hours. *See Testing of Fuel Injectors on page 7-24.*

This procedure is considered normal maintenance and is performed at the owner's expense. This procedure is not covered by the Yanmar Limited Warranty.

Inspect Crankcase Breather System

Proper operation of the crankcase breather system is required to maintain the emission requirements of the engine. The EPA / ARB requires that the crankcase breather system is inspected every 1500 hours.

There are three different crankcase breather systems used on the TNV engines. Only the non-turbo TNV engines crankcase breather system requires periodic maintenance.

The non-turbo TNV engines use a crankcase breather system that has a spring-backed diaphragm **(Figure 5-18, (1))** in the valve cover **(Figure 5-18, (2))**. When the crankcase pressure reaches a predetermined value, the diaphragm opens a passage that allows crankcase fumes to be routed to the intake manifold.

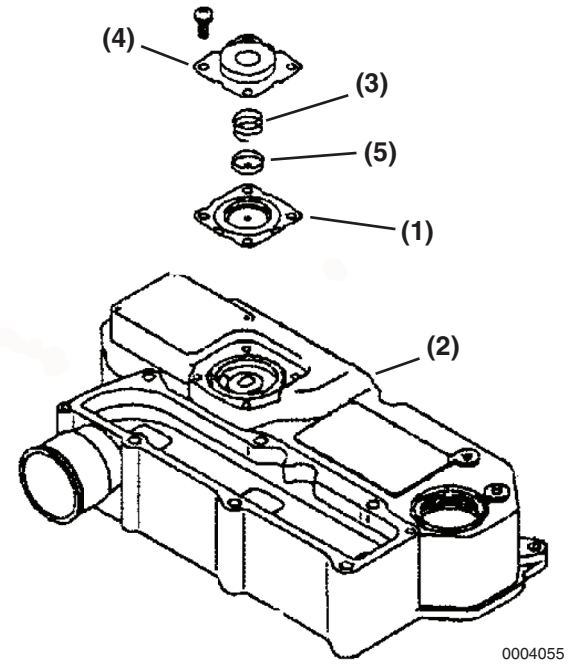

Figure 5-18

To inspect the diaphragm and spring **(Figure 5-18, (3))**:

1. Remove the bolts retaining the diaphragm cover **(Figure 5-18, (4))**.

2. Remove the diaphragm cover, spring, diaphragm plate **(Figure 5-18, (5))** and diaphragm.
3. Inspect the diaphragm for tears. Inspect the spring for distortion. Replace components if necessary.
4. Reinstall the diaphragm, diaphragm plate, spring and diaphragm cover. Tighten the diaphragm bolts to the specified torque. See *Tightening Torques for Standard Bolts and Nuts on page 4-22*.

Failure of the diaphragm and / or spring will cause the loss of pressure control and allow an excessive amount of crankcase fumes to be routed to the intake manifold. This could result in excessive deposits in the intake system, high engine exhaust smoke levels, excessive engine oil consumption, and / or engine run-on due to the burning of the engine oil.

Every 2000 Hours of Operation

Perform the following maintenance every 2000 hours of operation.

- **Check and Replace Fuel Hoses and Engine Coolant Hoses**
- **Lap the Intake and Exhaust Valves**

Check and Replace Fuel Hoses and Engine Coolant Hoses

CAUTION

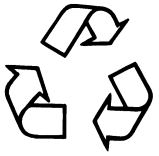

- **ALWAYS be environmentally responsible.**
- **Follow the guidelines of the EPA or other governmental agencies for the proper disposal of hazardous materials such as engine oil, diesel fuel and engine coolant. Consult the local authorities or reclamation facility.**
- **NEVER dispose of hazardous materials irresponsibly by dumping them into a sewer, on the ground, or into ground water or waterways.**
- **Failure to follow these procedures may seriously harm the environment.**

0000013en

Regularly check the fuel system and engine coolant system hoses. If they are cracked or degraded, replace them. Replace the hoses at least every two years. *See Check and Replace Fuel Hoses and Engine Coolant Hoses on page 5-37.*

Lap the Intake and Exhaust Valves

Adjustment is necessary to maintain proper contact of the valves and seats. *See Inspection of Intake and Exhaust Valves on page 6-27.*

This Page Intentionally Left Blank

Section 6

ENGINE

Page

Before You Begin Servicing 6-3
Introduction 6-5
Cylinder Head Specifications 6-5
- Adjustment Specifications 6-5
- Cylinder Head 6-5
- Intake / Exhaust Valve and Guide 6-6
- Push Rod 6-6
- Valve Spring 6-6
- Rocker Arm and Shaft 6-7

Camshaft and Timing Gear Train Specifications 6-7
- Camshaft 6-7
- Idler Gear Shaft and Bushing 6-8
- Timing Gear Backlash 6-8

Crankshaft and Pistons Specifications 6-8
- Crankshaft 6-8
- Crankshaft Reconditioning 6-9
- Thrust Bearing 6-9
- Piston 6-10
- Piston Ring 6-11
- Connecting Rod 6-12
- Tappet 6-13

Cylinder Block Specifications 6-13
- Cylinder Block 6-13

Special Torque Chart 6-14
- Torque for Bolts and Nuts 6-14

Special Service Tools 6-15
Measuring Instruments 6-17

Cylinder Head 6-20
Cylinder Head Components 6-20
Disassembly of Cylinder Head 6-21
Cleaning of Cylinder Head Components 6-25
Inspection of Cylinder Head Components 6-25
Reassembly of Cylinder Head 6-29
Measuring and Adjusting Valve Clearance 6-34
Cylinder Block 6-36
Crankshaft and Camshaft Components 6-36
Disassembly of Cylinder Block Components 6-37
Disassembly of Camshaft and Timing Components 6-38
Disassembly of Crankshaft and Piston Components 6-42
Inspection of Crankshaft and Camshaft Components 6-46
Reconditioning the Crankshaft 6-51
Honing and Boring 6-53
Reassembly of Crankshaft and Piston Components 6-54
Reassembly of Camshaft and Timing Components 6-60

BEFORE YOU BEGIN SERVICING

⚠ WARNING



To prevent possible eye injury, always wear SAFETY GLASSES while servicing the engine.

0000013en

⚠ WARNING



ENTANGLEMENT HAZARD!

- Stop the engine before you begin to service it.
- NEVER leave the key in the key switch when you are servicing the engine. Someone may accidentally start the engine and not realize you are servicing it. This could result in a serious injury.
- If you must service the engine while it is operating, remove all jewelry, tie back long hair, and keep your hands, other body parts and clothing away from moving / rotating parts.
- Failure to comply could result in death or serious injury.

0000010en

⚠ WARNING



FUME / BURN HAZARD!

- Always read and follow safety related precautions found on containers of hazardous substances like parts cleaners, primers, sealants and sealant removers.
- Failure to comply could result in death or serious injury.

0000014en

⚠ CAUTION



FLYING OBJECT HAZARD!

- ALWAYS wear eye protection when servicing the engine and when using compressed air or high-pressure water. Dust, flying debris, compressed air, pressurized water or steam may injure your eyes.
- Failure to comply may result in minor or moderate injury.

0000003en

CAUTION

NEVER use an engine starting aid such as ether. Engine damage will result.

0000009en

CAUTION

- Only use the engine oil specified. Other engine oils may affect warranty coverage, cause internal engine components to seize and / or shorten engine life.
- Prevent dirt and debris from contaminating the engine oil. Carefully clean the oil cap / dipstick and the surrounding area before you remove the cap.
- NEVER mix different types of engine oil. This may adversely affect the lubricating properties of the engine oil.
- NEVER overfill. Overfilling may result in white exhaust smoke, engine overspeed or internal damage.

0000005en

CAUTION

Any part which is found defective as a result of inspection or any part whose measured value does not satisfy the standard or limit must be replaced.

0000119en

CAUTION

- Only use the engine coolant specified. Other engine coolants may affect warranty coverage, cause an internal buildup of rust and scale and / or shorten engine life.
- Prevent dirt and debris from contaminating the engine coolant. Carefully clean the radiator cap and the surrounding area before you remove the cap.
- NEVER mix different types of engine coolants. This may adversely affect the properties of the engine coolant.

0000006en

CAUTION

Do not loosen or remove the four bolts retaining the fuel injection pump drive gear to the fuel injection pump hub. Do not disassemble the fuel injection pump drive gear from the hub. Correct fuel injection timing will be very difficult or impossible to achieve.

0000031en

CAUTION

Identify all parts and their location using an appropriate method. It is important that all parts are returned to the same position during the reassembly process.

0000080en

CAUTION

Keep the piston pin parts, piston assemblies, and connecting rod assemblies together to be returned to the same position during the reassembly process. Label the parts using an appropriate method.

0000088en

CAUTION

Do not allow the honing tool to operate in one position for any length of time. Damage to the cylinder wall will occur. Keep the tool in constant up-and-down motion.

0000090en

CAUTION

Any part determined to not meet the service standard or limit before the next service, as determined from the state of current rate of wear, should be replaced even though the part currently meets the service standard limit.

0000120en

INTRODUCTION

This section of the *Service Manual* describes servicing of the engine.

CYLINDER HEAD SPECIFICATIONS

Adjustment Specifications

Model	Valve Clearance
All	0.006 - 0.010 in. (0.15 - 0.25 mm)

Cylinder Head

Inspection Item			Standard	Limit	Reference Page
Combustion Surface Distortion (Flatness)			0.0020 in. (0.05 mm) or less	0.0059 in. (0.15 mm)	*See Valve Recession on page 6-27*
Valve Recession		Intake	0.0157 - 0.0236 in. (0.4 - 0.6 mm)	0.0354 in. (0.9 mm)	
		Exhaust	0.0157 - 0.0236 in. (0.4 - 0.6 mm)	0.0315 in. (0.8 mm)	
Valve Seat	Seat Angle	Intake	120°	-	*See Valve Face and Valve Seat on page 6-28*
		Exhaust	90°	-	
	Seat Correction Angle		40°, 150°	-	

Intake / Exhaust Valve and Guide

Inspection Item		Standard	Limit	Reference Page
Intake	Guide Inside Diameter	0.2362 - 0.2367 in. (6.000 - 6.012 mm)	0.2394 in. (6.08 mm)	*See Inspection of Valve Springs on page 6-28*
	Valve Stem Outside Diameter	0.2346 - 0.2352 in. (5.960 - 5.975 mm)	0.2323 in. (5.90 mm)	
	Oil Clearance	0.0010 - 0.0020 in. (0.025 - 0.052 mm)	0.0063 in. (0.15 mm)	
	Valve Stem Bend	-	0.0004 in. (0.010 mm)	
Exhaust	Guide Inside Diameter	0.2362 - 0.2367 in. (6.000 - 6.012 mm)	0.2394 in. (6.08 mm)	
	Valve Stem Outside Diameter	0.2341 - 0.2346 in. (5.945 - 5.960 mm)	0.2323 in. (5.90 mm)	
	Oil Clearance	0.0016 - 0.0026 in. (0.040 - 0.067 mm)	0.0067 in. (0.17 mm)	
	Valve Stem Bend	-	0.0004 in. (0.010 mm)	
Valve Guide Projection From Cylinder Head		0.3858 - 0.3937 in. (9.8 - 10.0 mm)	-	*See Reassembly of Valve Guides on page 6-29*
Valve Stem Seal Projection From Cylinder Head		0.429 - 0.441 in. (10.9 - 11.2 mm)		
Valve Guide Installation Method		Cold-fitted	-	

Push Rod

Inspection Item	Standard	Limit	Reference Page
Push Rod Bend	Less than 0.0012 in. (0.03 mm)	0.0012 in. (0.03 mm)	*See Push Rod Bend on page 6-25*

Valve Spring

Inspection Item	Standard	Limit	Reference Page
Free Length	1.4882 in. (37.8 mm)	-	*See Inspection of Valve Springs on page 6-28*
Squareness	-	0.0512 in. (1.3 mm)	

Rocker Arm and Shaft

Inspection Item	Standard	Limit	Reference Page
Arm Shaft Hole Diameter	0.4724 - 0.4732 in. (12.000 - 12.020 mm)	0.4752 in. (12.07 mm)	*See Inspection of Rocker Arm Assembly on page 6-26*
Shaft Outside Diameter	0.4711 - 0.4718 in. (11.966 - 11.984 mm)	0.4701 in. (11.94 mm)	
Oil Clearance	0.0006 - 0.0021 in. (0.016 - 0.054 mm)	0.0051 in. (0.13 mm)	

CAMSHAFT AND TIMING GEAR TRAIN SPECIFICATIONS

Camshaft

Inspection Item			Standard	Limit	Reference Page
End Play			0.0020 - 0.0059 in. (0.05 - 0.15 mm)	0.0098 in. (0.25 mm)	*See Removal of Camshaft on page 6-41*
Bend (1/2 the dial gauge reading)			0 - 0.0008 in. (0 - 0.02 mm)	0.0020 in. (0.05 mm)	*See Inspection of Camshaft on page 6-52*
Cam Lobe Height			1.3439 - 1.3490 in. (34.135 - 34.265 mm)	1.3343 in. (33.89 mm)	
Shaft Outside Diameter / Bearing Inside Diameter	Gear End	Bushing Inside Diameter	1.5748 - 1.5778 in. (40.000 - 40.075 mm)	1.5807 in. (40.150 mm)	
		Camshaft Outside Diameter	1.5724 - 1.5732 in. (39.940 - 39.960 mm)	1.5711 in. (39.905 mm)	
		Oil Clearance	0.0016 - 0.0053 in. (0.040 - 0.135 mm)	0.0096 in. (0.245 mm)	
	Intermediate	Bushing Inside Diameter	1.5748 - 1.5758 in. (40.000 - 40.025 mm)	1.5787 in. (40.100 mm)	
		Camshaft Outside Diameter	1.5713 - 1.5722 in. (39.910 - 39.935 mm)	1.5699 in. (39.875 mm)	
		Oil Clearance	0.0026 - 0.0045 in. (0.065 - 0.115 mm)	0.0089 in. (0.225 mm)	
	Flywheel End	Bushing Inside Diameter	1.5748 - 1.5758 in. (40.000 - 40.100 mm)	1.5787 in. (40.100 mm)	
		Camshaft Outside Diameter	1.5724 - 1.5732 in. (39.940 - 39.960 mm)	1.5711 in. (39.905 mm)	
		Oil Clearance	0.0016 - 0.0033 in. (0.040 - 0.085 mm)	0.0077 in. (0.195 mm)	

Idler Gear Shaft and Bushing

Inspection Item	Standard	Limit	Reference Page
Shaft Outside Diameter	1.4547 - 1.4557 in. (36.950 - 36.975 mm)	1.4528 in. (36.900 mm)	*See Inspection of Idler Gear and Shaft on page 6-53*
Bushing Inside Diameter	1.4567 - 1.4577 in. (37.000 - 37.025 mm)	1.4596 in. (37.075 mm)	
Oil Clearance	0.0010 - 0.0030 in. (0.025 - 0.075 mm)	0.0069 in. (0.175 mm)	

Timing Gear Backlash

Inspection Item	Standard	Limit	Reference Page
Crank Gear, Cam Gear, Idler Gear, Fuel Injection Pump Gear and PTO Gear	0.0024 - 0.0047 in. (0.06 - 0.12 mm)	0.0055 in. (0.14 mm)	*See Checking Timing Gear Backlash on page 6-38*

CRANKSHAFT AND PISTONS SPECIFICATIONS

Crankshaft

Note: Check appropriate parts catalog for undersized replacement main bearing inserts.

Inspection Item		Standard	Limit	Reference Page
Bend (1/2 the dial gauge reading)		-	0.0008 in. (0.02 mm)	*See Inspection of Crankshaft on page 6-51*
Roundness		0.0004 in.(0.01 mm) or less	0.0008 in. (0.02 mm)	
Connecting Rod Journals	Journal Outside Diameter	1.6517 - 1.6520 in. (41.952 - 41.962 mm)	1.6497 in. (42.902 mm)	
	Bearing Inside Diameter	1.6528 - 1.6536 in. (41.982 - 42.002 mm)	-	
	Bearing Insert Thickness	0.0592 - 0.0594 in. (1.503 - 1.509 mm)	-	
	Oil Clearance	0.0008 - 0.0020 in. (0.020 - 0.050 mm)	0.0043 in. (0.110 mm)	

(Crankshaft Cont.)

Inspection Item		Standard	Limit	Reference Page
Main Bearing Journal	Journal Outside Diameter	1.8485 - 1.8489 in. (46.952 - 46.962 mm)	1.8465 in. (46.902 mm)	*See Inspection of Crankshaft on page 6-51*
	Bearing Inside Diameter	1.8497 - 1.8505 in. (46.982 - 47.002 mm)	-	
	Bearing Insert Thickness	0.0791 - 0.0793 in. (2.009 - 2.014 mm)	-	
	Oil Clearance	0.0008 - 0.0020 in. (0.020 - 0.050 mm)	0.0047 in. (0.120 mm)	

Crankshaft Reconditioning

Item	Finishing Precision	Reference Page
Connecting Rod Journal Undersize Finished Size	1.6418 - 1.6422 in. (41.702 - 41.712 mm)	*See Reconditioning the Crankshaft on page 6-51*
Main Bearing Journal Undersize Finished Size	1.8387 - 1.8391 in. (46.702 - 46.712 mm)	
Journal Radius	0.138 - 0.150 in. (3.5 - 3.8 mm)	
Journal Face Finish	0.8S (Super Polish)	
Thrust Face Finish	1.6	

Thrust Bearing

Inspection Item	Standard	Limit	Reference Page
Crankshaft End Play - All Models	0.0044 - 0.0098 in. (0.111 - 0.250 mm)	0.0110 in. (0.28 mm)	See Removal of Crankshaft on page 6-44
Bearing Thickness	0.0760 - 0.0780 in. (1.930 - 1.980 mm)	0.0728 in. (1.850 mm)	

Piston

Inspection Item		Standard	Limit	Reference Page
Piston Outside Diameter (Measure at 90° to the Piston Pin.)	3TNV72	2.8331 - 2.8343 in. (71.960 - 71.990 mm)	2.8313 in. (71.915 mm)	*See Inspection of Pistons, Piston Rings and Wrist Pin on page 6-48*
Piston Diameter Measurement Location (Upward From the Bottom of the Piston)		0.8661 - 0.9843 in. (22.0 - 25.0 mm)	-	
Piston-to-Cylinder Clearance	3TNV72	0.0012 - 0.0020 in. (0.030 - 0.050 mm)	-	
Wrist Pin	Hole Inside Diameter	0.8661 - 0.8665 in. (22.000 - 22.009 mm)	0.8677 in. (220.039 mm)	
	Pin Outside Diameter	0.8659 - 0.8661 in. (21.995 - 22.000 mm)	0.8648 in. (21.965 mm)	
	Oil Clearance	0.0000 - 0.0006 in. (0.000 - 0.014 mm)	0.0029 in. (0.074 mm)	

Piston Ring

Model	Inspection Item		Standard	Limit	Reference Page
3TNV72	Top Ring	Ring Groove Width	0.0610 - 0.0618 in. (1.550 - 1.570 mm)	-	*See Inspection of Pistons, Piston Rings and Wrist Pin on page 6-48*
		Ring Width	0.0579 - 0.0587 in. (1.470 - 1.490 mm)	0.0571 in. (1.450 mm)	
		Side Clearance	0.0024 - 0.0039 in. (0.060 - 0.100 mm)	-	
		End Clearance	0.0059 - 0.0118 in. (0.150 - 0.300 mm)	0.0154 in. (0.390 mm)	
	Second Ring	Ring Groove Width	0.0606 - 0.0614 in. (1.540 - 1.560 mm)	0.0654 in. (1.660 mm)	
		Ring Width	0.0579 - 0.0587 in. (1.470 - 1.490 mm)	0.0571 in. (1.950 mm)	
		Side Clearance	0.0020 - 0.0035 in. (0.050 - 0.090 mm)	0.0083 in. (0.210 mm)	
		End Clearance	0.0071 - 0.0130 in. (0.180 - 0.33 mm)	0.0165 in. (0.42 mm)	
	Oil Ring	Ring Groove Width	0.1185 - 0.1193 in. (3.010 - 3.030 mm)	0.1232 in. (3.130 mm)	
		Ring Width	0.1170 - 0.1177 in. (2.970 - 2.990 mm)	0.1161 in. (2.950 mm)	
		Side Clearance	0.0008 - 0.0024 in. (0.020 - 0.060 mm)	0.0071 in. (0.180 mm)	
		End Clearance	0.0059 - 0.0138 in. (0.150 - 0.350 mm)	0.0173 in. (0.440 mm)	

Connecting Rod

Connecting Rod Small End

Inspection Item	Standard	Limit	Reference Page
Wrist Pin Bushing Inside Diameter	0.8671 - 0.8676 in. (22.025 - 22.038 mm)	0.8688 in. (22.068 mm)	*See Inspection of Connecting Rod on page 6-49*
Wrist Pin Outside Diameter	0.8658 - 0.8661 in. (21.991 - 22.000 mm)	0.8647 in. (21.963 mm)	
Oil Clearance	0.0010 - 0.0019 in. (0.025 - 0.047 mm)	0.0041 in. (0.105 mm)	

Connecting Rod Big End

Inspection Item	Standard	Limit	Reference Page
Side Clearance	0.0079 - 0.0157 in. (0.20 - 0.40 mm)	-	*See Inspection of Connecting Rod on page 6-49*
Bearing Inside Diameter and Oil Clearance	*See Crankshaft on page 6-8*		

Connecting Rod Distortion

Model	Inspection Item	Standard	Limit	Reference Page
All Models	Twist and Bend per 3.937 in.(100 mm)	Less than 0.001 in. (0.03 mm)	0.003 in. (0.08 mm)	*See Inspection of Connecting Rod on page 6-49*

Tappet

Inspection Item	Standard	Limit	Reference Page
Tappet Bore (Block) Inside Diameter	0.8268 - 0.8276 in. (21.000 - 21.021 mm)	0.8284 in. (21.041 mm)	*See Inspection of Tappets on page 6-50*
Tappet Stem Outside Diameter	0.8239 - 0.8252 in. (20.927 - 20.960 mm)	0.8231 in. (20.907 mm)	
Oil Clearance	0.0016 - 0.0037 in. (0.040 - 0.094 mm)	0.0053 in. (0.134 mm)	

CYLINDER BLOCK SPECIFICATIONS

Cylinder Block

Inspection Item	Model	Standard	Limit	Reference Page
Cylinder Inside Diameter	3TNV72	2.8346 - 2.8358 in. (72.000 - 72.030 mm)	2.7638 in. (70.200 mm)	*See Inspection of Cylinder Block on page 6-47*
Cylinder Bore	Roundness	0.0004 in. (0.01 mm) or less	0.0012 in. (0.03 mm)	
	Taper			

SPECIAL TORQUE CHART

Torque for Bolts and Nuts

Component		Thread Diameter and Pitch	Tightening Torque	Lubricating Oil Application (Thread Portion and Seat Surface)	Reference Page
Cylinder Head Bolts		M9 x 1.25 mm	40 - 43 ft·lb (53.9 - 57.9 N·m; 5.5 - 5.9 kgf·m)	Applied	*See Reassembly of Cylinder Head on page 6-31*
Connecting Rod Bolts		M7 x 1.0 mm	17 - 20 ft·lb (22.6 - 27.5 N·m; 2.3 - 2.8 kgf·m)	Applied	*See Installation of Pistons on page 6-58*
Flywheel Bolts		M10 x 1.25 mm	59 - 64 ft·lb (80.4 - 86.4 N·m; 8.2 - 8.8 kgf·m)	Applied	*See Installation of Crankshaft on page 6-57*
Main Bearing Cap Bolts		M10 x 1.25 mm	56 - 60 ft·lb (75.5 - 81.5 N·m; 7.7 - 8.3 kgf·m)	Applied	*See Installation of Crankshaft on page 6-57*
Crankshaft Pulley Bolts	Cast FC250	M12 x 1.25 mm	61 - 69 ft·lb (83.4 - 93.1 N·m; 8.5 - 9.5 kgf·m)	Applied	*See Installation of Crankshaft on page 6-57*
	Forged PS48C		83 - 90 ft·lb (113 - 123 N·m; 11.5 - 12.5 kgf·m)		
Glow Plug		M10 x 1.25	11 - 15 ft·lb (14.7 - 19.6 N·m; 1.5 - 2.0 kgf·m)	Not Applied	*See Reassembly of Intake Manifold / Valve Cover on page 6-33*

See Tightening Torques for Standard Bolts and Nuts on page 4-22 for standard hardware torque values.

SPECIAL SERVICE TOOLS

Note: Tools not having Yanmar part numbers must be acquired locally.

<table>
<tr><th>No</th><th>Tool Name</th><th>Applicable Model and Tool Size</th><th>Illustration</th></tr>
<tr><td>1</td><td>Valve Guide Tool (For Removing Valve Guides)</td><td>
<table>
<tr><td>L1</td><td>L2</td><td>d1</td><td>d2</td></tr>
<tr><td>0.787 in. (20 mm)</td><td>2.953 in. (75 mm)</td><td>0.217 in. (5.5 mm)</td><td>0.374 in. (9.5 mm)</td></tr>
<tr><td colspan="4">Locally Manufactured</td></tr>
</table>
</td><td>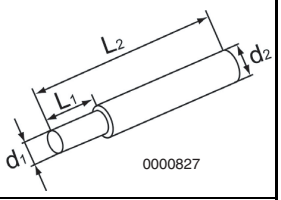
</td></tr>
<tr><td>2</td><td>Valve Guide Tool (For Installing Valve Guides)</td><td>
<table>
<tr><td>L1</td><td>L2</td><td>d1</td><td>d2</td></tr>
<tr><td>0.394 in. (10 mm)</td><td>2.362 in. (60 mm)</td><td>0.433 in. (11 mm)</td><td>0.669 in. (17 mm)</td></tr>
<tr><td colspan="2">Locally Manufactured</td><td colspan="2">Allowance L1: 0 to -0.0118 in. (0 to -0.3 mm)</td></tr>
</table>
</td><td>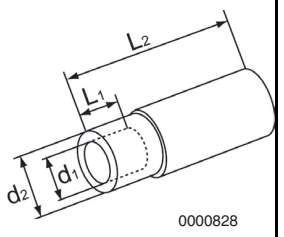
</td></tr>
<tr><td>3</td><td>Wrist Pin Bushing Tool (For Removing / Installing of Wrist Pin Bushings)</td><td>
<table>
<tr><td>L1</td><td>L2</td><td>d1</td><td>d2</td></tr>
<tr><td>0.984 in. (25 mm)</td><td>3.346 in. (85 mm)</td><td>0.866 in. (22 mm)</td><td>0.984 in. (25 mm)</td></tr>
<tr><td colspan="2">Locally Manufactured</td><td>Allowance d1: -0.0118 to -0.0236 in. (-0.3 to -0.6 mm)</td><td>Allowance d2: -0.0118 to -0.0236 in. (-0.3 to -0.6 mm)</td></tr>
</table>
</td><td>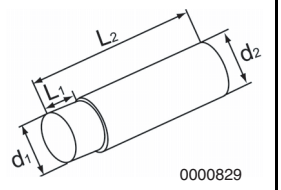
</td></tr>
<tr><td>4</td><td>Valve Spring Compressor (For Removing / Installing Valve Springs)</td><td>Yanmar Part No. 129100-92630</td><td>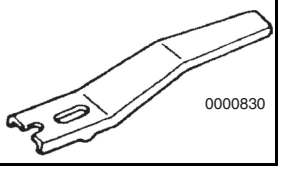
</td></tr>
</table>

<table>
<tr><th>No</th><th>Tool Name</th><th>Applicable Model and Tool Size</th><th>Illustration</th></tr>
<tr><td>5</td><td>Stem Seal Tool
(for Installing
Stem Seals)</td><td>
<table>
<tr><th>d1</th><th>d2</th><th>d3</th><th>L1</th><th>L2</th><th>L3</th></tr>
<tr><td>0.591 in.
(15 mm)</td><td>0.827 in.
(21 mm)</td><td>0.472 in.
(12 mm)</td><td>0.433 in.
(11 mm)</td><td>2.559 in.
(65 mm)</td><td>0.157 in.
(4 mm) or
more</td></tr>
</table>
Allowance:
d1: ±0.00787 in. (±0.2 mm)
L1: ±0.00393 in. (±0.1 mm)
Locally Manufactured</td><td>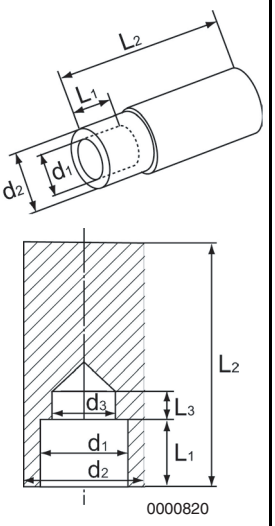
</td></tr>
<tr><td>6</td><td>Camshaft
Bushing Tool
(For Removing
Camshaft
Bushing)</td><td>
<table>
<tr><th>L1</th><th>L2</th><th>d1</th><th>d2</th></tr>
<tr><td>0.709 in.
(18 mm)</td><td>2.756 in.
(70 mm)</td><td>1.772 in.
(45 mm)</td><td>1.890 in.
(48 mm)</td></tr>
<tr><td colspan="2">Locally Manufactured</td><td>Allowance d1:
-0.0118 to
-0.0236 in.
(-0.3 to -0.6
mm)</td><td>Allowance d2:
-0.0118 to
-0.0236 in.
(-0.3 to -0.6
mm)</td></tr>
</table></td><td>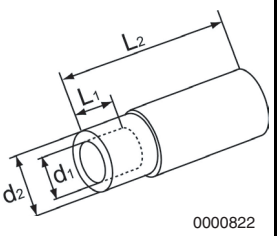
</td></tr>
<tr><td>7</td><td>Flex-Hone
(For Preparing
Cylinder Walls)</td><td>
<table>
<tr><th>Yanmar Part No.</th><th>Cylinder Bore</th></tr>
<tr><td>129400-92410</td><td>2.756 - 2.992 in.
(70 - 76 mm)</td></tr>
</table></td><td>
</td></tr>
<tr><td>8</td><td>Piston Ring
Compressor
(For Installing
Pistons)</td><td>Yanmar Part No. 955500-02476
The Piston Insertion Tool is Applicable for
2.362 - 4.921 in. (60 - 125 mm) Diameter Pistons</td><td>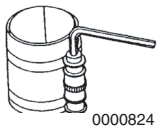
</td></tr>
<tr><td>9</td><td>Piston Ring Tool
(For Removing/
Installing of
Piston Rings)</td><td>Available Locally</td><td>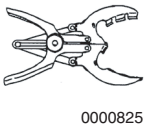
</td></tr>
</table>

MEASURING INSTRUMENTS

No.	Instrument Name	Application	Illustration
1	Dial Indicator (Available Locally)	Measure shaft bend and end play	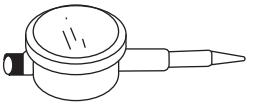 0000831
2	Test Indicator (Available Locally)	Measurements of narrow or deep portions that cannot be measured by dial gauge	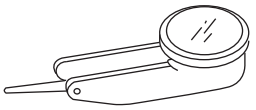 0000832
3	Magnetic Stand (Available Locally)	For holding the dial gauge when measuring.	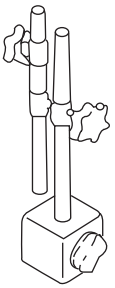 0000833
4	Micrometer (Available Locally)	For measuring the outside diameters of crankshaft, pistons, piston pins, etc.	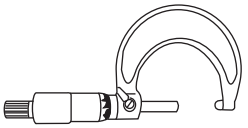 0000834
5	Cylinder Bore Gauge (Available Locally)	For measuring the inside diameters of cylinder liners, bearing bores, etc.	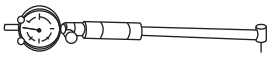 0000835
6	Calipers (Available Locally)	For measuring outside diameters, depth, thickness and width	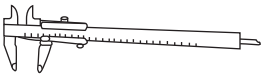 0000836
7	Depth Micrometer (Available Locally)	For measuring of valve recession	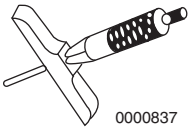 0000837
8	Square (Available Locally)	For measuring valve spring inclination and straightness of parts	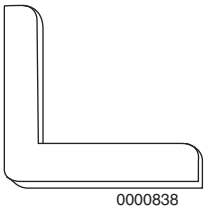 0000838

(Measuring instruments Cont.)

No.	Instrument Name	Application	Illustration
9	V-Block (Available Locally)	For measuring shaft bend	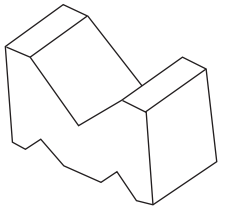 0000839
10	Torque Wrench (Available Locally)	For tightening nuts and bolts to the specified torque	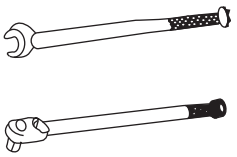 0000840
11	Feeler Gauge (Available Locally)	For measuring piston ring gaps, piston ring clearance, and valve adjustment clearance	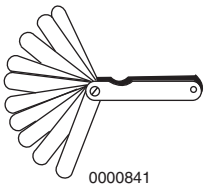 0000841

This Page Intentionally Left Blank

CYLINDER HEAD

Cylinder Head Components

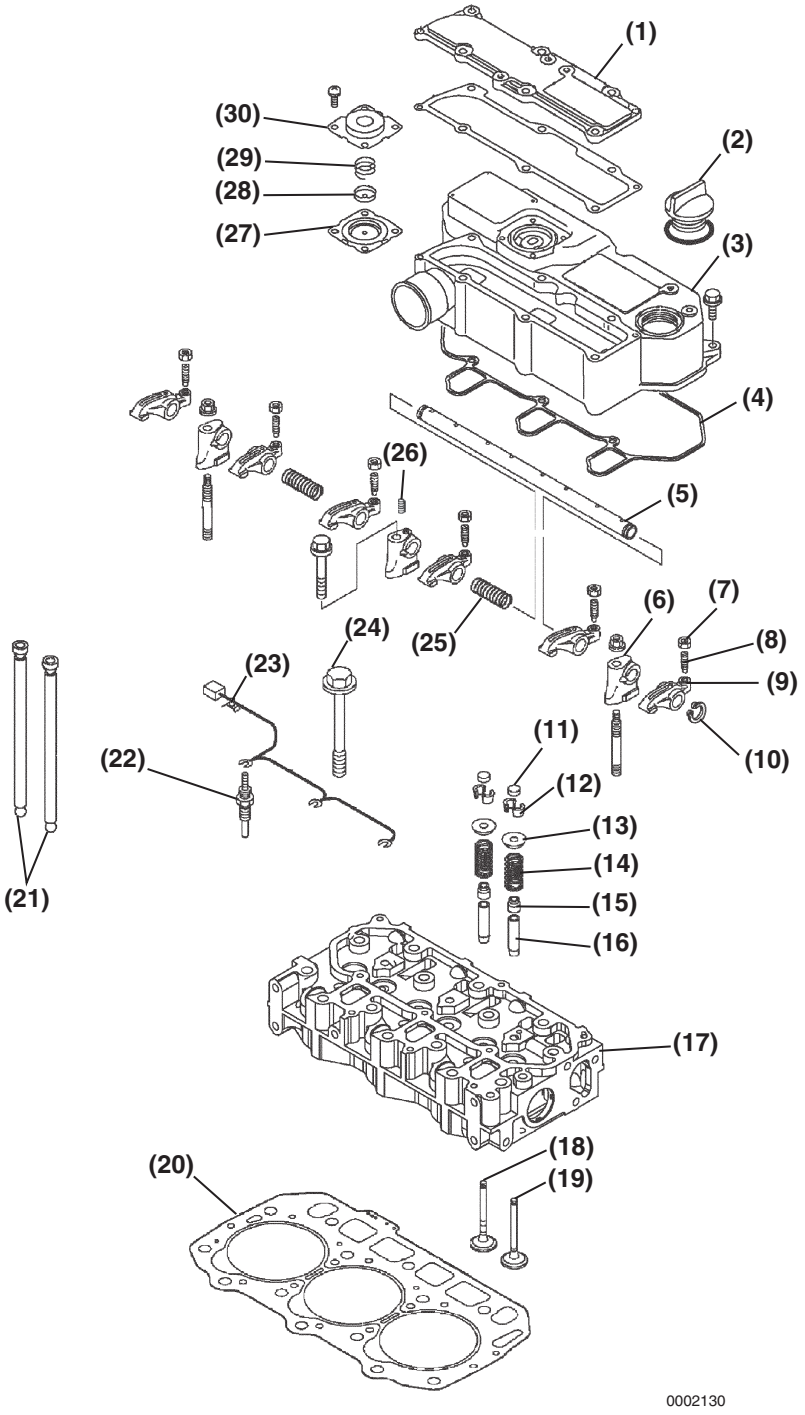

Figure 6-1

1 – Baffle Plate
2 – Oil Fill Cap
3 – Valve Cover / Intake Manifold
4 – Gasket
5 – Rocker Arm Shaft
6 – Rocker Arm Shaft Support
7 – Adjuster Lock Nut
8 – Valve Adjuster Screw
9 – Rocker Arm
10 – Circlip
11 – Valve Cap
12 – Keeper
13 – Valve Spring Retainer
14 – Valve Spring
15 – Valve Stem Seal
16 – Valve Guide
17 – Cylinder Head
18 – Exhaust Valve
19 – Intake Valve
20 – Cylinder Head Gasket
21 – Push Rod (2 per cylinder)
22 – Glow Plug
23 – Glow Plug Wiring Harness
24 – Cylinder Head Bolt

Disassembly of Cylinder Head

Prepare a clean, flat working surface on a workbench large enough to accommodate the cylinder head assembly. Discard all gaskets, O-rings and seals. Use new gaskets, O-rings and seals on reassembly of cylinder head.

IMPORTANT

Mark all valve train components so they can be installed in their original locations.

Note: Record all measurements taken during disassembly.

1. Drain coolant from engine into a suitable container. *See Drain, Flush and Refill Cooling System with New Coolant on page 5-33.*

CAUTION

Identify all parts and their location using an appropriate method. It is important that all parts are returned to the same position during the reassembly process.

0000080en

2. Remove the coolant pump. *See Disassembly of Engine Coolant Pump on page 8-7.*
3. Remove the high-pressure fuel lines and fuel injectors from the cylinder head. *See Removal of Fuel Injectors on page 7-23.*

Removal of Intake Manifold / Valve Cover

1. Remove the intake manifold bolts **(Figure 6-2, (1))** and valve cover bolts **(Figure 6-2, (2))**.
2. Remove the valve cover / intake manifold **(Figure 6-2, (3))**. Discard gasket **(Figure 6-2, (4))**.

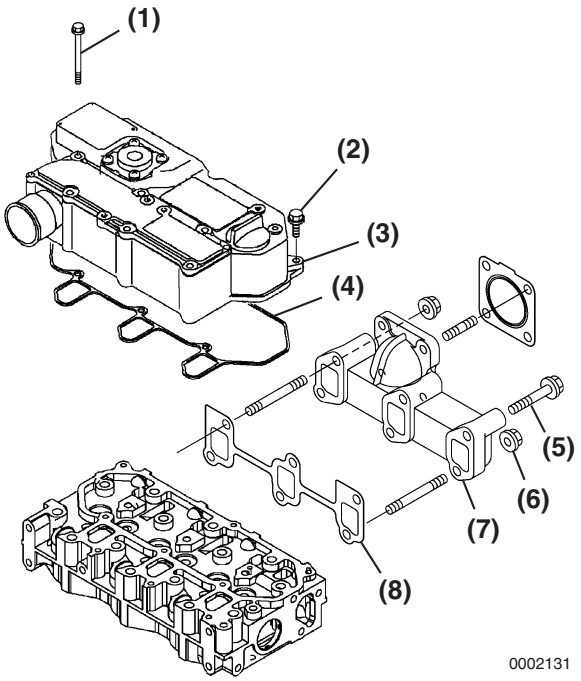

Figure 6-2

3. Remove the exhaust manifold bolts **(Figure 6-2, (5))** and nuts **(Figure 6-2, (6))**. Remove the exhaust manifold **(Figure 6-2, (7))** and the exhaust manifold gasket **(Figure 6-2, (8))**.

Removal of Glow Plugs

1. Disconnect the glow plug harness **(Figure 6-3, (2))** from the glow plugs **(Figure 6-3, (1))**.
2. Remove the glow plugs from the cylinder head.

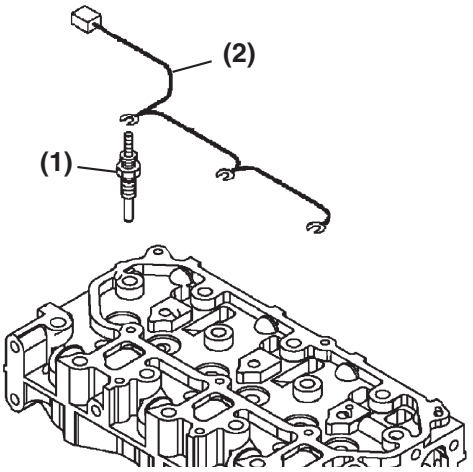

Figure 6-3

Removal of Rocker Arm Assembly

1. Remove the bolts **(Figure 6-4, (1))** and nuts **(Figure 6-4, (2))** that retain the rocker arm shaft supports.
2. Remove the rocker arm shaft assembly from the cylinder head.

Note: Identify the push rods so they can be reinstalled in their original locations.

3. Remove the push rods and identify for reinstallation.

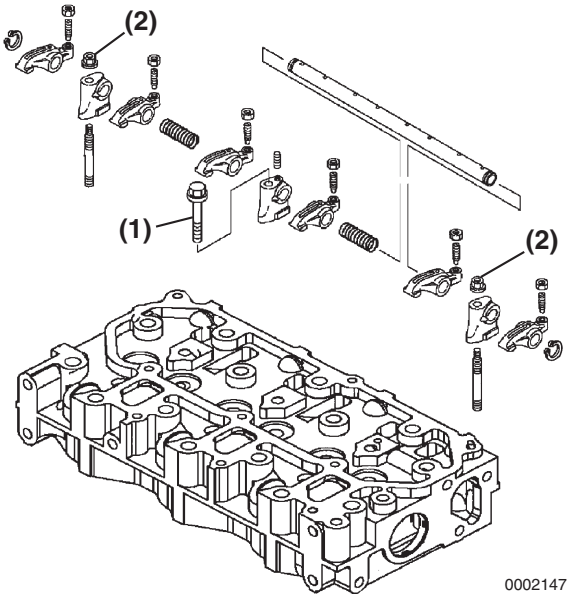

Figure 6-4

Disassembly of Rocker Arm Assembly

1. Remove the rocker arm shaft alignment set screw **(Figure 6-5, (6))** from support **(Figure 6-5, (5))**.

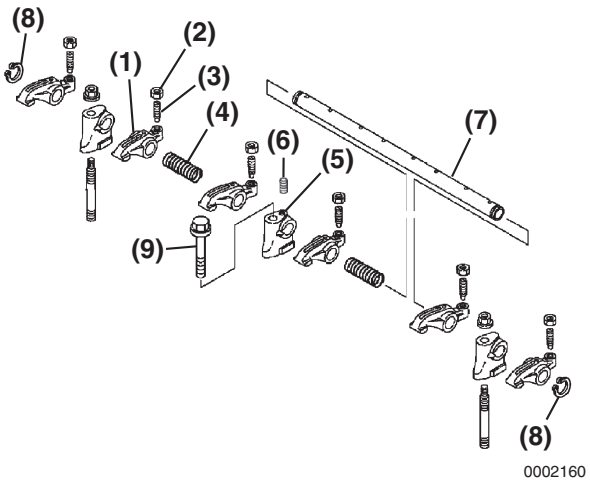

Figure 6-5

Note: On 3-cylinder models, the set screw is located in the center support. On 2-cylinder models, the set screw is located in the front (cooling fan) end support.

2. Remove two circlips **(Figure 6-5, (8))**.

Note: The rocker arm shaft fits tightly in the rocker arm supports. Clamp the support in a padded vise. Twist and pull out on the rocker arm shaft to remove. Reverse this process when installing the rocker arm shaft into the supports.

3. Slide the rocker arm shaft **(Figure 6-5, (7))** out of the rocker arm supports **(Figure 6-5, (5))**, springs **(Figure 6-5, (4)),** and rocker arms **(Figure 6-5, (1))**.

Note: Mark the rocker arms so they can be reinstalled with the original matching valve and pushrod.

4. Remove the valve adjusting screw **(Figure 6-5, (3))** and lock nut **(Figure 6-5, (2))** from the rocker arms. Mark parts so they can be reinstalled on the same rocker arm.

Removal of Cylinder Head

1. Loosen the cylinder head bolts following the sequence shown in **Figure 6-6**.

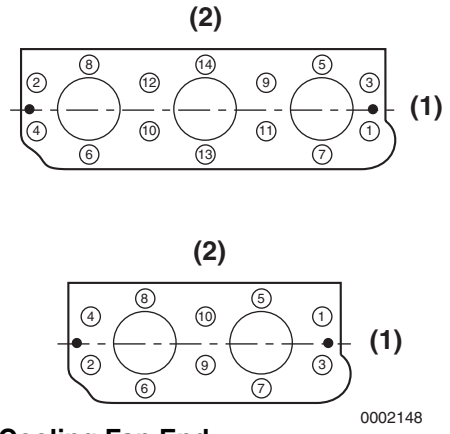

1 – Cooling Fan End
2 – Camshaft Side

Figure 6-6

2. Remove the cylinder head bolts **(Figure 6-7, (1))**.
3. Lift the cylinder head away from the cylinder block. Discard the cylinder head gasket **(Figure 6-7, (2))**. Position the cylinder head on the work bench to prevent damage to the combustion surface.

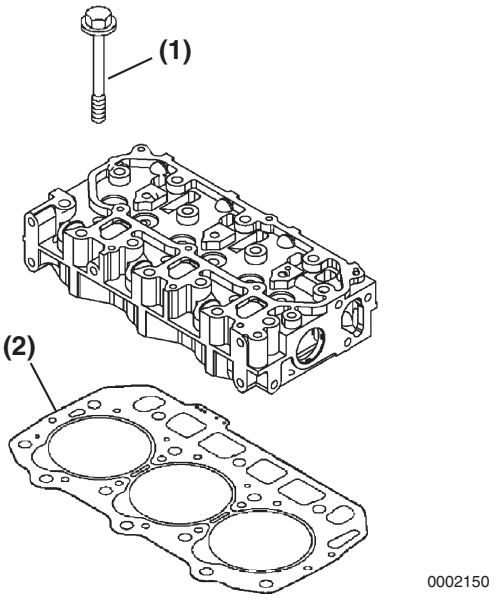

Figure 6-7

Removal of Intake / Exhaust Valves

1. Put the cylinder head on the work bench with the combustion side down **(Figure 6-8)**.

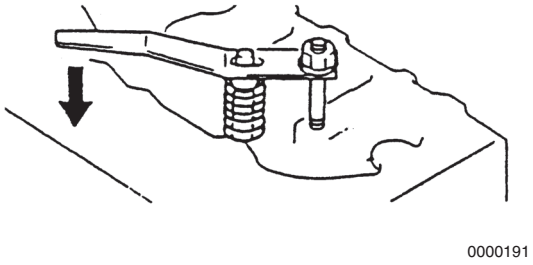

Figure 6-8

2. Remove the valve stem cap **(Figure 6-9, (1))** and keep with the valve it was installed on.
3. Using the valve spring compressor tool, compress one of the valve springs **(Figure 6-8)**.
4. Remove the valve keepers **(Figure 6-9, (2))**.
5. Slowly release the tension on the valve spring.
6. Remove the spring retainer **(Figure 6-9, (3))** and valve spring **(Figure 6-9, (4))**.

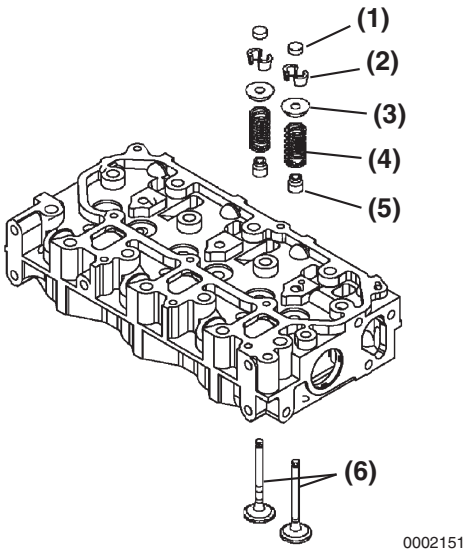

Figure 6-9

7. Repeat procedure with all remaining valves.

Note: If the valves are to be reused, identify them so they can be reinstalled in their original location.

8. Turn the cylinder head so the exhaust port side faces down. Remove the intake and exhaust valves **(Figure 6-9, (6))** from the cylinder head.
9. Remove the valve stem seals **(Figure 6-9, (5)).**

Removal of Valve Guides

Note: Removal of valve guides should be postponed until inspection and measurement procedures have been performed. *See Inspection of Valve Guides on page 6-26*.

If the valve guides are not within specifications, use a drift pin and hammer to drive the valve guides **(Figure 6-10, (1))** out of the cylinder head.

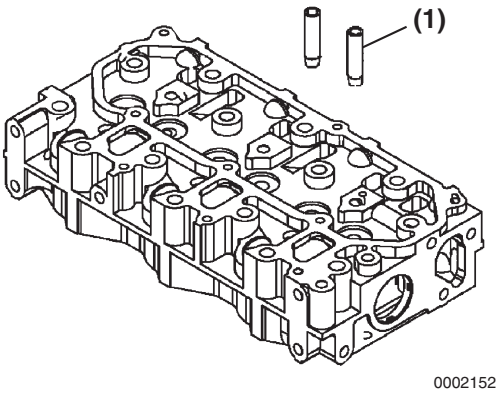

Figure 6-10

Cleaning of Cylinder Head Components

⚠ WARNING



FUME / BURN HAZARD!

- **Always read and follow safety related precautions found on containers of hazardous substances like parts cleaners, primers, sealants and sealant removers.**
- **Failure to comply could result in death or serious injury.**

0000014en

Thoroughly clean all components using a non-metallic brush and an appropriate solvent. Each part must be free of carbon, metal filings and other debris.

Inspection of Cylinder Head Components

Visually inspect the parts. Replace any parts that are obviously discolored, heavily pitted or otherwise damaged. Discard any parts that do not meet its specified limits.

CAUTION

Any part which is found defective as a result of inspection or any part whose measured value does not satisfy the standard or limit must be replaced.

0000119en

CAUTION

Any part determined to not meet the service standard or limit before the next service, as determined from the state of current rate of wear, should be replaced even though the part currently meets the service standard limit.

0000120en

IMPORTANT

Mark all valve train components so they can be installed in their original locations.

Note: Record all measurements taken during inspection.

Inspection of Push Rods

Push Rod Bend

Determine if the bend of the push rods is within the specified limit.

1. Place the push rods on a flat inspection block or layout bed.
2. Roll the push rods until a gap can be observed between a portion of the push rod and the surface of the block or layout bed.
3. Use a feeler gauge to measure the gap **(Figure 6-11)**. *See Push Rod on page 6-6 for the service limit.*

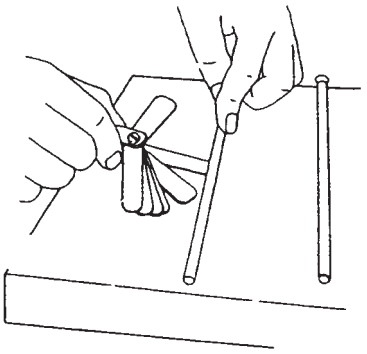

0000204

Figure 6-11

Inspection of Rocker Arm Assembly

Rocker Arm Shaft Hole Diameter

Use a telescoping gauge and micrometer to measure the inside diameter of all the rocker arm support brackets and the rocker arms **(Figure 6-12)**. Record the measurements. *See Rocker Arm and Shaft on page 6-7 for the service limit.*

Inspect contact areas **(Figure 6-12, (1))** for excessive wear or damage.

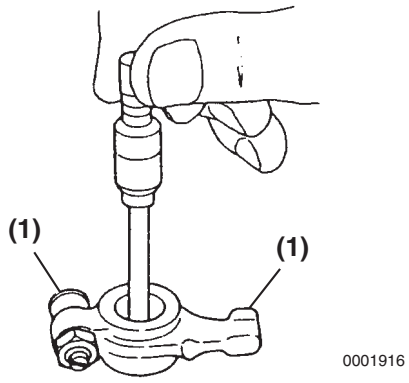

Figure 6-12

Rocker Arm Shaft Outside Diameter

Use a micrometer to measure rocker arm shaft diameter. Measure at each rocker arm location in two directions 90° apart **(Figure 6-13)**. Record the measurements. *See Rocker Arm and Shaft on page 6-7 for the service limit.*

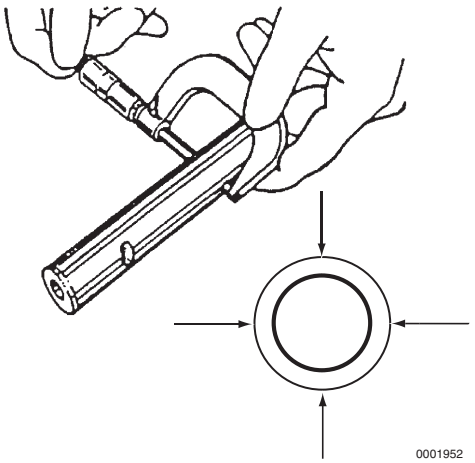

Figure 6-13

Inspection of Valve Guides

Visually inspect the valve guides for distortions, scoring or other damage.

Note: Measure valve guides while they are installed in cylinder head.

Use a telescoping gauge and micrometer to measure the inside diameter of the valve guide. Measure in three places and 90° apart **(Figure 6-14)**. Record the measurements. *See Intake / Exhaust Valve and Guide on page 6-6 for the service limit.* Replace valve guides if not within specification.

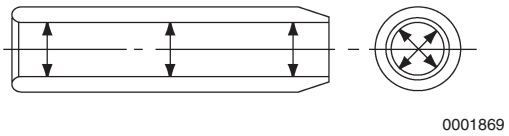

Figure 6-14

Inspection of Cylinder Head

Cylinder Head Distortion

Put the cylinder head flat and inverted (combustion side up) on the bench. Use a straightedge and feeler gauge to measure cylinder head distortion **(Figure 6-15)**. Measure diagonally and along each side. Record the measurements. *See Cylinder Head on page 6-5 for the service limit.*

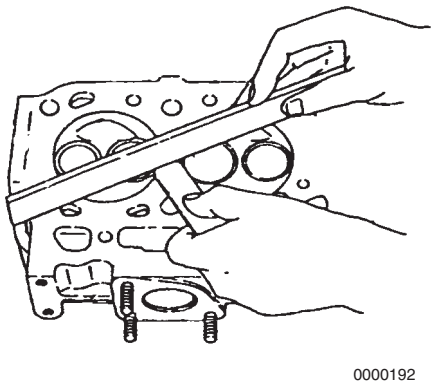

Figure 6-15

If distortion exceeds the service limit, resurface or replace the cylinder head. Remove only enough material to make the cylinder head flat, but do not remove more than 0.008 in. (0.20 mm).

Inspection of Intake and Exhaust Valves

Visually inspect the intake and exhaust valves. Replace any valves that are obviously discolored, heavily pitted or otherwise damaged.

Valve Stem Diameter

Use a micrometer to measure the valve stem diameter. Measure the valve stem near the combustion end and near the opposite end **(Figure 6-16, (1))**. Record the measurements. *See Intake / Exhaust Valve and Guide on page 6-6 for the service limit.*

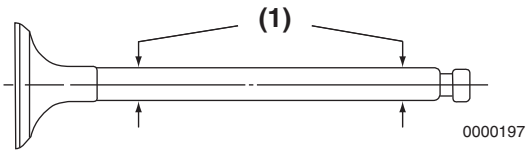

Figure 6-16

Valve Stem Bend

Place the valve stem on a flat inspection block or layout bed. Roll the valve until a gap can be observed between a portion of the valve stem and the surface of the block or bed. Use a feeler gauge to measure the gap **(Figure 6-17)**. Record the measurements. *See Intake / Exhaust Valve and Guide on page 6-6 for the service limit.*

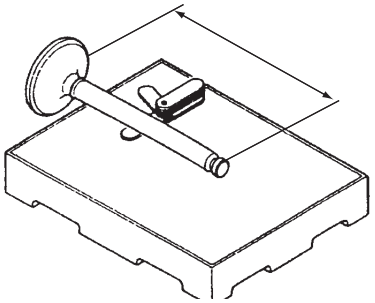

Figure 6-17

Valve Recession

Note: The valve guides must be installed to perform this check.

Insert the valves into their original locations and press them down until they are fully seated. Use a depth micrometer **(Figure 6-18)** to measure the difference between the cylinder head gasket surface and the combustion surface of each exhaust and intake valve **(Figure 6-19)**. Record the measurements. *See Cylinder Head on page 6-5 for the service limit.*

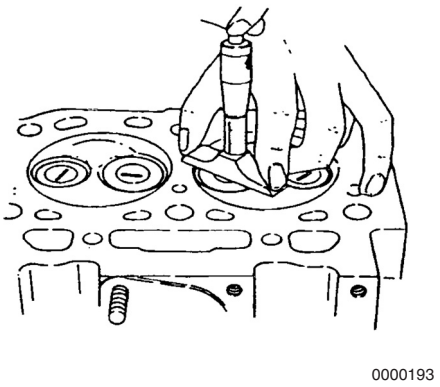

Figure 6-18

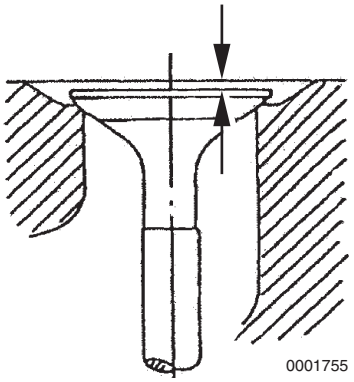

Figure 6-19

Valve Face and Valve Seat

Always check the clearance between the valve and valve guide before grinding or lapping the valve seats. *See Intake / Exhaust Valve and Guide on page 6-6 for the service limit.* If the clearance exceeds the limit, replace the valve and / or valve guide to bring the clearance within the limit.

Roughness or burrs will cause poor seating of a valve. Visually inspect the seating surfaces of each valve and valve seat to determine if lapping or grinding is needed.

Visually inspect all valve faces and valve seats for pitting, distortion, cracking, or evidence of overheating. Usually the valves and valve seats can be lapped or ground to return them to serviceable condition. Severely worn or damaged components will require replacement.

Coat the valve seat with a thin coat of bluing compound. Install valve and rotate to distribute bluing onto the valve face. The contact pattern should be approximately centered on the valve face **(Figure 6-20, (1))** and even in width.

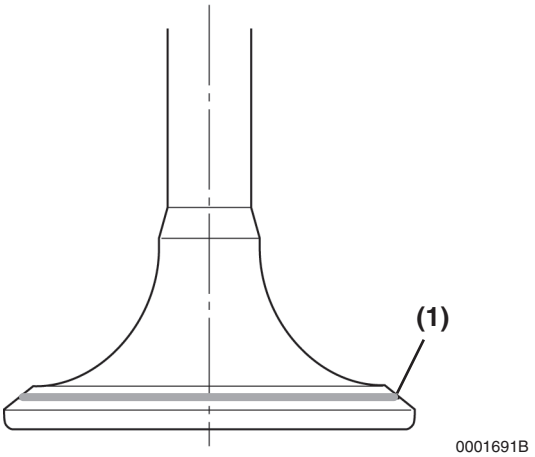

Figure 6-20

Also visually inspect the valve seat for even contact.

Light cutting can be performed by the use of a hand-operated cutter **(Figure 6-21, (3)).**

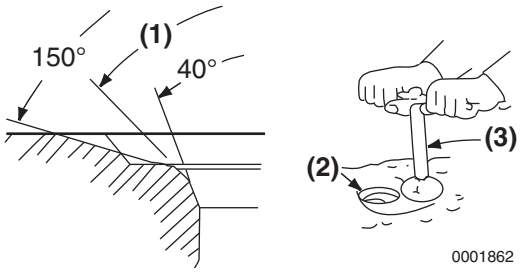

Figure 6-21

Valve seat diameter can be adjusted by top-grinding with a 150° stone to make the seat diameter smaller, and bottom-grinding using a 40° stone to make the seat diameter larger. Once the seat location has been corrected, grind and lap the seat angle **(Figure 6-21, (1))** to specification. *See Cylinder Head on page 6-5 for the service limit.*

Grind the valve face and / or valve seat only enough to return them to serviceable condition. Grinding is needed if the valve and the valve seat do not contact correctly. Check the valve recession after grinding.

If the valve or seat require grinding, lap the valve after grinding. Lap the valve face to the valve seat using a mixture of valve lapping compound and engine oil.

Be sure to thoroughly wash all parts to remove all grinding powder or compound.

Inspection of Valve Springs

Inspect the valve springs. If damage or corrosion is seen, or if measurements exceed the specified limits, replace the springs. Record the measurements.

Fractures

Check for fractures on the inside and outside portions of the springs. If the valve spring is fractured, replace the valve spring.

Corrosion

Check for corrosion of spring material caused by oxidation.

Squareness

Use a flat surface and a square to check each spring for squareness **(Figure 6-22)**. *See Valve Spring on page 6-6 for the service limit.*

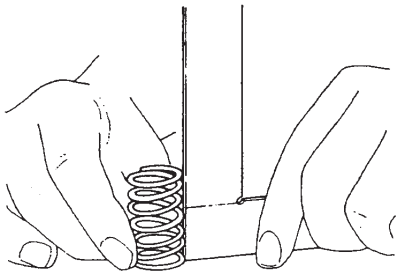

0000201

Figure 6-22

Free Length

Use a caliper to measure the length of the spring **(Figure 6-23)**. *See Valve Spring on page 6-6 for the service limit.*

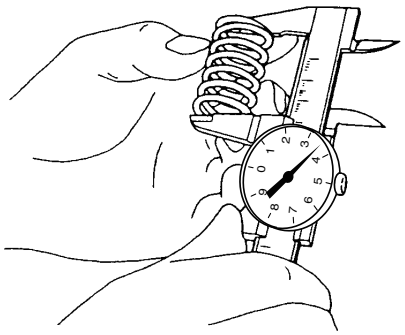

0000200

Figure 6-23

Reassembly of Cylinder Head

Use new gaskets, O-rings and seals on reassembly of cylinder head.

IMPORTANT

Liberally oil all components during assembly to prevent premature wear or damage.

Reassembly of Valve Guides

1. The valve guides are installed into the cylinder head with an extremely tight press-fit. Before installing the valve guides, place the valve guides in a freezer for at least twenty minutes. This will cause the valve guides to contract, making it easier to install the valve guides in place.
2. Immediately after removing the valve guides from the freezer, insert the valve guides **(Figure 6-24, (1))** in their proper positions.

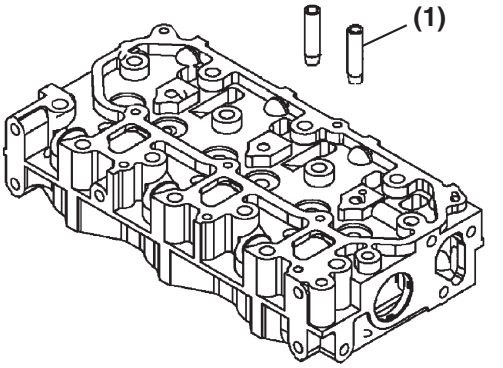

0002152

Figure 6-24

3. Finish installing the valve guides **(Figure 6-25, (1))** to the proper height **(Figure 6-25, (3))** using the valve guide installation tool **(Figure 6-25, (2))**. *See valve guide projection specification on page 6-6.*

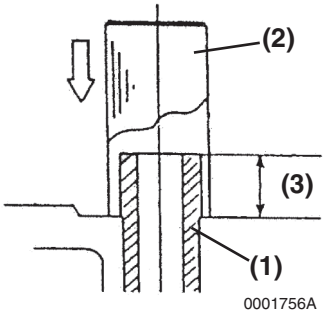

Figure 6-25

Reassembly of Intake and Exhaust Valves

IMPORTANT

Always install new valve stem seals.

*The exhaust valve stem seals are different than the intake valve stem seals and can be identified by the color the seal spring **(Figure 6-26, (4))**. Ensure they are installed in the correct locations.*

Engine Model	Marking	
	Intake	Exhaust
3TNV72	White (Seal Spring)	Black (Seal Spring)

1. Oil the lip of the valve stem seal **(Figure 6-26, (2))**. Using the valve stem seal installation tool **(Figure 6-26, (1))**, install a new valve stem seal on each of the valve guides **(Figure 6-26, (3))**.

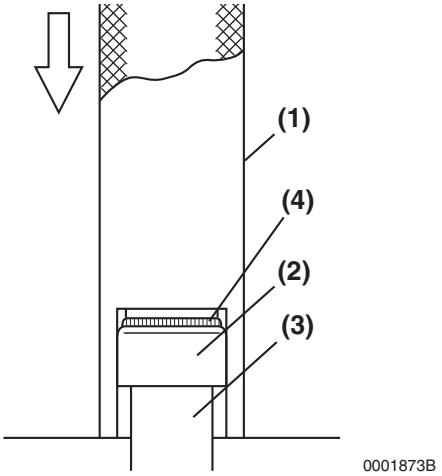

Figure 6-26

2. Measure the distance **(Figure 6-27, (1))** from the cylinder head to valve stem seal to ensure proper clearance **(Figure 6-27, (2))** between the valve guide and seal. *See valve stem seal projection specification on page 6-6.*

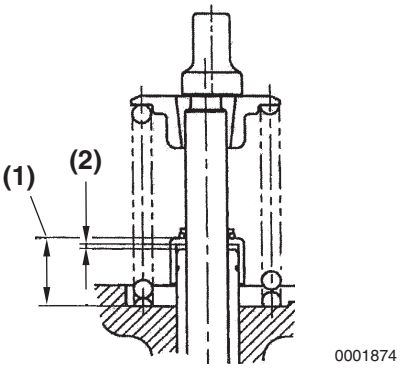

Figure 6-27

3. Put the cylinder head assembly on its exhaust port side.
4. Install all the valves **(Figure 6-28, (6))** in their proper location in the cylinder head.

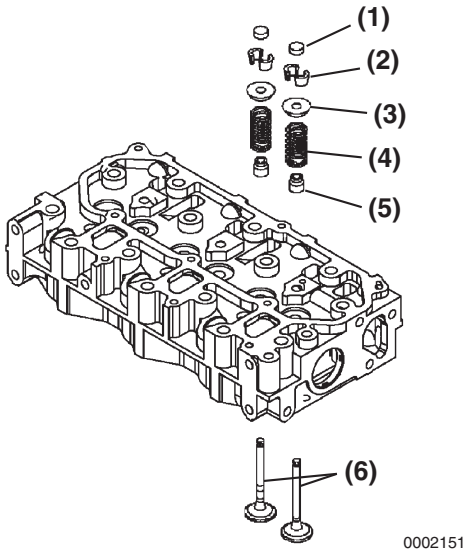

Figure 6-28

5. Put the cylinder head on the workbench with the combustion side down to install the valve springs. Reinstall the valve spring **(Figure 6-28, (4))** and spring retainer **(Figure 6-28, (5))**.
6. Using a valve spring compressor tool, compress the valve spring.
7. Insert the valve keeper **(Figure 6-28, (2))** and slowly release the tension in the valve spring. Reinstall the valve cap **(Figure 6-28, (1)).** Repeat steps on all remaining valves.

Reassembly of Cylinder Head

1. Carefully clean both the combustion surface of the cylinder head and the top surface of the cylinder block. Install a new cylinder head gasket **(Figure 6-29, (2))** on the cylinder block.
2. Position the cylinder head on the cylinder head gasket.

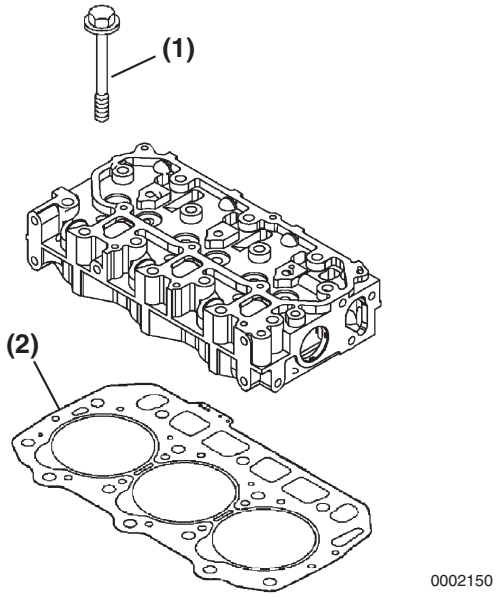

Figure 6-29

3. Lightly oil the threads of the cylinder head bolts **(Figure 6-29, (1))**. Tighten the bolts to the specified torque shown in the chart below. Tighten in the sequence shown in **Figure 6-30**. *See Torque for Bolts and Nuts on page 6-14.*

First Step	1/2 of final torque
Second Step	Final torque

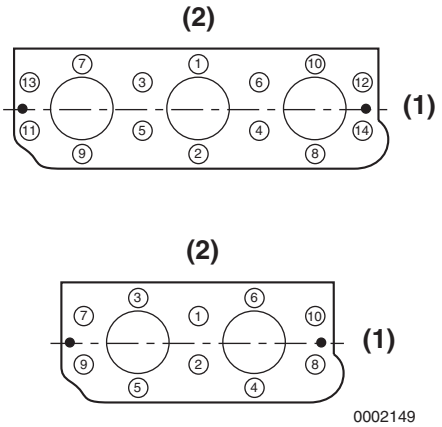

1 – Cooling Fan End
2 – Camshaft Side

Figure 6-30

4. Insert the push rods in their respective positions.

Reassembly of Rocker Arm Assembly

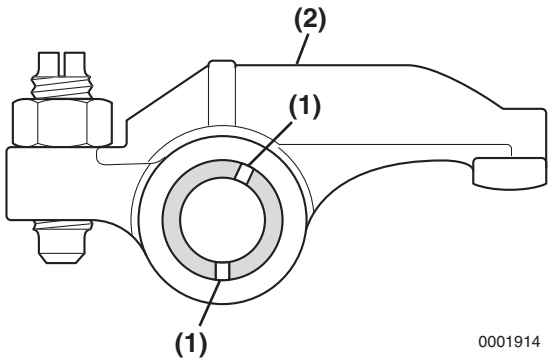

Figure 6-31

IMPORTANT

*Ensure the lubrication holes in the rocker arm shaft **(Figure 6-31, (1))** are oriented correctly with respect to the rocker arms **(Figure 6-31, (2))**.*

1. Lubricate the rocker arm shaft. Slide the rocker arm supports **(Figure 6-32, (5))**, springs **(Figure 6-32, (4))** and rocker arms **(Figure 6-32, (1))** onto the shaft.

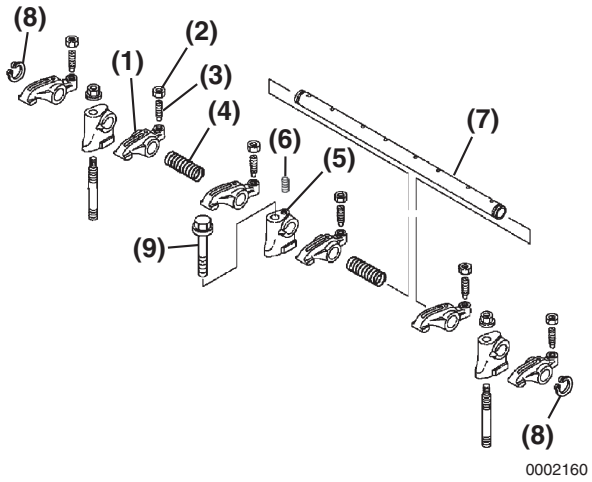

Figure 6-32

Note: The rocker arm shaft fits tightly in the rocker arm supports. Clamp the support in a padded vise. Twist and push on the rocker arm shaft to reinstall.

Note: On 3-cylinder models, the set screw is located in the center support. On 2-cylinder models, the set screw is located in the front (cooling fan) end support.

2. Align the hole in the rocker arm shaft **(Figure 6-32, (7))** and the hole in the rocker arm support **(Figure 6-32, (5))**. Reinstall the alignment set screw **(Figure 6-32, (6))**.
3. Place the rocker arm shaft assembly onto the cylinder head.
4. If removed, reinstall the valve adjusting screws **(Figure 6-32, (3))** and lock nuts **(Figure 6-32, (2))**.
5. Align the push rods with their respective rocker arms.
6. Reinstall and tighten the rocker arm shaft retaining bolts to the specified torque.
7. Tighten the rocker arm shaft alignment screw.
8. Adjust the valve clearance. *See Measuring and Adjusting Valve Clearance on page 6-34.*

Reassembly of Intake Manifold / Valve Cover

1. Reinstall the glow plugs **(Figure 6-33, (1))** and tighten to specification. Reinstall the electrical harness **(Figure 6-33, (2))**.

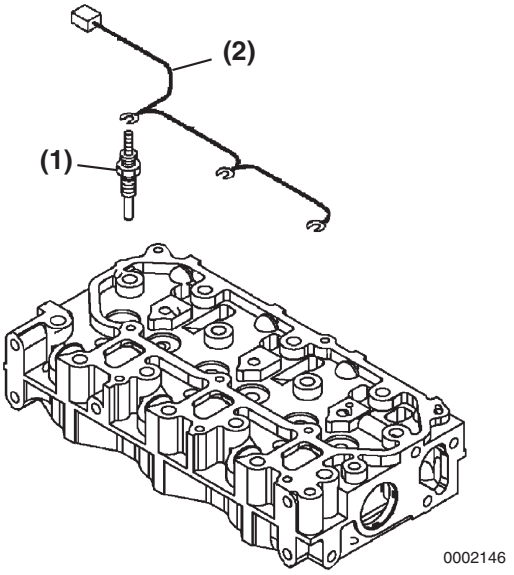

Figure 6-33

2. Lightly grease a new valve cover gasket **(Figure 6-34, (4))**. Place the gasket in the groove of the intake manifold / valve cover **(Figure 6-34, (3))**.
3. Place the valve cover on the cylinder head.
4. Reinstall and tighten bolts **(Figure 6-34, (1 and 2))** securely.

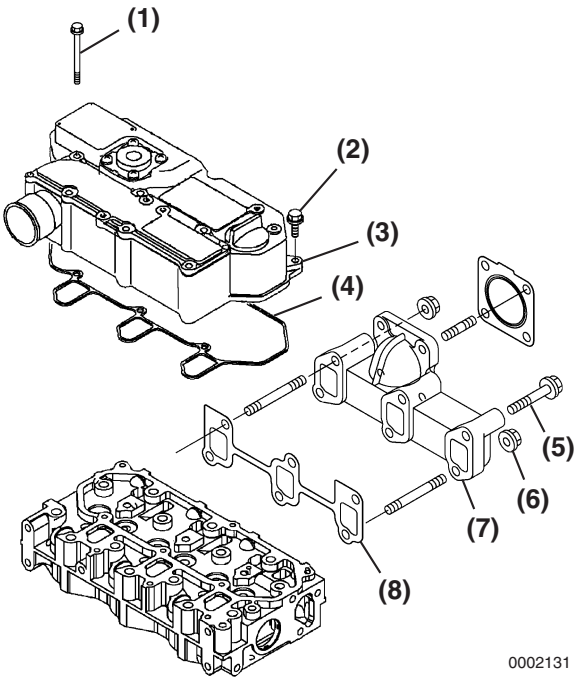

Figure 6-34

5. Reinstall the exhaust manifold using a new gasket. Tighten the bolts and nuts **(Figure 6-34, (5 and 6))** securely.
6. Reinstall the fuel injectors. *See Installation of the Fuel Injectors on page 7-29*.
7. Reinstall the high pressure and return fuel injection lines. *See Installation of the Fuel Injectors on page 7-29*.
8. Reinstall the coolant pump. *See Reassembly of Engine Coolant Pump on page 8-9.*
9. Reinstall the alternator. *See Installation of Alternator on page 11-16.*

Measuring and Adjusting Valve Clearance

Measure and adjust while the engine is cold.

Notes:

- The No. 1 piston position is on the flywheel end of the engine, opposite end of the radiator. The firing order is 1-3-2 for 3-cylinder engines and 1-2 for 2-cylinder engines.
- 3-cylinder engines fire every 240° of crankshaft rotation.
- 2-cylinder engines are an uneven firing engine. No. 2 cylinder fires 180° after No. 1. The crankshaft then rotates 540° before No. 1 cylinder fires again.
- Valve clearance of both the intake and exhaust valves can be checked with the piston for that cylinder at top dead center (TDC) of the compression stroke. When a piston is at TDC of the compression stroke, both rocker arms will be loose and the cylinder TDC mark on the flywheel will be visible in the timing port of the flywheel housing.
- If there is no valve clearance, and the piston is at TDC of the compression stroke, extreme wear or damage to the cylinder head or valves may be possible.
- If adjusting each cylinder individually, the cylinder to be adjusted first does not have to be the No. 1 cylinder. Select and adjust the cylinder where the piston is nearest to the top dead center after turning. Adjust the remaining cylinders in the order of firing by turning the crankshaft each time.
- To decrease the number of rotations required to check all cylinders of a 3-cylinder engine, other cylinders can also be checked as indicated in the chart below. 2-cylinder engines must have each cylinder adjusted when the piston is at TDC.

Example: On a 3-cylinder engine, with the No. 1 piston at TDC on the compression stroke (both valves closed), the valves indicated on the top line of the chart can be adjusted without rotating the crankshaft. To adjust the remaining two valves, rotate the crankshaft until the No. 1 piston is at TDC on the exhaust stroke (exhaust valve only open).

3-Cylinder Engines

Cylinder No.	1		2		3	
Valve	Intake	Exhaust	Intake	Exhaust	Intake	Exhaust
No. 1 Cylinder at TDC Compression	•	•	•			•
No. 1 Cylinder at TDC Exhaust				•	•	

1. Remove the intake manifold / valve cover. *See Removal of Intake Manifold / Valve Cover on page 6-22.*
2. Rotate the crankshaft clockwise as seen from the coolant pump end, to bring No. 1 piston to TDC of the compression stroke while watching the rocker arm motion and timing grid on the flywheel. (Position so both the intake and exhaust valves are closed.)
3. Insert a feeler gauge **(Figure 6-35, (1))** between rocker arm and valve cap and record the measured valve clearance. (Use the data for estimating wear.)

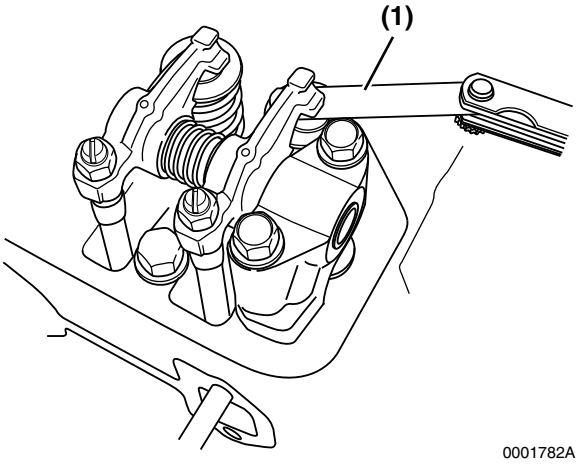

Figure 6-35

4. If adjustment is required, proceed to the next step.
5. Loosen the valve adjusting screw lock nut **(Figure 6-36, (1))** and valve adjusting screw **(Figure 6-36, (2))** on the rocker arm. Check the valve for inclination of the valve cap, entrance of dirt, or wear.

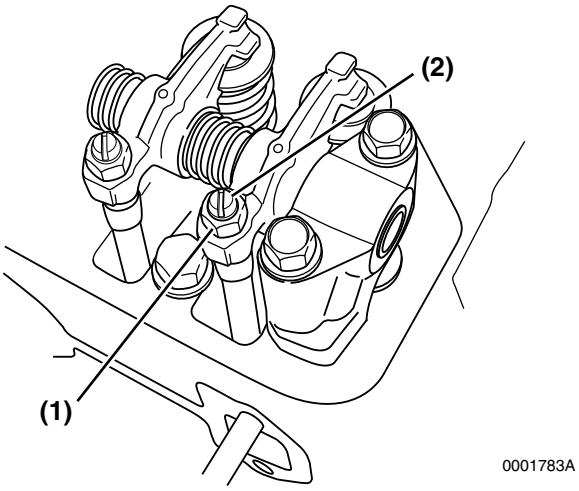

Figure 6-36

6. Insert a feeler gauge of the correct thickness **(Figure 6-37, (1))** between rocker arm and valve cap. Turn the valve adjustment screw to adjust the valve clearance so there is a slight “drag” on the feeler gauge when sliding it between the rocker arm and valve cap. Hold the adjusting screw while tightening the valve adjusting screw lock nut **(Figure 6-36, (1))**. Recheck the clearance (*see Adjustment Specifications on page 6-5*).

Note: There is a tendency for the clearance to decrease slightly when the lock nut is tightened. It is suggested that the initial clearance adjustment be made slightly on the “loose” side before tightening the lock nut.

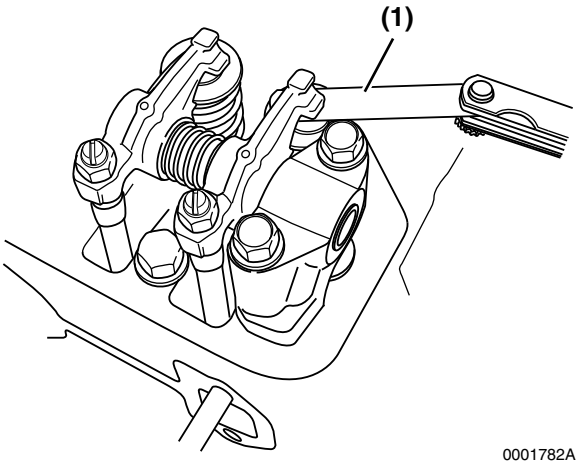

Figure 6-37

7. Apply oil to the contact surface between adjusting screw and push rod.
8. Rotate the crankshaft and measure the next cylinder. Continue until all valves are adjusted.

CYLINDER BLOCK

Crankshaft and Camshaft Components

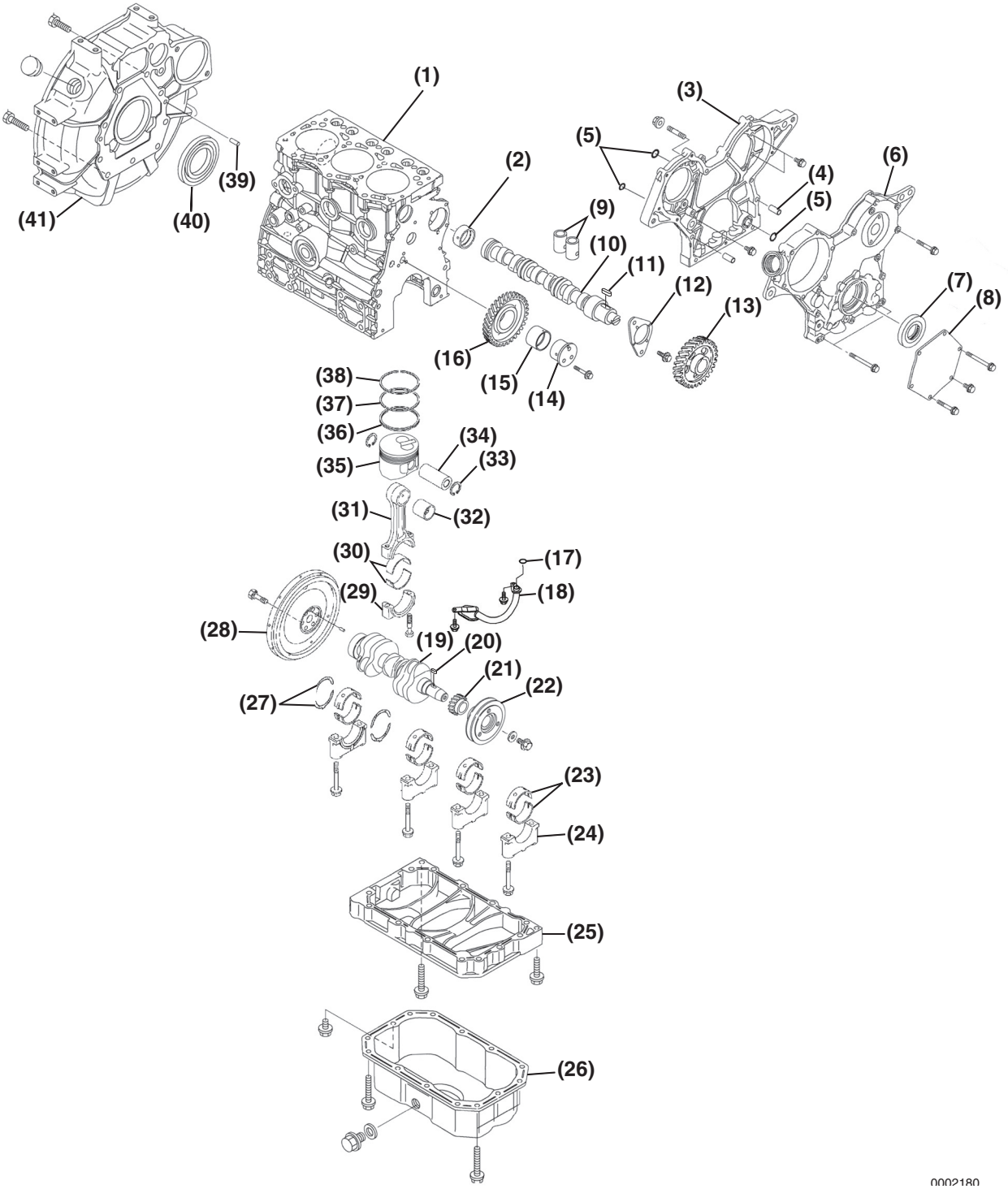

Figure 6-38

1 – Cylinder Block
2 – Camshaft Bushing
3 – Gear Case
4 – Dowel (2 used)
5 – O-Ring
6 – Gear Case Cover
7 – Front Crankshaft Seal
8 – Fuel Injection Pump Gear Cover
9 – Tappets
10 – Camshaft
11 – Camshaft Gear Key
12 – Camshaft End Plate
13 – Camshaft Gear
14 – Idler Gear Shaft
15 – Idler Gear Bushing
16 – Idler Gear
17 – Oil Pickup O-Ring
18 – Oil Pickup
19 – Crankshaft
20 – Crankshaft Gear Key
21 – Crankshaft Gear
22 – Crankshaft Pulley
23 – Main Bearing Inserts
24 – Main Bearing Cap
25 – Crankcase Extension
26 – Oil Pan
27 – Thrust Bearings
28 – Flywheel
29 – Connecting Rod Cap
30 – Connecting Rod Bearing Inserts
31 – Connecting Rod
32 – Wrist Pin Bushing
33 – Circlip
34 – Wrist Pin
35 – Piston
36 – Oil Ring
37 – Second Compression Ring
38 – Top Compression Ring
39 – Dowel (2 used)
40 – Crankshaft Rear Seal
41 – Flywheel Housing

Disassembly of Cylinder Block Components

Prepare a clean, flat working surface on a workbench large enough to accommodate the engine components. Discard all used gaskets, O-rings and seals. Use new gaskets, O-rings and seals for reassembly of engine.

CAUTION

Identify all parts and their location using an appropriate method. It is important that all parts are returned to the same position during the reassembly process.

0000080en

IMPORTANT

Mark all valve train components so they can be installed in their original locations.

Note: Record all measurements taken during disassembly.

If the engine will be completely disassembled, the following preliminary steps should be performed:

1. Disconnect the battery cables at the battery. Always disconnect the negative (-) cable first.
2. Remove the throttle cable, electrical connections, intake and exhaust system connections, and fuel supply lines from the engine.
3. Remove the alternator. *See Removal of Alternator on page 11-12.*
4. Drain the engine coolant from the radiator and cylinder block. *See Drain, Flush and Refill Cooling System with New Coolant on page 5-33*. Remove the cooling system components from the engine.

⚠ CAUTION

Be sure to secure the engine solidly to prevent injury or damage to parts due to the engine falling during work on the engine.

0000009en

5. Remove the engine from the machine. Mount the engine to a suitable engine repair stand having adequate weight capacity.
6. Clean the engine by washing with solvent, air or steam cleaning. Carefully operate to prevent any foreign matter or fluids from entering the engine, fuel system, or electrical components remaining on the engine.
7. Drain the engine oil into a suitable container. Remove oil filter.
8. Remove the cylinder head. *See Disassembly of Cylinder Head on page 6-21.*
9. Remove the fuel injection pump from the gear case only if it must be sent out for repair, or will interfere with other procedures such as “hot tank” cleaning. *See Removal of Fuel Injection Pump on page 7-13*.
10. Remove the starter motor. *See Removal of Starter Motor on page 10-10.*

Disassembly of Camshaft and Timing Components

Discard all gaskets, O-rings and seals. Use new gaskets, O-rings and seals on reassembly of camshaft and timing components.

Removal of Timing Gear Case Cover

1. Remove the bolt and washer retaining the crankshaft pulley.

IMPORTANT

Use care not to damage the threads in the end of the crankshaft when removing the crankshaft pulley.

2. Remove the crankshaft pulley with a gear puller.
3. Remove the bolts that retain the gear case cover to the cylinder block and oil pan.
4. Remove the gear case cover **(Figure 6-39, (1))**.
5. Remove the dowel pins **(Figure 6-39, (3))** and O-ring **(Figure 6-39, (2))**.

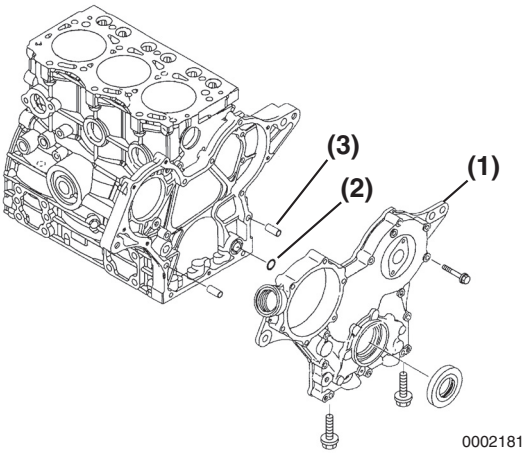

Figure 6-39

Checking Timing Gear Backlash

Prior to removing the timing gears, measure the gear backlash and determine the gear wear.

Note: Check the backlash between each pair of mating gears. If not within specification, replace both mating gears. Do not allow the gear being checked to move axially as excess end play could cause a false reading. *See Timing Gear Backlash on page 6-8 for service limits.*

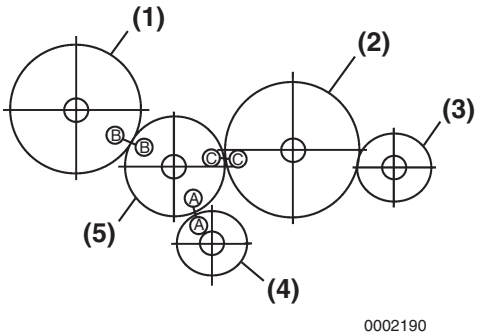

1 – Fuel Injection Pump Drive Gear
2 – Camshaft Drive Gear
3 – Auxiliary Drive Gear (Optional)
4 – Crankshaft Drive Gear
5 – Idler Gear

Figure 6-40

Measuring Idler Gear-to-Crankshaft Gear Backlash

1. Install a dial indicator as shown in **Figure 6-41**.

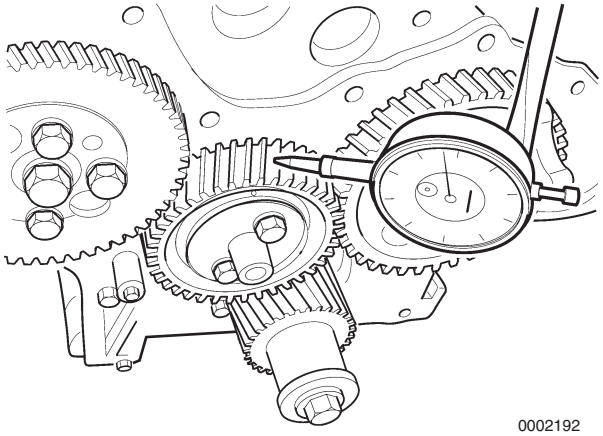

Figure 6-41

2. Rotate the idler gear back and forth to check idler gear-to-crankshaft gear backlash. Total indicator reading is backlash. Record the measurement.

Measuring Idler Gear-to-Camshaft Gear Backlash

1. Drive a small wooden wedge between the crankshaft gear and idler gear to prevent the idler gear from rotating.
2. Install a dial indicator to read camshaft gear backlash. Rotate camshaft drive gear against idler gear to measure backlash. Record the measurement.
3. Check the idler gear-to-fuel injection pump drive gear backlash in the same manner as the camshaft drive gear. Record the measurement.

Removal of Timing Gears

1. Remove the bolts from the idler gear shaft **(Figure 6-42, (1))**. Remove the idler gear shaft, idler gear **(Figure 6-42, (3))** and bushing **(Figure 6-42, (2))**.

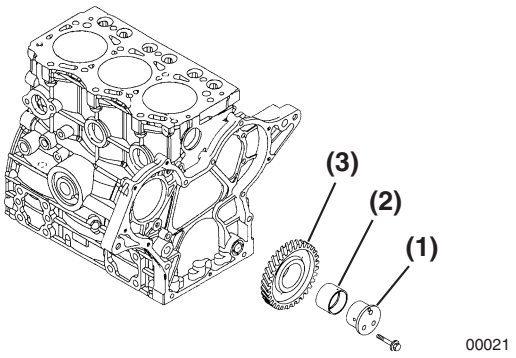

Figure 6-42

2. Do not remove the crankshaft gear unless it is damaged and requires replacement. If the gear must be removed, remove it with a gear puller.
3. Removal of the camshaft gear requires the camshaft be removed with a press. Do not remove the camshaft gear unless it or the camshaft is damaged and requires replacement. *See Removal of Camshaft on page 6-41*.

CAUTION

Do not loosen or remove the four bolts retaining the fuel injection pump drive gear to the fuel injection pump hub. Do not disassemble the fuel injection pump drive gear from the hub. Correct fuel injection timing will be very difficult or impossible to achieve.

0000031en

4. Do not remove the fuel injection pump drive gear unless absolutely necessary due to damage to the gear or pump. Do not loosen or remove the four bolts **(Figure 6-43, (3))** retaining pump drive gear to the hub. Only remove the nut **(Figure 6-43, (1))** and washer **(Figure 6-43, (2))**, leaving the hub attached to the gear. Remove the pump drive gear and hub as an assembly using a gear puller.

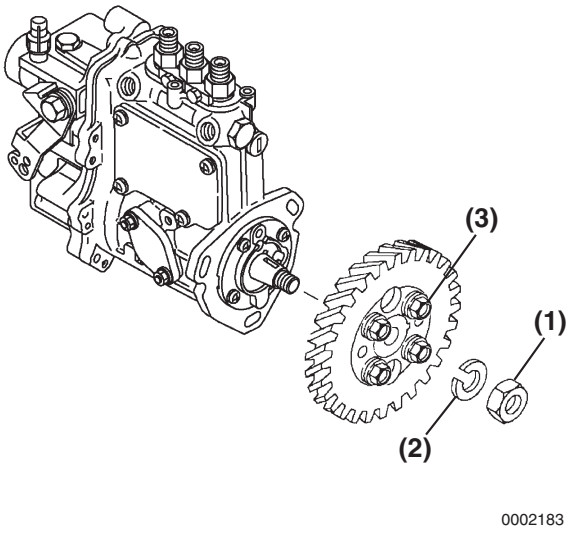

Figure 6-43

CAUTION

Do not loosen or remove the four bolts retaining the fuel injection pump drive gear to the fuel injection pump hub. Do not disassemble the fuel injection pump drive gear from the hub. Correct fuel injection timing will be very difficult or impossible to achieve.

0000031en

Removal of Oil Pan

1. Invert the engine (oil pan up) on the engine stand.
2. Remove the oil pan **(Figure 6-44, (2))**.
3. Remove the crankcase extension **(Figure 6-44, (1))** if equipped.

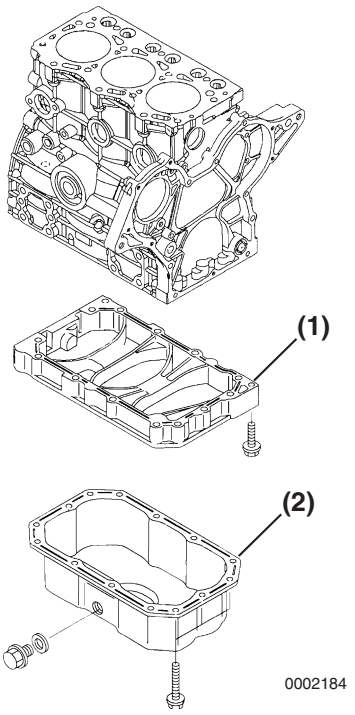

Figure 6-44

4. Remove the oil pickup tube **(Figure 6-45, (1))** and O-ring **(Figure 6-45, (2))**.

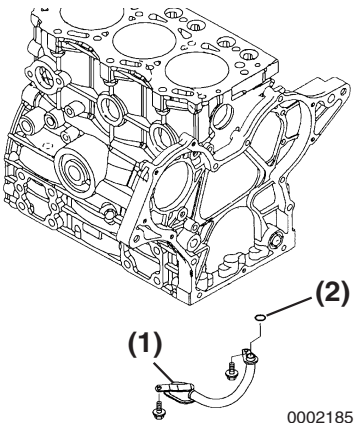

Figure 6-45

Removal of Camshaft

1. Before removing the camshaft, check the camshaft end play.
   - **Method A:** Install a dial indicator **(Figure 6-46, (1))** on the cylinder block. Move the camshaft and gear **(Figure 6-46, (2))** in and out to measure the end play. Record the measurement. *See Camshaft on page 6-7 for the service limit.*

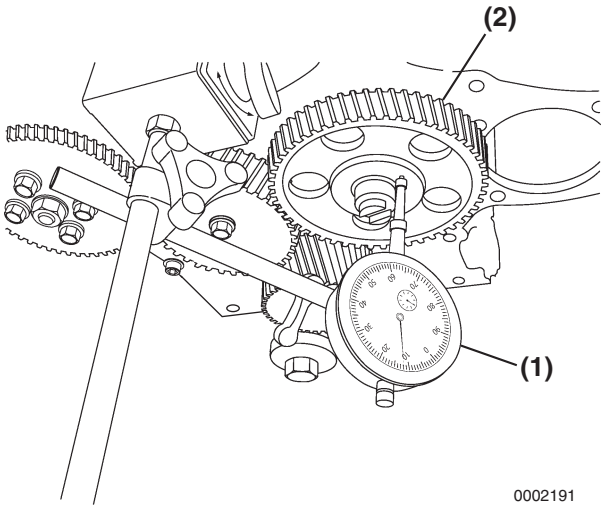

Figure 6-46

   - **Method B:** Use a feeler gauge to measure the clearance between the thrust plate **(Figure 6-47, (1))** and front camshaft bearing **(Figure 6-47, (2))**. Record the measurement. *See Thrust Bearing on page 6-9 for the service limit.*

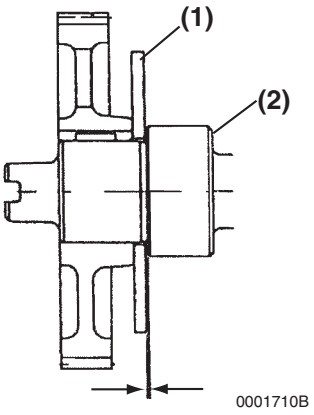

Figure 6-47

2. Remove two bolts **(Figure 6-48, (3))** retaining the camshaft thrust plate **(Figure 6-48, (1))**.

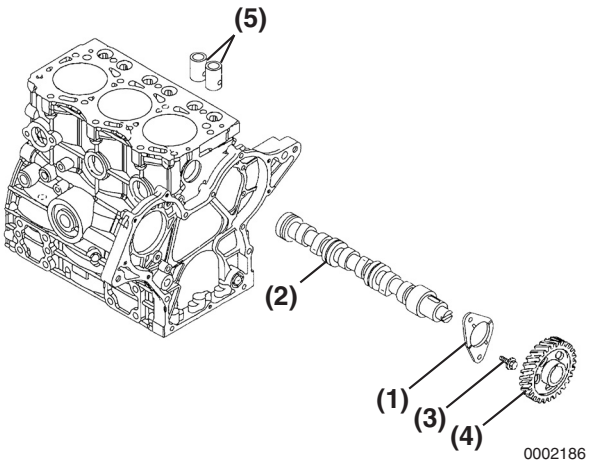

Figure 6-48

3. Extract the tappets **(Figure 6-48, (5))** through the top of the cylinder block. Mark the tappets so they can be reinstalled in the same location.
4. Slowly pull the camshaft **(Figure 6-48, (2))** assembly out of the engine being careful not to damage the front camshaft bushing.
5. Remove the camshaft gear **(Figure 6-48, (4))** only if the gear or camshaft require replacement. Use a knife-edge puller and a press to remove the gear. The gear is a shrink-fit and will need to be heated to 356° - 392°F (180° - 200°C) to remove.

Removal of Gear Case

Note: The camshaft must be removed before the gear case can be removed. *See Removal of Camshaft on page 6-41.*

1. Remove bolts **(Figure 6-49, (4))**.

Note: It is not necessary to remove the fuel injection pump from the gear case to remove the gear case. If the fuel injection pump does not need to be repaired, leave it mounted to the timing gear case. *See Removal of Fuel Injection Pump on page 7-13.*

2. Remove the gear case **(Figure 6-49, (1))** from the cylinder block.
3. Inspect and measure the camshaft bushing. *See Camshaft on page 6-7 for service limits*. If damaged or worn beyond service limits, remove the camshaft bushing **(Figure 6-49, (3))**.
4. Remove O-rings **(Figure 6-49, (2))**.

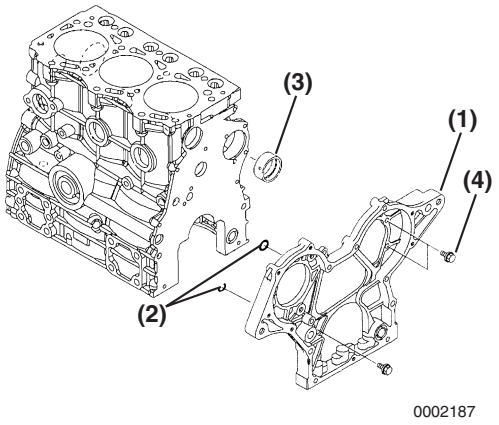

Figure 6-49

Disassembly of Crankshaft and Piston Components

Removal of Pistons

CAUTION

Keep the piston pin parts, piston assemblies, and connecting rod assemblies together to be returned to the same position during the reassembly process. Label the parts using an appropriate method.

0000088en

IMPORTANT

Engines with high operating hours may have a ridge near the top of the cylinders that will catch the piston rings and make it impossible to remove the pistons. Use a suitable ridge reamer to remove ridges and carbon prior to removing pistons.

Note: Pistons can fall from cylinder block if engine is inverted. Rotate the engine so the connecting rods are horizontal before removing the connecting rod caps.

1. Using a feeler gauge, measure the connecting rod side clearance **(Figure 6-50)**. *See Connecting Rod on page 6-12 for the standard limit*. If the measurement is out of specification, replace the crankshaft, connecting rod, or both.

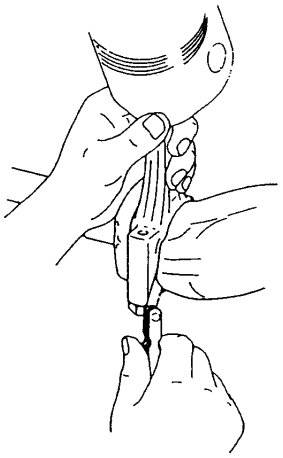

0000219

Figure 6-50

IMPORTANT

Mark the connecting rod caps and connecting rods so the caps and connecting rods stay together.

2. Remove the bearing cap. Do not remove the bearing inserts at this time.
3. Wipe oil from the bearing insert and crankshaft journal surfaces.
4. Place a piece of PLASTIGAGE® **(Figure 6-51, (1))** along the full width of the bearing insert.

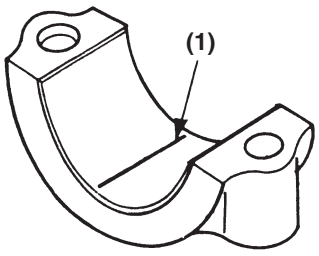

0001898

Figure 6-51

IMPORTANT

Do not rotate crankshaft when using PLASTIGAGE. A false reading may result.

5. Reinstall the bearing cap and tighten to specification. *See Special Torque Chart on page 6-14.*
6. Remove the bearing cap.

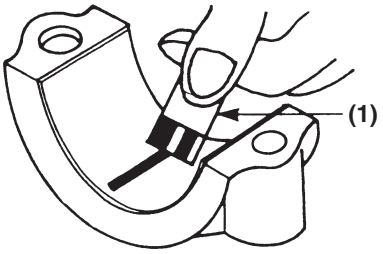

0001899

Figure 6-52

7. Compare the width of the flattened PLASTIGAGE **(Figure 6-52, (1))** to the graduation marks on the package. The mark that most closely matches the width of the flattened PLASTIGAGE will indicate the bearing oil clearance. Record the measurements. *See Crankshaft on page 6-8.*
8. Repeat with the remaining connecting rods.

IMPORTANT

Do not allow the connecting rod to contact the crankshaft journal during piston removal. Damage to the bearing journal may result.

9. Use a wooden dowel against the connecting rod and tap the piston / connecting rod assembly out of the cylinder.
10. Mark the cylinder number on the piston and connecting rod.

11. Remove the bearing inserts **(Figure 6-53, (2))**.
12. Remove the compression rings **(Figure 6-53, (3))** from the piston using a piston ring expander.
13. Remove the oil ring **(Figure 6-53, (4))** from the piston using a piston ring expander.

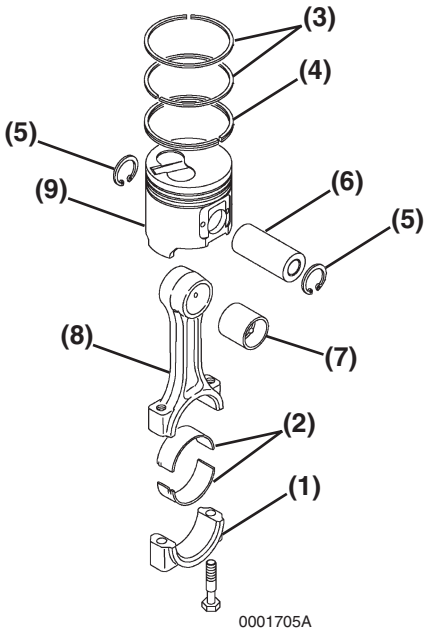

Figure 6-53

14. Remove the circlips **(Figure 6-53, (5))** from the wrist pin.
15. Remove the wrist pin **(Figure 6-53, (6))** and connecting rod **(Figure 6-53, (8))** from the piston **(Figure 6-53, (9))**.
16. Repeat steps until all pistons are removed and dissembled.

Removal of Crankshaft

1. Remove the flywheel **(Figure 6-54, (1))** from the crankshaft.
2. Remove the bolts **(Figure 6-54, (2))** from the flywheel housing assembly. Remove the flywheel housing from the engine.

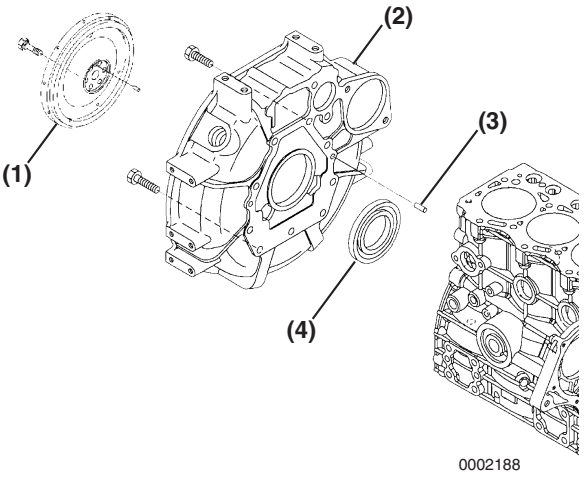

Figure 6-54

3. Before removing the main bearing caps, measure the crankshaft end play. Use either of the following two methods:
   - **Method A:** Install a dial gauge **(Figure 6-55, (1))** on the cylinder block. Move the crankshaft **(Figure 6-55, (2))** in and out to measure the end play. Record the measurement.

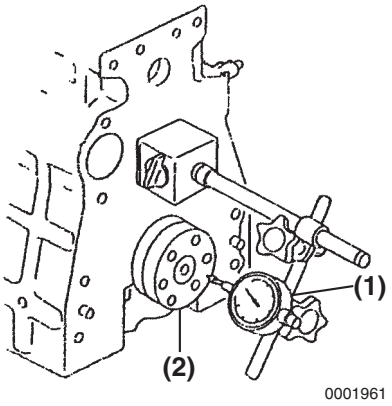

Figure 6-55

- **Method B:** Use a feeler gauge to measure the clearance **(Figure 6-56, (3))** between the thrust bearing **(Figure 6-56, (1))** and crankshaft **(Figure 6-56, (2))**. Record the measurement. *See Thrust Bearing on page 6-9 for the service limit.*

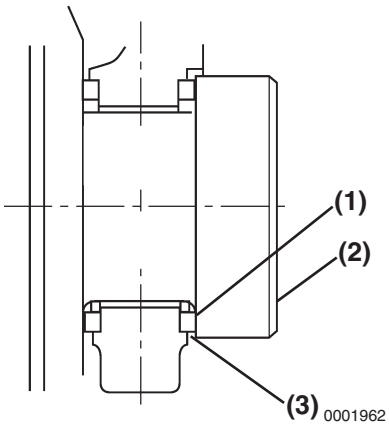

Figure 6-56

4. Remove the bearing cap. Do not remove the bearing inserts at this time.
5. Wipe oil from the bearing insert and crankshaft journal surfaces.
6. Place a piece of PLASTIGAGE® **(Figure 6-57, (1))** along the full width of the bearing insert.

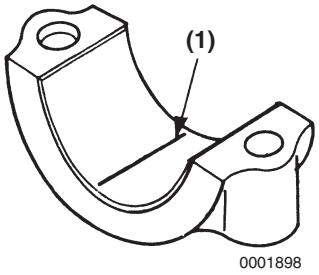

Figure 6-57

IMPORTANT

Do not rotate crankshaft when using PLASTIGAGE. A false reading may result.

7. Reinstall the bearing cap and tighten to specification. *See on page 6-14.*
8. Remove the bearing cap.

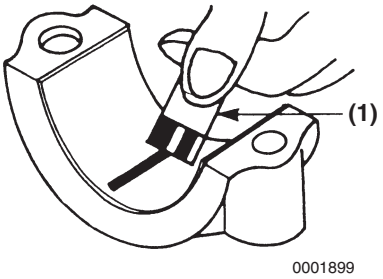

Figure 6-58

9. Compare the width of the flattened PLASTIGAGE **(Figure 6-58, (1))** to the graduation marks on the package. The mark that most closely matches the width of the flattened PLASTIGAGE will indicate the bearing oil clearance. Record the measurement. *See Crankshaft on page 6-8 for clearance specifications.*
10. Repeat with the remaining main bearings.

Note: Be sure to note the markings on the main bearing caps, or make marks so they can be reinstalled in the same order as they were removed. The “arrows” on the main bearing caps point to the flywheel end of the engine.

11. Remove the crankshaft from the engine.
12. Remove the bearing inserts **(Figure 6-59, (1))** and thrust bearings **(Figure 6-59, (2))**.

Note: Do not remove the crankshaft gear unless the gear or crankshaft are damaged and require replacement.

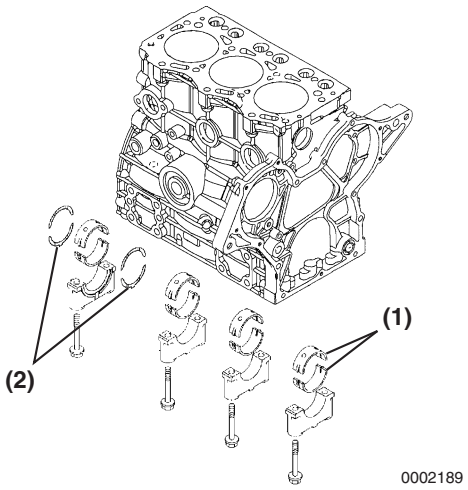

Figure 6-59

13. If necessary, remove the crankshaft gear **(Figure 6-60, (1))** and key **(Figure 6-60, (2))**. If using a gear puller, be careful not to damage the threads in the end of the crankshaft.

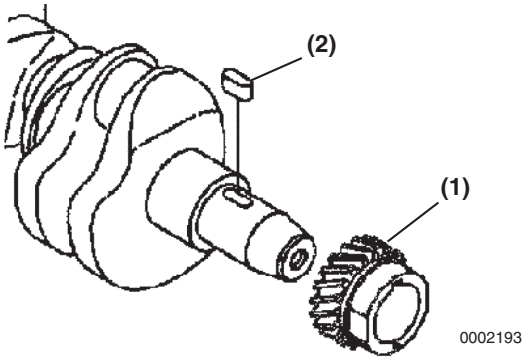

Figure 6-60

Inspection of Crankshaft and Camshaft Components

⚠ WARNING



FUME / BURN HAZARD!

- **Always read and follow safety related precautions found on containers of hazardous substances like parts cleaners, primers, sealants and sealant removers.**
- **Failure to comply could result in death or serious injury.**

0000014en

Thoroughly clean all components using a brush and appropriate solvent. Each part must be free of carbon, gasket material, metal filings and other debris.

Note: Record all measurements taken during inspection.

Replacement of Crankshaft Oil Seals

1. Remove the seal **(Figure 6-61, (2))** from the gear case cover **(Figure 6-61, (1))**.
2. Apply a continuous bead of ThreeBond Liquid Gasket No. 1212, Yanmar Part No. 977770-01212 to the outside diameter of a new oil seal **(Figure 6-61, (2)).**
3. Install a new seal in the gear case cover with the lip facing in away from the crankshaft pulley. Apply lithium grease to the lip of the seal.

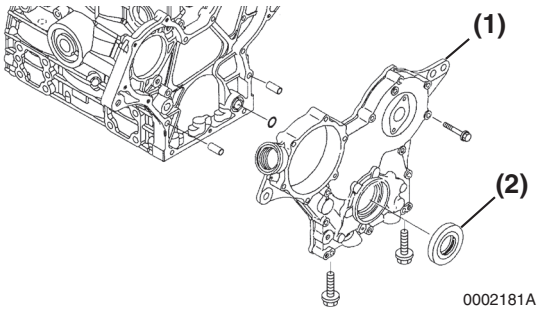

Figure 6-61

4. Remove the rear oil seal **(Figure 6-62, (1))** from the flywheel housing **(Figure 6-62, (2))**.

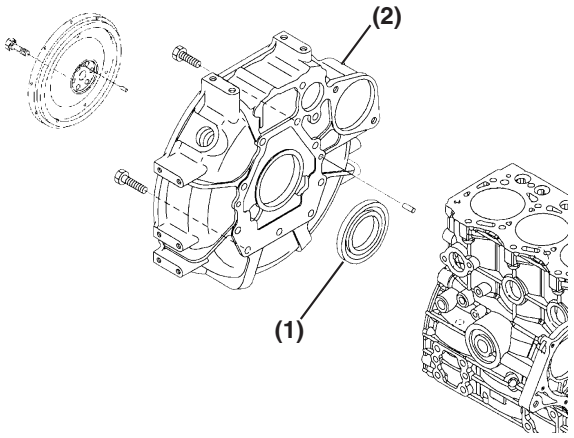

Figure 6-62

5. Apply a continuous bead of ThreeBond Liquid Gasket No. 1212, Yanmar Part No. 977770-01212 to the outside diameter of a new oil seal **(Figure 6-62, (1))**.
6. Install a new seal in the flywheel housing **(Figure 6-62, (2))** with the lip facing in away from the flywheel. Apply lithium grease to the lip of the seal.

Crankshaft Bearing Oil Clearance

Oil clearance should be checked during disassembly to determine the extent of wear, and during assembly to ensure long engine life. The same procedure is done for both connecting rods and main bearings. *See Removal of Pistons on page 6-42* or *Removal of Crankshaft on page 6-44 for specific information*.

Inspection of Cylinder Block

1. Ensure that oil passages are clear and unobstructed.
2. Check for discoloration or evidence of cracks. If a fracture is suspected, use the color check method or the MAGNAFLUX® method to determine if the cylinder block is fractured.
3. Measure cylinders for roundness, taper, and inspect for evidence of scoring. Consider honing, re-boring or replacing the cylinder block if the measurements are not within specification.
   - Take measurements at three places **(Figure 6-63) (a, b, and c)**, and in two directions **(d and e)** in each cylinder. Collect and record the measurements. *See Cylinder Block on page 6-13 for specifications.*

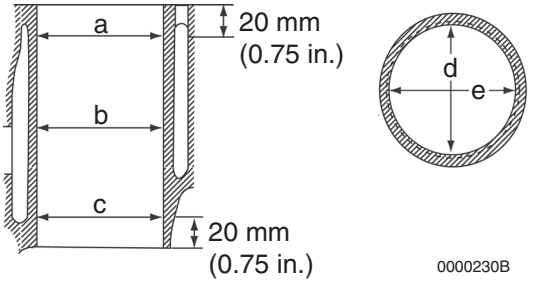

Figure 6-63

Roundness

Roundness can be calculated by subtracting the smaller measured value from the larger measured value of **(d or e)** at each measuring location **(a, b, and c)**.

Taper

Taper can be calculated by subtracting the minimum measured value from the maximum measured value of locations **(a, b, and c)**. Calculate along both the **(d)** axis and **(e)** axis and use the larger of the two calculations as the value to compare to the specifications.

Inspection of Pistons, Piston Rings and Wrist Pin

Notes:

- On an engine with low hours, the pistons, piston rings may be reused if they are found to be within specifications. The pistons and piston rings must be reinstalled in the same cylinders from which they were originally removed.
- On an engine with high hours, the pistons rings should be replaced and the cylinder honed *(See Honing and Boring on page 6-53)* or replaced. The piston should be replaced as necessary.

1. Clean piston ring grooves using a piston ring groove cleaning tool. Follow manufacturer's instructions for correct operation.
2. Wash the pistons in an appropriate solvent using a soft brush.
3. Visually inspect each piston for cracks. Pay particular attention to the ring lands between the piston ring grooves.
4. Measure the diameter of the piston skirt at 90° to the wrist pin bore as shown **(Figure 6-64)**. Measurements must be taken at a specified distance **(Figure 6-64, (1))** from the bottom of the piston, based on engine model. Record the measurements. *See Piston on page 6-10 for specifications.*

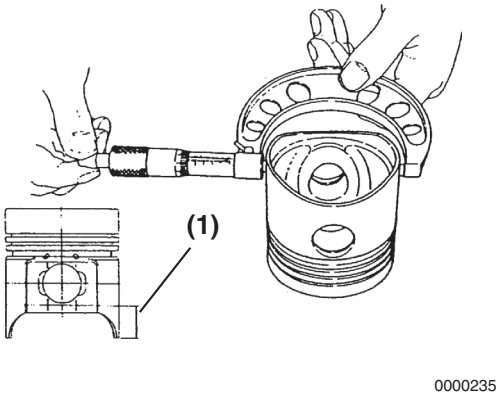

Figure 6-64

5. Subtract the piston measurement from the greatest measurement acquired during cylinder inspection *(see Inspection of Cylinder Block on page 6-47)* to obtain piston-to-cylinder clearance. Record the measurements. *See Piston on page 6-10 for specifications.*
6. Measure the diameter of the wrist pin bore on both sides of the piston **(Figure 6-65)**. *See Piston on page 6-10 for specifications.* Record the measurements.

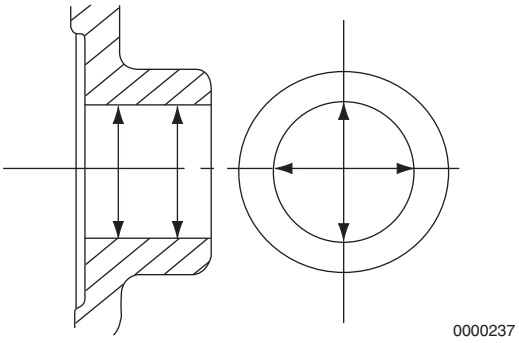

Figure 6-65

7. Measure the outside diameter of the wrist pin in three places and at 90° **(Figure 6-66)**. *See Piston on page 6-10 for specifications.* Record the measurements.

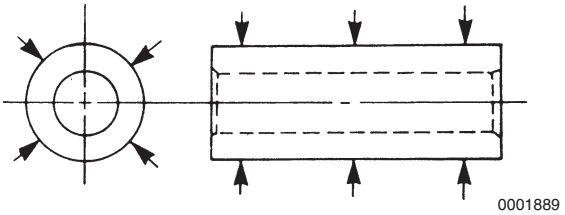

Figure 6-66

8. Using a micrometer, measure the thickness of each piston ring. *See Piston Ring on page 6-11 for specifications.* Record the measurements.

   Notes:

   - On an engine with low hours, the pistons, piston rings and cylinders may be reused if they are found to be within specifications.

- On an engine with high hours, the pistons rings should be replaced and the cylinder honed *(See Honing and Boring on page 6-53)* or replaced. The piston should be replaced as necessary.

9. Place each compression piston ring in the groove as shown **(Figure 6-67)**. Use a feeler gauge to measure the clearance between the piston ring and the piston ring land. Record the measurements. *See Piston Ring on page 6-11 for specifications.* Replace the piston if not within specification.

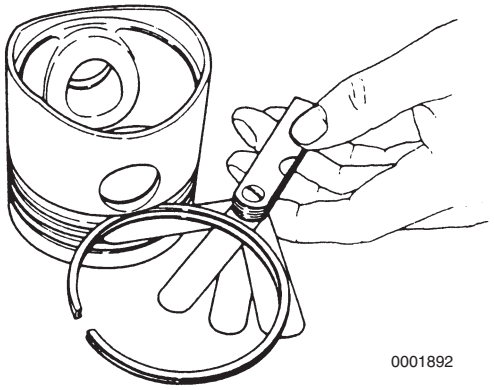

Figure 6-67

10. To measure piston ring end gap, insert each compression piston ring **(Figure 6-68, (1))**, one at a time, into the cylinder. Use a piston with the piston rings removed to slide the ring into the cylinder bore until it is approximately 1.18 in. (30 mm) **(Figure 6-68, (2))** from the bottom of the bore. Remove the piston. Measure the end gap **(Figure 6-68, (3))** of each piston ring. Record the measurements. *See Piston Ring on page 6-11 for specifications.*

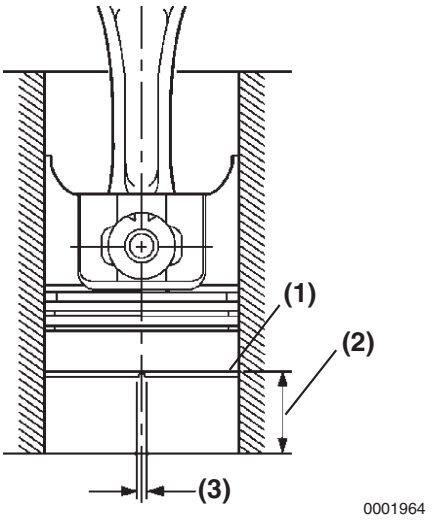

Figure 6-68

Note: Always check the piston ring end gap when installing new piston rings. *See Piston Ring on page 6-11 for specifications.* Use a piston ring end gap filing tool to adjust the piston ring end gap on new piston rings.

11. Repeat the above steps for each cylinder and piston assembly.

Inspection of Connecting Rod

1. Measure the wrist pin bushing bore using a bore gauge **(Figure 6-69, (1))**. Replace the bushing if not within specifications. If the bushing has been removed, measure the inside diameter of the connecting rod small end **(Figure 6-69, (2))**. Record the measurements. *See Connecting Rod on page 6-12 for specifications.*

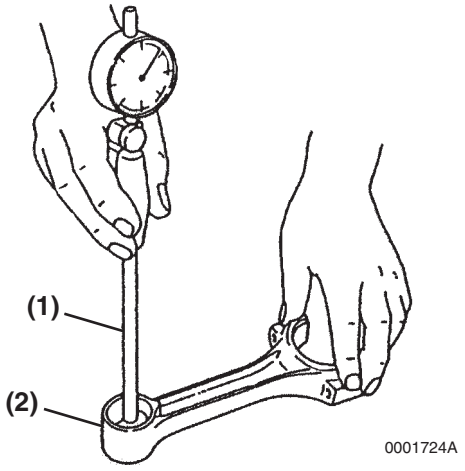

Figure 6-69

2. Measure the connecting rod twist **(Figure 6-70, (1))** and bend **(Figure 6-70, (2))** using a connecting rod alignment tool **(Figure 6-71)**. Record the measurements. *See Connecting Rod on page 6-12 for specifications.*

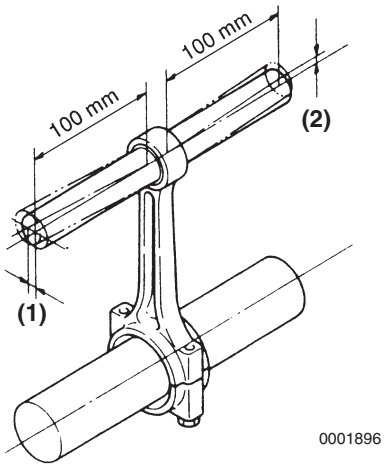

Figure 6-70

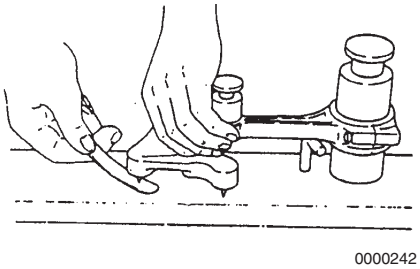

Figure 6-71

3. Place the connecting rod bearing inserts into the connecting rod and connecting rod cap. Install the rod cap and tighten the bolts to the specified torque.
4. Measure the inside diameter. Record the measurements. *See Crankshaft on page 6-8 for specifications.*

Inspection of Tappets

1. Inspect the tappet contact surfaces for abnormal wear **(Figure 6-72, (1))**. Normal wear will be even as shown in **(Figure 6-72, (2)).** Slight surface defects can be corrected using an oilstone.

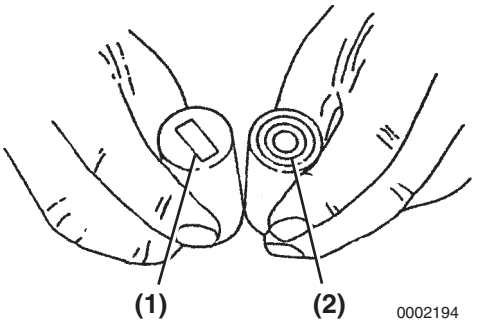

Figure 6-72

2. Measure the outside diameter of the tappet stem **(Figure 6-73, (1))**. Record the measurements. *See Tappet on page 6-12 for the service limit.*

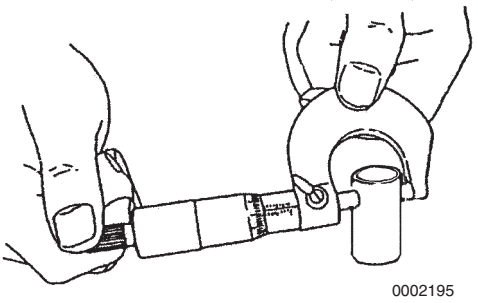

Figure 6-73

3. Measure the tappet bores in the cylinder block. Record the measurements. *See Tappet on page 6-12 for the service limit.*

Inspection of Crankshaft

1. Put the crankshaft end journals **(Figure 6-74, (4))** on V-blocks.
2. Place a dial indicator **(Figure 6-74, (3))** on a center main bearing surface.

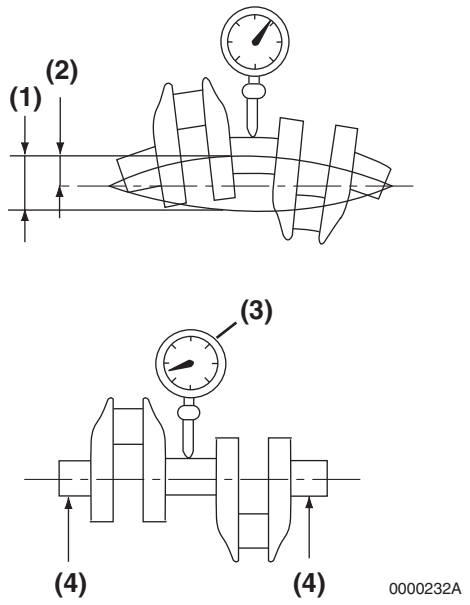

Figure 6-74

3. Rotate the crankshaft and observe runout. Record the measurements. *See Crankshaft on page 6-8 for specifications.*
4. Use the color check method or MAGNAFLUX to inspect the crankshaft for cracks. Replace the crankshaft if evidence of fractures is found.
5. Measure the outside diameter of each crankpin **(Figure 6-75, (2))** and main bearing journal **(Figure 6-75, (1))**. *See Crankshaft on page 6-8 for specifications.* Take measurements at several places around each bearing surface. If not within specification, grind the journals and install undersize bearings, or replace the crankshaft. Record the measurements.

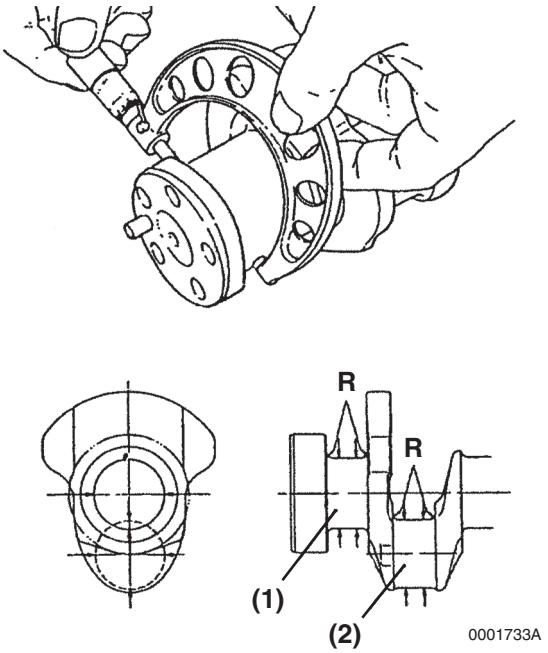

Figure 6-75

Reconditioning the Crankshaft

If any of the crankshaft journals do not meet the specifications, it may be possible to grind any or all of them to an undersize. The connecting rod bearings, main bearings, and thrust bearing inserts are available as 0.010 in. (0.25 mm) undersize. If the journals are ground undersize, the following finishing standards **(Figure 6-76)** must be adhered to:

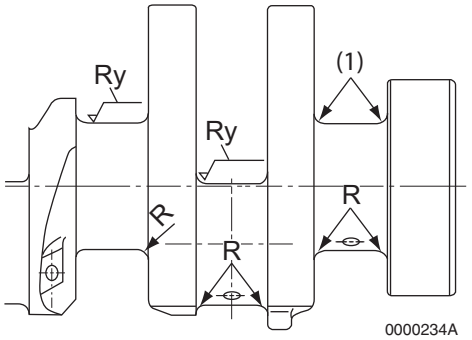

Figure 6-76

Item	Finishing Precision
Connecting Rod Journal Undersize Finished Size	1.6418 - 1.6422 in. (41.702 - 41.712 mm)
Main Bearing Journal Undersize Finished Size	1.8387 - 1.8391 in. (46.702 - 46.712 mm)
Journal Radius (R)	0.138 - 0.150 in. (3.5 - 3.8 mm)
Journal Face Finish (Ry)	0.8S (Super Polish)
Thrust Face Finish (1)	1.6

Inspection of Camshaft

1. Use V-blocks and a dial indicator to check camshaft bend **(Figure 6-77)**. Place the indicator on the center bearing journal.

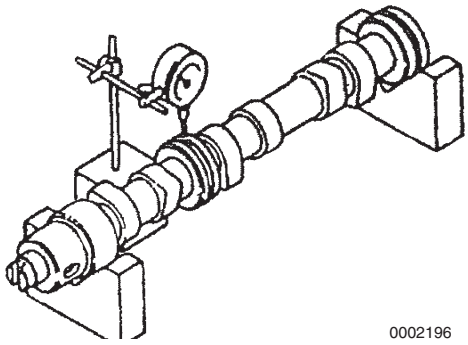

Figure 6-77

2. Rotate the camshaft and observe the runout. Record the measurements. *See Camshaft on page 6-7 for specifications.*
3. Measure the height of each lobe **(Figure 6-78, (1))**. Record the measurements. *See Camshaft on page 6-7 for specifications.*

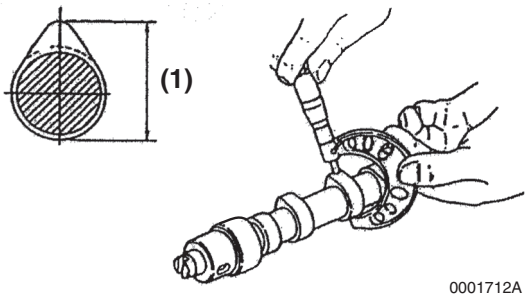

Figure 6-78

4. Measure the diameter of the gear end **(Figure 6-79, (1))**, intermediate **(Figure 6-79, (2)),** and flywheel end **(Figure 6-79, (3))** bearing journals. Record the measurements. *See Camshaft on page 6-7 for specifications.*

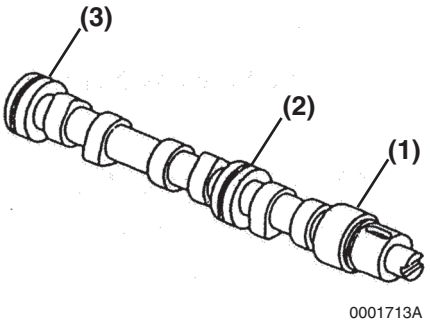

Figure 6-79

Inspection of Camshaft Bushing and Bores

1. Measure the I.D. of the front bushing and the remaining bores in the cylinder block. Record the measurements. *See Camshaft on page 6-7 for specifications.*

If the camshaft bushing is not within specification, replace using the appropriate service tool. If the remaining bores are not within specification, the cylinder block will require replacement as there are no bearing inserts used.

Inspection of Idler Gear and Shaft

1. Measure the outside diameter **(Figure 6-80, (1))** of the idler gear shaft **(Figure 6-80, (2))**. Record the measurements. *See Idler Gear Shaft and Bushing on page 6-8 for specifications.*
2. Measure the inside diameter **(Figure 6-80, (3))** of the idler gear bushing **(Figure 6-80, (4))**. Record the measurements. *See Idler Gear Shaft and Bushing on page 6-8 for specifications.*

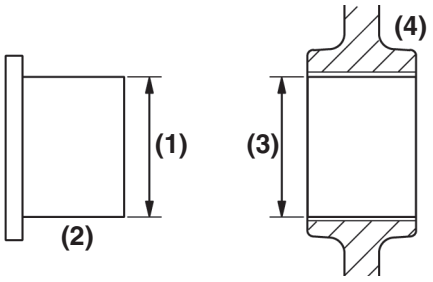

Figure 6-80

Honing and Boring

Pistons must move freely in the cylinders while maintaining adequate compression and oil sealing. If the cylinder walls are scuffed, scored, out-of-round, or tapered beyond specifications, rebore and hone to restore cylinders to usable condition. Slight imperfections can be corrected by honing alone.

1. **Boring** - Significant cylinder damage may be corrected by boring the cylinder to an oversize dimension. Refer to the appropriate parts catalog for available oversize pistons and piston rings.
   - Boring a cylinder should always be done in a properly equipped machine shop.
   - A bored cylinder should always be finished with a hone to properly prepare the cylinder surface so the new piston rings will seat properly.
   - After the cylinder has been bored and honed, install the appropriate oversize pistons and piston rings.
2. **Honing** - Minor cylinder imperfections may be corrected by using a rigid cylinder hone **(Figure 6-82, (1))**. Be sure not to exceed the maximum cylinder bore specification.

   Deglazing - A used cylinder that did not require boring or honing, should always be deglazed with a ball hone **(Figure 6-82, (2))** before installing new piston rings. This will properly prepare the cylinder surface to allow new piston rings to seat properly.

Note: When honing a cylinder, with either a ridged hone or a ball hone **(Figure 6-81, (1))**, move the rotating hone up and down in the cylinder bore to accomplish a 30° to 40° crosshatch pattern **(Figure 6-81)**. This will provide the ideal surface for the proper seating of new piston rings.

CAUTION

Do not allow the honing tool to operate in one position for any length of time. Damage to the cylinder wall will occur. Keep the tool in constant up-and-down motion.

0000090en

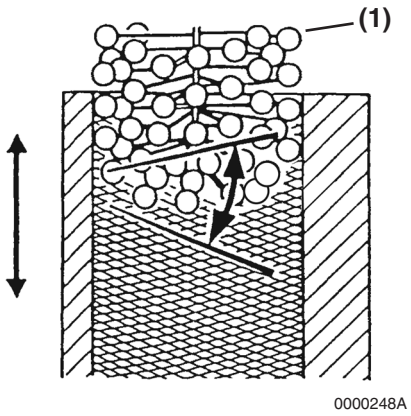

Figure 6-81

- Use a 50:50 mixture of diesel fuel and engine oil as a honing fluid.
- Use a 300-grit hone at 300 - 1200 rpm **(Figure 6-82)**.

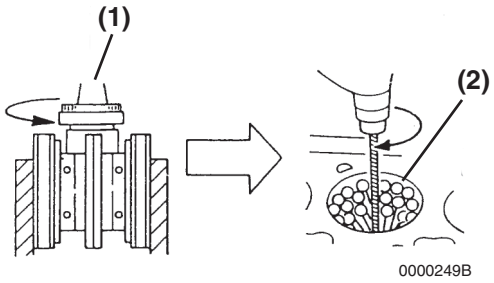

Figure 6-82

IMPORTANT

Solvents will not adequately remove honing residue, resulting in premature piston and ring wear. Always wash cylinders using hot, soapy water.

- When honing is completed, wash the cylinder block with hot water and soap. The cylinder wall is adequately cleaned when a white rag wiped in cylinder comes out clean. Use brushes to clean all passages and crevices. Rinse with hot water and dry with compressed air. Apply clean engine oil to all steel surfaces to prevent rusting.

Reassembly of Crankshaft and Piston Components

Notes:

- Proceed slowly. Make no forced assemblies unless a pressing operation is called for. All parts must be perfectly clean and lightly lubricated when assembled.
- Use new gaskets, seals and O-rings during assembly.
- Liberally apply clean engine oil to all internal parts during assembly.
- All fasteners should be tightened to a given torque. If a special torque is not provided in the *Special Torque Chart on page 6-14*, tighten to standard torque specifications. *See Tightening Torques for Standard Bolts and Nuts on page 4-22.*

Reassembly of Pistons

1. Select the parts needed to assemble the piston and connecting rod for one cylinder.
2. If removed, install a new wrist pin bushing **(Figure 6-83, (7))** using a press and the appropriate service tool. Be sure to align the oil holes.

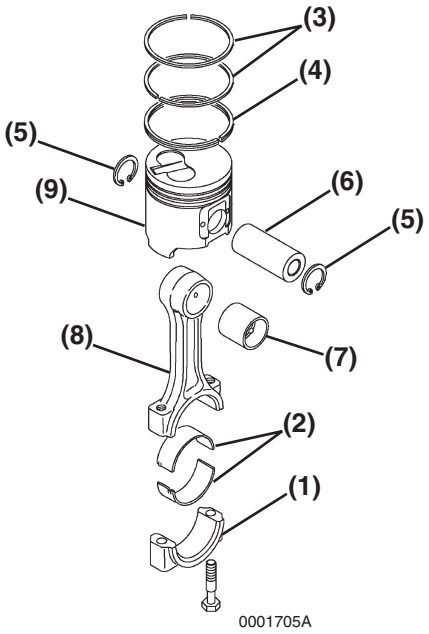

Figure 6-83

3. Reinstall one circlip **(Figure 6-83, (5))** into the piston. Ensure the circlip is securely seated in the groove.

IMPORTANT

The piston and connecting rod must be assembled with the correct orientation. When correctly assembled, the piston identification mark ***(Figure 6-84, (1))*** *stamped into the top of the piston will be on the opposite side of the connecting rod as the match marks* ***(Figure 6-84, (3))*** *stamped into the connecting rod and connecting rod cap. When reinstalled in the cylinder, the embossed mark* ***(Figure 6-84, (2))*** *cast into the beam of connecting rod will face the flywheel end of the engine.*

Note: The actual appearance of the match marks will vary but they will always be in the same locations.

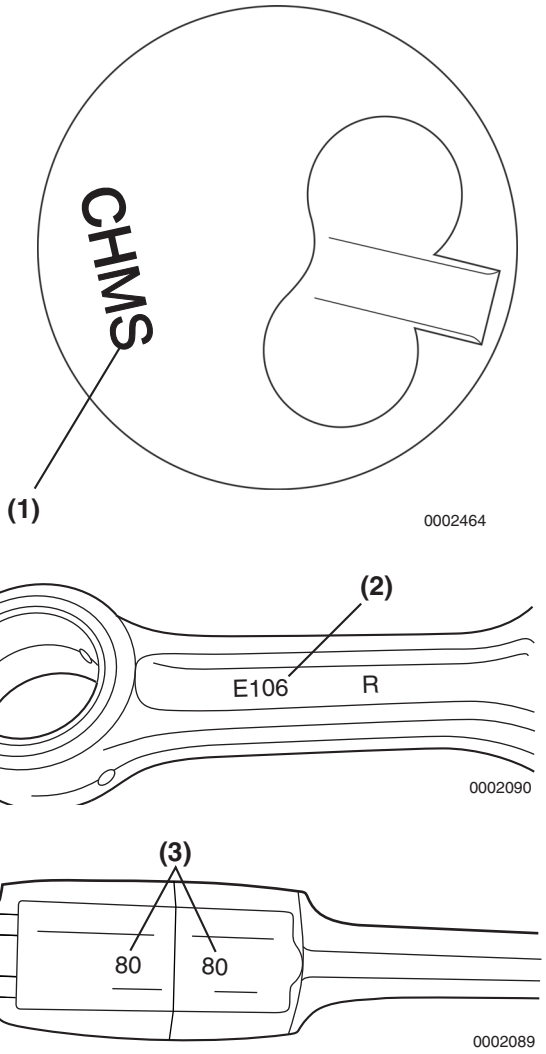

Figure 6-84

4. Place the connecting rod into the piston. The match marks **(Figure 6-85, (4))** on the connecting rod and cap must be on the opposite side as the piston identification mark **(Figure 6-85, (2))** on the top of the piston.

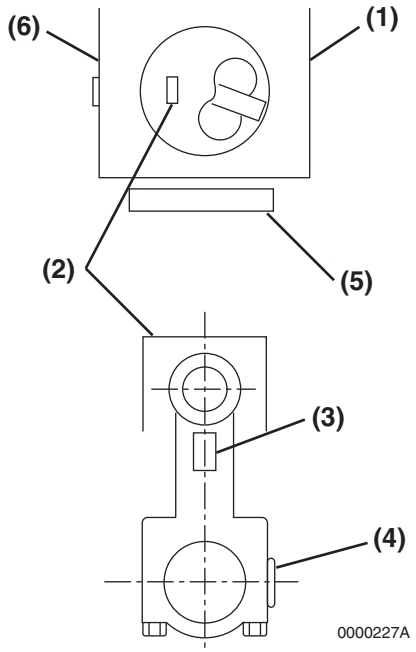

1 – Fuel Injection Pump Side of Engine
2 – Piston Identification Mark
3 – Embossed Mark on Connecting Rod
4 – Connecting Rod and Cap Match Marks
5 – Flywheel End of Engine
6 – Camshaft Side of Engine

Figure 6-85

5. Lubricate and install the wrist pin **(Figure 6-86, (6))** through the piston and connecting rod.
6. Reinstall the second circlip **(Figure 6-86, (5))** and ensure it is securely seated in the groove.

Note: If installing new piston rings the end gap must be checked and adjusted as necessary. *See Inspection of Pistons, Piston Rings and Wrist Pin on page 6-48.* Use a piston ring end gap filing tool to adjust the piston ring end gap on new piston rings.

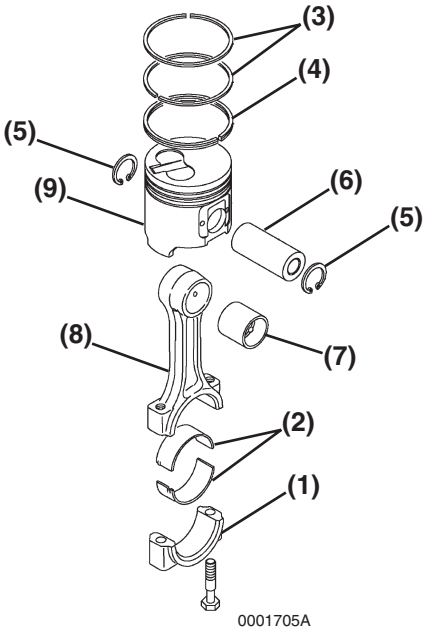

Figure 6-86

Note: Reinstall the top and second piston rings with the stamped “makers mark” **(Figure 6-87, (1))** facing the top of the piston. The “makers mark” may vary in appearance but will always be located on the top surface of the piston ring adjacent to the piston ring gap. The oil ring and oil ring expander can be installed either side up.

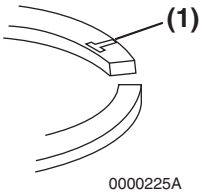

Figure 6-87

IMPORTANT

Always use a piston ring expander when installing piston rings. Never attempt to install piston rings by hand.

7. Reinstall the oil ring expander **(Figure 6-88, (4))**. Install the oil ring **(Figure 6-88, (3))** with the end gap at 180° from the expander end gap.
8. Reinstall the second compression ring **(Figure 6-88, (2))**. This ring is identified by its dark color and tapered face profile.
9. Reinstall the top compression ring **(Figure 6-88, (1))**. This ring is identified by its silver color and barrel-shaped face profile.

IMPORTANT

*The oil ring expander **(Figure 6-88, (4))** end gap must be located 180° from the oil ring **(Figure 6-88, (3))** end gap.*

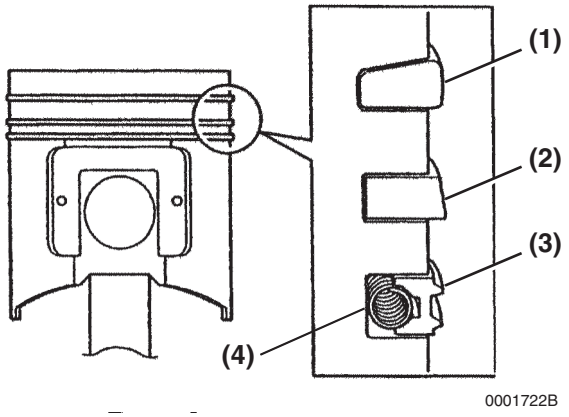

Figure 6-88

10. Stagger the piston ring end gaps at 120° intervals **(Figure 6-89, (1, 2, and 3))**. Do not position the top piston ring end gap in line with the wrist pin.

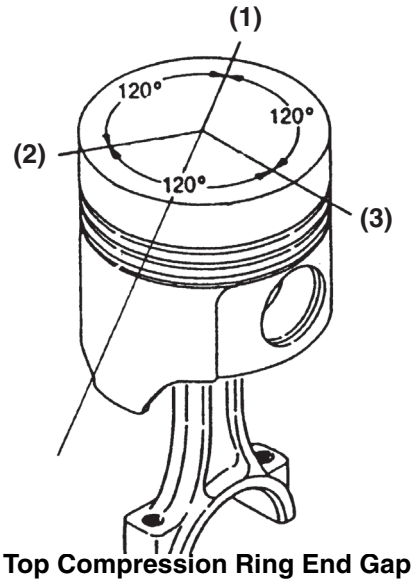

1 – Top Compression Ring End Gap
2 – Second Compression Ring End Gap
3 – Oil Ring End Gap

Figure 6-89

Installation of Crankshaft

1. If removed, reinstall the key and timing gear on crankshaft.
2. Install new bearing inserts **(Figure 6-90, (1))** and thrust bearing **(Figure 6-90, (2))** in the cylinder block and main bearing caps. Be sure the oil holes in the upper bearing shells align with the oil ports in the cylinder block. Apply a liberal coat of clean engine oil to the bearings and crankshaft journals.

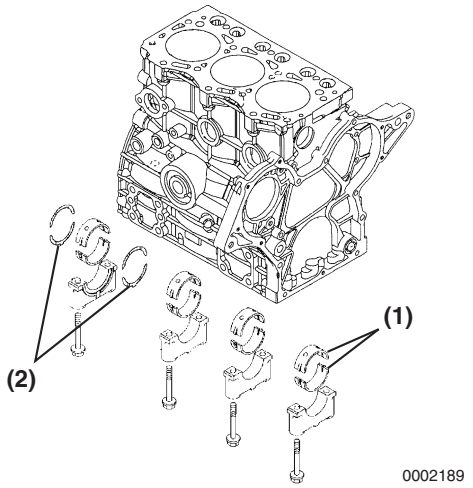

Figure 6-90

3. Install the crankshaft in the engine.

IMPORTANT

The main bearing caps are numbered and have arrows for proper positioning. The No. 1 cap is at the flywheel end. The arrows point toward the flywheel end of the engine.

4. Reinstall the main bearing caps.
5. Apply a light coat of clean engine oil to the bearing cap bolts and tighten the bolts to the specified torque in two stages (1/2 then full torque). *See Special Torque Chart on page 6-14.*
6. Rotate the crankshaft to ensure it turns freely.
7. Apply ThreeBond Liquid Gasket No. 1212, Yanmar Part No. 977770-01212 to the mounting flange of the flywheel housing **(Figure 6-91, (2))**.
8. Align the flywheel housing with the two dowel pins **(Figure 6-91, (3))**.
9. Reinstall flywheel housing and seal assembly.
10. Reinstall the flywheel **(Figure 6-91, (1))** and tighten the bolts to the specified torque. *See Special Torque Chart on page 6-14.*

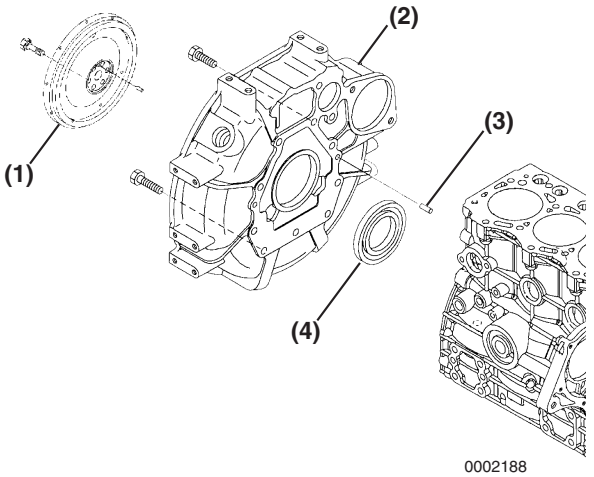

Figure 6-91

Installation of Pistons

IMPORTANT

Do not allow the connecting rod to contact the crankshaft journal during piston installation. Damage to the crankshaft bearing journal may result.

1. Lubricate piston, piston rings, and cylinder with clean engine oil or assembly lubricant.
2. Rotate the crankshaft so the crankpin for the piston being installed is near bottom dead center.

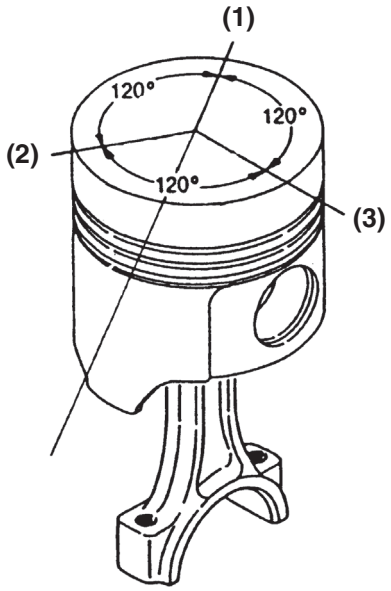

1 – Top Compression Ring End Gap
2 – Second Compression Ring End Gap
3 – Oil Ring End Gap

Figure 6-92

IMPORTANT

*Ensure piston ring gaps are located correctly **(Figure 6-92)**.*

3. Using a piston ring compressor, compress the piston rings.

IMPORTANT

*The piston and connecting rod must be reinstalled with the correct orientation. When installed correctly, the identification mark **(Figure 6-93, (2))** stamped into the top of the piston will be on the same side of the engine as the fuel injection pump **(Figure 6-93, (1))** and the embossed mark **(Figure 6-93, (3))** cast into the connecting rod beam will face the flywheel end of the engine **(Figure 6-93, (5))**.*

4. Carefully reinstall the piston and rod assembly. Be sure the match marks **(Figure 6-93, (4))** stamped into the connecting rod and cap are facing the fuel injection pump side of the cylinder block, and the piston identification mark **(Figure 6-93, (2))** stamped into the piston top is facing the camshaft side **(Figure 6-93, (6))**. The embossed mark cast into the connecting rod beam **(Figure 6-93, (3))** will be facing the flywheel end of the engine **(Figure 6-93, (5))**.

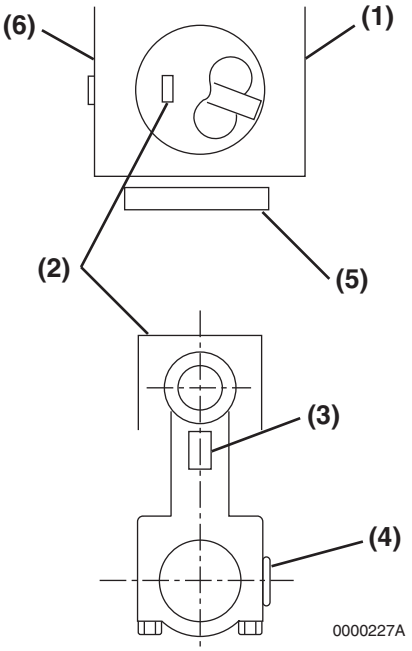

1 – Fuel Injection Pump Side of Engine
2 – Piston Identification Mark
3 – Embossed Mark on Connecting Rod
4 – Rod and Cap Match Marks
5 – Flywheel End of Engine
6 – Camshaft Side of Engine

Figure 6-93

5. Reinstall the bearing inserts **(Figure 6-94, (1))** in the connecting rod and cap.
6. Apply a liberal coat of clean engine oil to the bearing inserts and crankshaft journal.

7. Apply a light coat of clean engine oil to the rod cap bolts. Reinstall the connecting rod cap **(Figure 6-94, (2))**. Tighten the connecting rod bolts to the specified torque in two stages (1/2 then full torque). *See Special Torque Chart on page 6-14.*

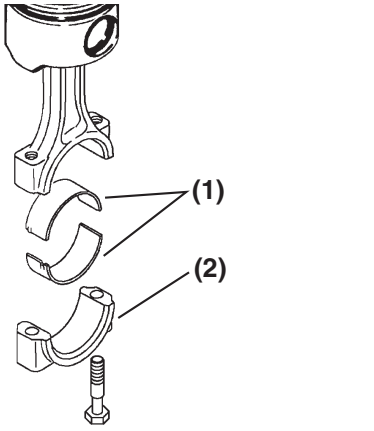

Figure 6-94

8. Reinstall the remaining pistons in their respective cylinders.

Reassembly of Camshaft and Timing Components

Installation of Gear Case

1. If removed, install a new camshaft bushing **(Figure 6-95, (3))** using the appropriate service tool.
2. Apply a continuous bead of ThreeBond Liquid Gasket No. 1212, Yanmar Part No. 977770-01212 to the mounting area of the gear case. Be sure to circle each bolt hole.
3. Reinstall dowels and new O-rings **(Figure 6-95, (2))**.

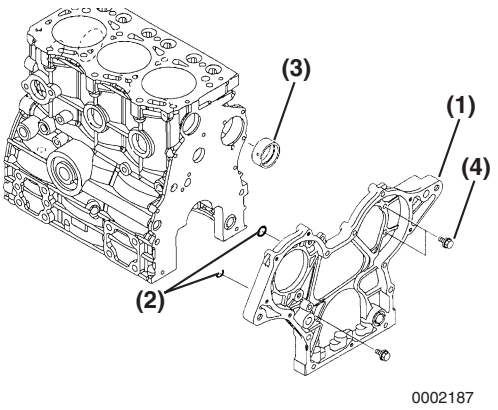

Figure 6-95

4. Reinstall the gear case **(Figure 6-95, (1))**. Tighten the bolts **(Figure 6-95, (4))** to the specified torque.

Installation of Camshaft

Note: The gear housing must be installed prior to reinstalling the camshaft. *See Installation of Gear Case on page 6-60.*

1. If removed, reinstall the camshaft end plate **(Figure 6-96, (1))**, key, and camshaft gear **(Figure 6-96, (4))** onto the camshaft using a press.
   - Heat the gear to 356 - 392°F (180 - 200°C) and press onto the end of the camshaft.
2. Lubricate the camshaft **(Figure 6-96, (2))** with clean engine oil or assembly lube. Slowly insert the camshaft through the front of the engine.
3. Reinstall and tighten the cap screws **(Figure 6-96, (3))**.

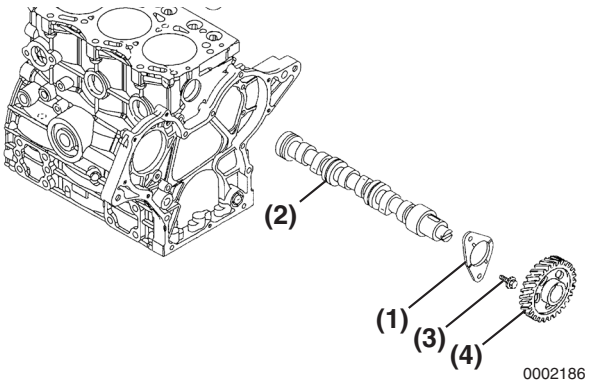

Figure 6-96

4. Lubricate the camshaft lobes and tappets with clean oil or assembly lube. Reinstall the tappets in their respective locations in the cylinder block. Push the tappets fully into the tappet bores until they make solid contact with the camshaft.
5. If removed, reinstall the fuel injection pump. Adjust the fuel injection timing after installation. *See Checking and Adjusting Fuel Injection Timing on page 7-19.*

Installation of Timing Gears

1. Set No. 1 piston to top dead center.
2. Rotate the camshaft until mark **(Figure 6-98, (C))** is approximately at the 9 o'clock position.
3. Lubricate the idler gear **(Figure 6-97, (3))**, bushing **(Figure 6-97, (2))** and idler gear shaft **(Figure 6-97, (1))** with clean engine oil or assembly lube.

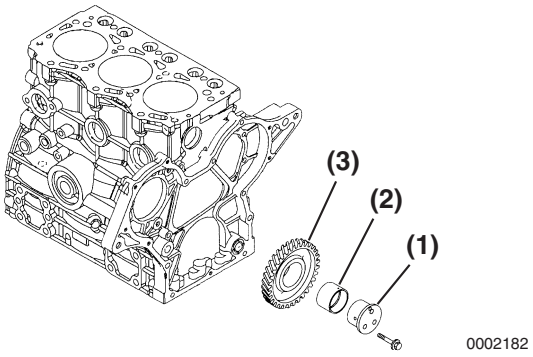

Figure 6-97

4. Align the timing gears as shown in **Figure 6-98**.
5. Reinstall the idler gear and idler gear shaft. Be sure the oil hole in the bushing is facing toward the top of the engine.
6. Ensure all three timing marks **(Figure 6-98, (A, B, and C))** are aligned.

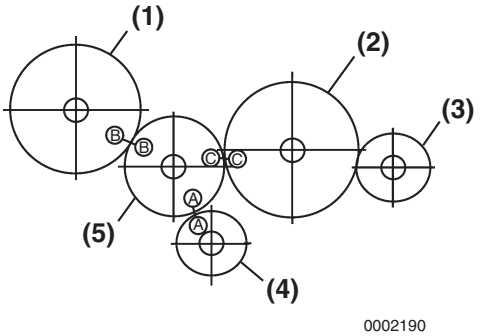

1 – Fuel Injection Pump Gear
2 – Camshaft Gear
3 – Optional Accessory Drive Gear
4 – Crankshaft Gear
5 – Idler Gear

Figure 6-98

7. When all gears are properly aligned, tighten the idler gear retaining bolts to specified torque. *See Special Torque Chart on page 6-14 for specifications.*

Installation of Gear Case Cover

1. Apply a continuous bead of ThreeBond Liquid Gasket No. 1212, Yanmar Part No. 977770-01212 to the mounting area of the gear case cover **(Figure 6-99, (1))**. Be sure to circle the bolt holes.

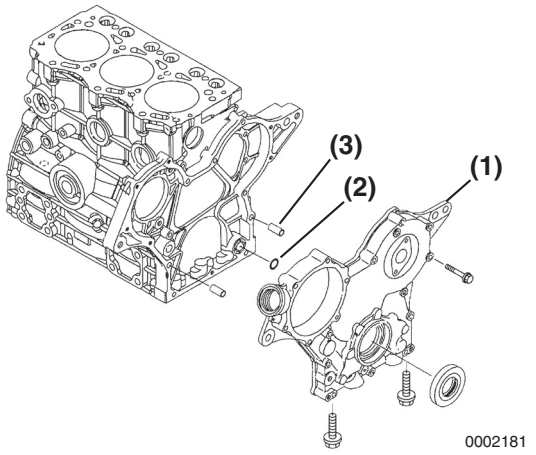

Figure 6-99

2. Reinstall the dowels **(Figure 6-99, (3))** and a new O-ring **(Figure 6-99, (2))**.

IMPORTANT

Be sure to align the flats on the oil pump with the flats on the crankshaft gear.

3. Reinstall the timing gear case cover.
4. Reinstall and tighten the gear case cover bolts.
5. Reinstall the crankshaft pulley.
6. Reinstall the washer and bolt. Tighten to the specified torque. *See Special Torque Chart on page 6-14 for specifications.*

Installation of Oil Pan

1. Reinstall the oil pickup tube **(Figure 6-100, (1))** and a new O-ring **(Figure 6-100, (2))**.

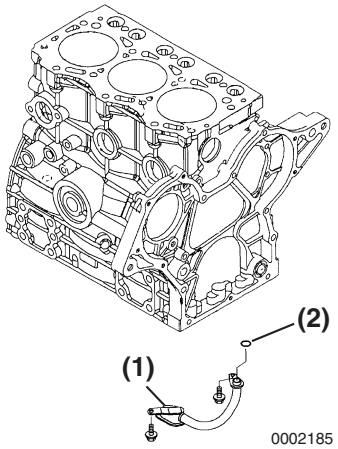

Figure 6-100

2. Apply a continuous bead of ThreeBond Liquid Gasket No. 1212, Yanmar Part No. 977770-01212 to the mounting surface of the oil pan **(Figure 6-101, (2))** and crankcase extension (if equipped) **(Figure 6-101, (1))**. Be sure to circle each bolt hole.
3. If equipped, reinstall the crankcase extension **(Figure 6-101, (1))**. Reinstall the oil pan and tighten the bolts securely.

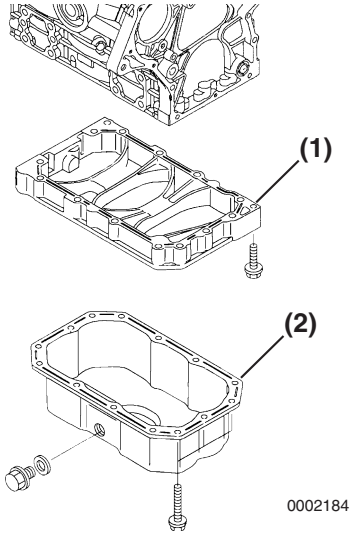

Figure 6-101

Final Assembly of Engine

1. Reinstall the starter motor.
2. Reinstall the cylinder head. *See Reassembly of Cylinder Head on page 6-31.*
3. Reinstall the engine in the machine.
4. Reconnect the fuel and coolant lines.
5. Reinstall the alternator.
6. Reconnect and adjust the throttle cable.
7. Reconnect all electrical connections.
8. Fill the engine with oil and coolant.
9. Reconnect the battery cables, negative (-) cable last.

Section 7

FUEL SYSTEM

Page

Before You Begin Servicing 7-3
Introduction 7-5
- Fuel Injection Pump 7-5
- Stop Solenoid 7-6

Fuel System Specifications 7-7
- Special Torque Chart 7-7
- Test and Adjustment Specifications 7-7

Special Service Tools 7-8
Measuring Instruments 7-8
Fuel System Diagram 7-9
Fuel System Components 7-10
Fuel Injection Lines 7-11
- Removal of High-Pressure Fuel Injection Lines 7-11
- Installation of High-Pressure Fuel Injection Lines 7-12
- Removal of Fuel Return Line 7-12
- Installation of Fuel Return Line 7-13

Fuel Injection Pump 7-13
- Removal of Fuel Injection Pump 7-13
- Installation of Fuel Injection Pump 7-16

Checking and Adjusting Fuel Injection Timing 7-19
- Checking Fuel Injection Timing 7-19
- Adjusting Fuel Injection Timing 7-23

Fuel Injectors 7-23
- Removal of Fuel Injectors 7-23
- Testing of Fuel Injectors 7-24

Disassembly and Inspection of Fuel Injectors 7-27
Adjusting Fuel Injector Pressure 7-28
Reassembly of Fuel Injectors 7-29
Installation of the Fuel Injectors 7-29

BEFORE YOU BEGIN SERVICING

⚠ WARNING



ENTANGLEMENT HAZARD!

- Stop the engine before you begin to service it.
- NEVER leave the key in the key switch when you are servicing the engine. Someone may accidentally start the engine and not realize you are servicing it. This could result in a serious injury.
- If you must service the engine while it is operating, remove all jewelry, tie back long hair, and keep your hands, other body parts and clothing away from moving / rotating parts.
- Failure to comply could result in death or serious injury.

0000010en

⚠ WARNING



FUME / BURN HAZARD!

- Always read and follow safety related precautions found on containers of hazardous substances like parts cleaners, primers, sealants and sealant removers.
- Failure to comply could result in death or serious injury.

0000014en

⚠ WARNING



To prevent possible eye injury, always wear SAFETY GLASSES while servicing the engine.

0000013en

⚠ CAUTION



FLYING OBJECT HAZARD!

- ALWAYS wear eye protection when servicing the engine and when using compressed air or high-pressure water. Dust, flying debris, compressed air, pressurized water or steam may injure your eyes.
- Failure to comply may result in minor or moderate injury.

0000003en

⚠ CAUTION

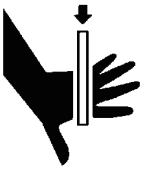

PINCH HAZARD!

Carefully rotate the alternator toward the cylinder block while loosening the V-belt. Failure to comply may result in minor or moderate injury.

0000014en

CAUTION

- **NEVER remove or attempt to remove the tamper-proof devices from the full-load fuel adjusting screw or the high-speed throttle limit screw on the fuel injection pump and governor assembly. These adjustments have been made at the factory to meet all applicable emissions regulations and then sealed.**
- **NEVER attempt to make any adjustments to these sealed adjustment screws. If adjustments are required, they can be made only by a qualified fuel injection shop that will ensure the injection pump continues to meet all applicable emissions regulations and then replace the tamper-proof seals.**
- **Tampering with or removing these devices may void the "Yanmar Limited Warranty."**

0000146en

CAUTION

Never use a steel wire brush to clean fuel injectors. Damage to the nozzle and other components is likely to result.

0000172en

CAUTION

Do not loosen or remove the four bolts retaining the fuel injection pump drive gear to the fuel injection pump hub. Do not disassemble the fuel injection pump drive gear from the hub. Correct fuel injection timing will be very difficult or impossible to achieve.

0000031en

CAUTION

Remove or install the high-pressure fuel injection lines as an assembly whenever possible. Disassembling the high-pressure fuel injection lines from the retainers or bending any of the fuel lines will make it difficult to reinstall the fuel lines.

0000047en

CAUTION

After marking the position of the pump drive gear, do not rotate the engine crankshaft. Rotating the crankshaft will cause the fuel injection pump to become misaligned.

0000048en

CAUTION

Do not rotate the crankshaft with the injection pump removed.

0000083en

CAUTION

The fuel return line is a one-piece assembly. Use care not to bend or twist the fuel return line.

0000171en

INTRODUCTION

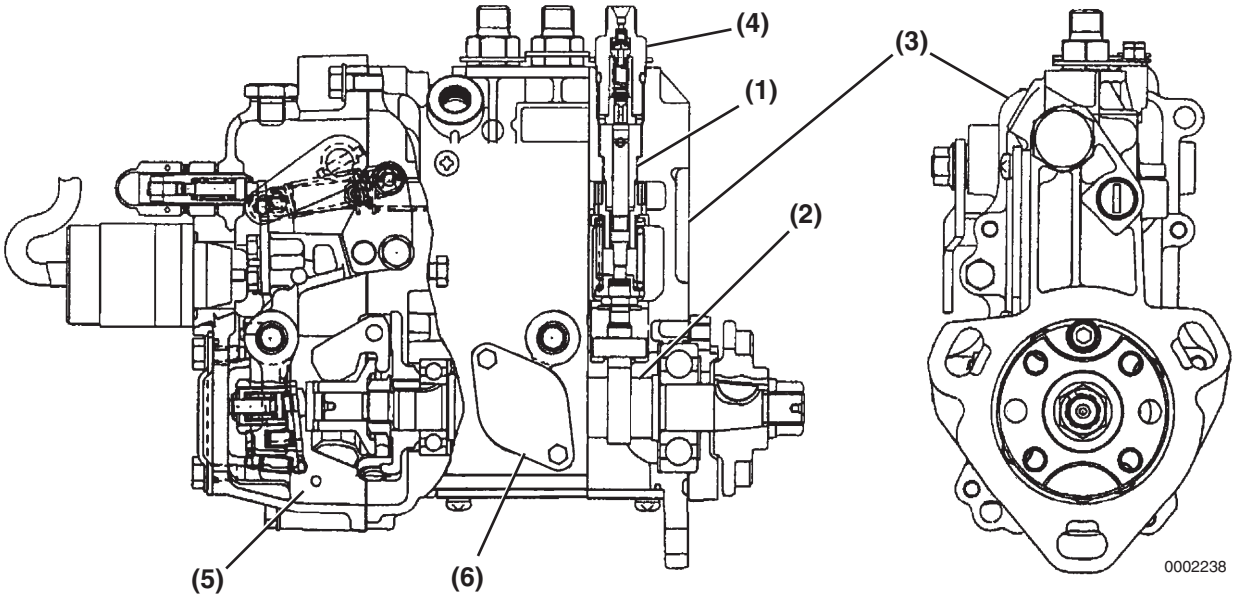

Figure 7-1

This section of the *Service Manual* describes the procedures necessary to remove, install, and time the ML fuel injection pump and its associated system components. This fuel injection pump is representative of the fuel injection pumps used on other TNV IDI model engines.

Fuel Injection Pump

Note: If the ML fuel injection pump itself requires servicing, it must be taken to an authorized Yanmar FIE (Fuel Injection Equipment) repair facility.

The following describes the features of the ML fuel injection pump, manufactured by Yanmar.

The fuel injection pump is a very important component of the engine. It is capable of making very precise fuel delivery adjustments according to the varied loads applied to the engine.

All of the fuel injection pump components are very precisely machined. It is extremely important to follow good service practices and maintain cleanliness when servicing the fuel injection pump.

The Yanmar ML Fuel Injection Pump is an in-line type pump which consists of a fuel supply plunger **(Figure 7-1, (1))** for each cylinder, a camshaft **(Figure 7-1, (2))**, and a pump housing **(Figure 7-1, (3))**. A delivery valve **(Figure 7-1, (4))** connects to a high-pressure fuel line for each cylinder. The fuel injection pump housing contains a governor **(Figure 7-1, (5))**.

Fuel from the fuel tank to the fuel injection pump is delivered by a low-pressure electric fuel pump. On a few special models, a mechanical fuel pump is used instead of an electric pump. The mechanical fuel pump is mounted to the fuel injection pump housing in place of the cover plate **(Figure 7-1, (6))**.

Fuel to be injected into the cylinders is pressurized by the up and down motion of each camshaft-driven plunger, and is then supplied by the high-pressure fuel lines to the respective fuel injector.

CAUTION

- **NEVER remove or attempt to remove the tamper-proof devices from the full-load fuel adjusting screw or the high-speed throttle limit screw on the fuel injection pump and governor assembly. These adjustments have been made at the factory to meet all applicable emissions regulations and then sealed.**
- **NEVER attempt to make any adjustments to these sealed adjustment screws. If adjustments are required, they can be made only by a qualified fuel injection shop that will ensure the injection pump continues to meet all applicable emissions regulations and then replace the tamper-proof seals.**
- **Tampering with or removing these devices may void the "Yanmar Limited Warranty."**

0000146en

The fuel injector is essentially a spring-loaded valve. When fuel pressure from the fuel injection pump reaches a pre-determined level, the pintle (valve) is forced off its seat and fuel is atomized as it passes between the pintle and seat. The timing and quantity of the fuel injected into the cylinder is controlled by the fuel injection pump and governor assembly.

Stop Solenoid

The ML fuel injection pumps are equipped with a stop solenoid that controls the fuel flow inside the fuel injection pump.

With the starter switch in the OFF position, no current flows to the stop solenoid and the solenoid plunger is extended holding the fuel injection pump fuel rack in the "closed" position and not allowing fuel to flow through the injection pump and to the engine.

When the starter switch is turned to the start position, the "pull coil" (36.5 Amp draw / white wire) inside the solenoid is activated and pulls the solenoid plunger into the solenoid. This releases the fuel injection pump fuel rack, allowing fuel to flow through the injection pump and allowing the engine to start and run.

When the starter switch is returned to the ON or RUN position, the "pull coil" no longer receives current and the "hold coil" (0.5 Amp draw / red wire) inside the solenoid is activated. The "hold coil" holds the solenoid plunger in the RUN position, allowing fuel to continue flowing and the engine to continue running.

To stop the engine, the key switch is turned to the OFF position. Current no longer flows to the stop solenoid "hold coil," and the solenoid plunger extends and moves the injection pump fuel rack to the "closed" position, and shutting off the fuel flow and stopping the engine.

Failure of the stop solenoid could result in the engine not starting, the engine stopping suddenly or the engine continuing to run with the key switch returned to the ON or RUN position, or the engine failing to stop when the key switch is turned to the OFF position. Use a VOA multimeter or continuity light to check for a good ground and 12V at the stop solenoid in the correct sequence.

FUEL SYSTEM SPECIFICATIONS

Special Torque Chart

Component	Tightening Torque	Lubricating Oil Application (Thread Portion and Seat Surface)
Fuel Injector	36.1 - 43.5 ft·lb (49 - 59 N·m, 5.0 - 60 kgf·m)	Not Applied
Fuel Pump Drive Gear Nut	44 - 51 ft·lb (59 - 69 N·m; 6 - 7 kgf·m)	Not Applied
High -Pressure Fuel Injection Line Nuts	22 - 25 ft·lb (29 - 34 N·m; 3.0 - 3.5 kgf·m)	Not Applied
Fuel Return Line Nuts	18 - 24 ft·lb (24 - 33 N·m; 2.5 - 3.3 kgf·m)	Not Applied
Fuel Injection Pump Mounting Nuts	17 - 21 ft·lb (23 - 28 N·m; 2.3 - 2.9 kgf·m)	Not Applied
Fuel Injector Nozzle Case Nut	21.4 - 36.1 ft·lb (29 - 49 N·m; 3.0 - 5.0 kgf·m)	Not Applied

Test and Adjustment Specifications

Fuel Injector Pressure	Fuel Injection Timing
1784 - 1929 psi (12.3 - 13.3 MPa; 125 - 136 kgf/cm^2)	*See Checking and Adjusting Fuel Injection Timing on page 7-19*

Note: Fuel injector pressures given are for used parts. New injectors (5 hours operation or less) will read approximately 72.5 psi (0.5 MPa; 5 kgf/cm^2) higher.

SPECIAL SERVICE TOOLS

Note: Tools not having Yanmar part numbers must be acquired locally.

No.	Tool Name	Application	Illustration
1	Torque Wrench (Locally Available)	For tightening nuts and bolts to the specified torque	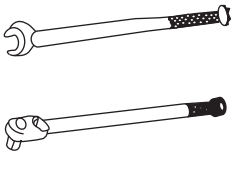 0000840

MEASURING INSTRUMENTS

No.	Instrument Name	Application	Illustration
1	Fuel Injector Tester (Locally Available)	For observing injection spray pattern of fuel injection nozzle and measuring injection pressure	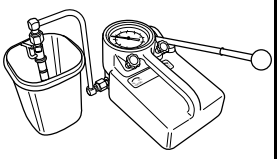
2	“Spill-Timing” Tool (Shop Fabricated)*	Used to set fuel injection timing	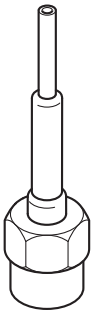

* *Make from a short piece of the end of a high-pressure fuel line, a high-pressure fuel line nut, and a short piece of clear plastic tubing (a thin nozzle from an aerosol spray can works well). Drill out the end of the fuel line to accept the nozzle. Use a small amount of silicone sealant to seal the nozzle into the fuel line.*

FUEL SYSTEM DIAGRAM

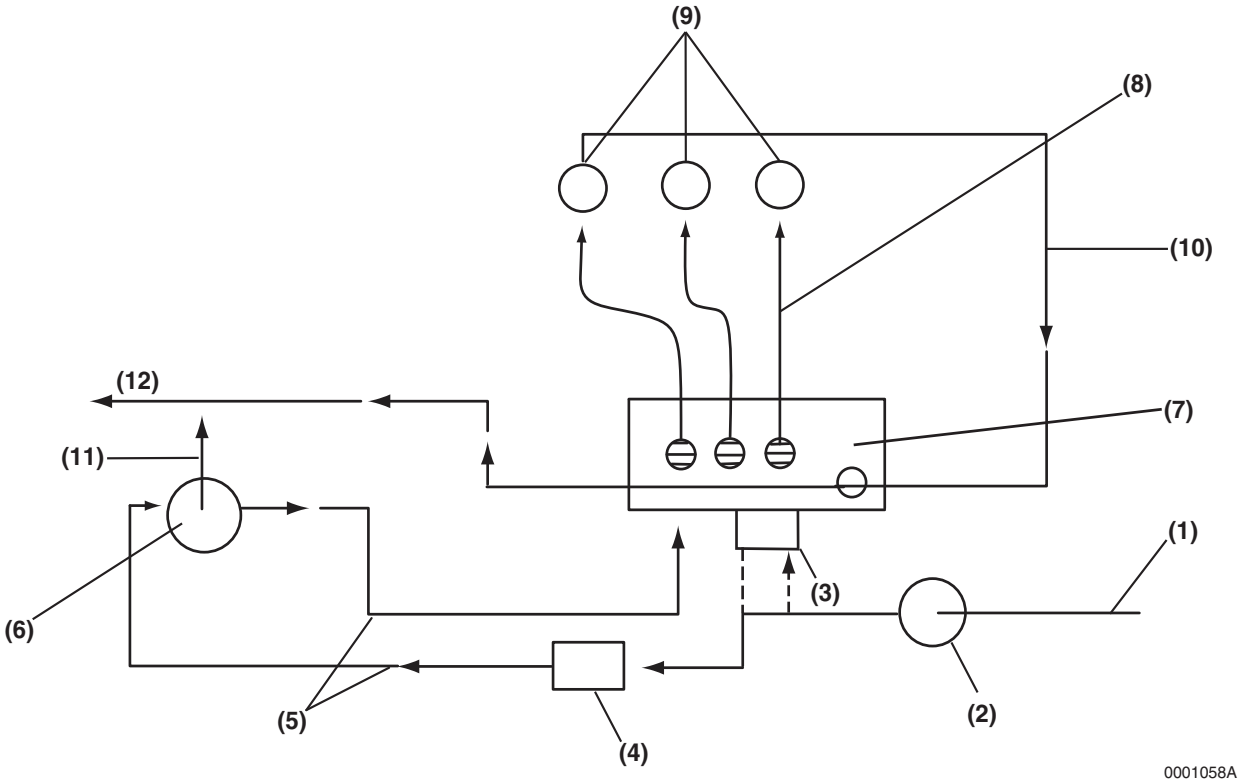

Figure 7-2

1 – Diesel Fuel Supply
2 – Fuel Filter / Water Separator
3 – Mechanical Fuel Pump (Used in place of the electric fuel pump on some models)
4 – Electric Fuel Pump (Used on models without mechanical fuel pump)
5 – Low-Pressure Fuel Supply Lines
6 – Fuel Filter
7 – Fuel Injection Pump
8 – High-Pressure Fuel Injection Lines
9 – Fuel Injectors
10 – Fuel Return from Fuel Injectors
11 – Air Bleed Orifice
12 – Fuel Return to Tank

FUEL SYSTEM COMPONENTS

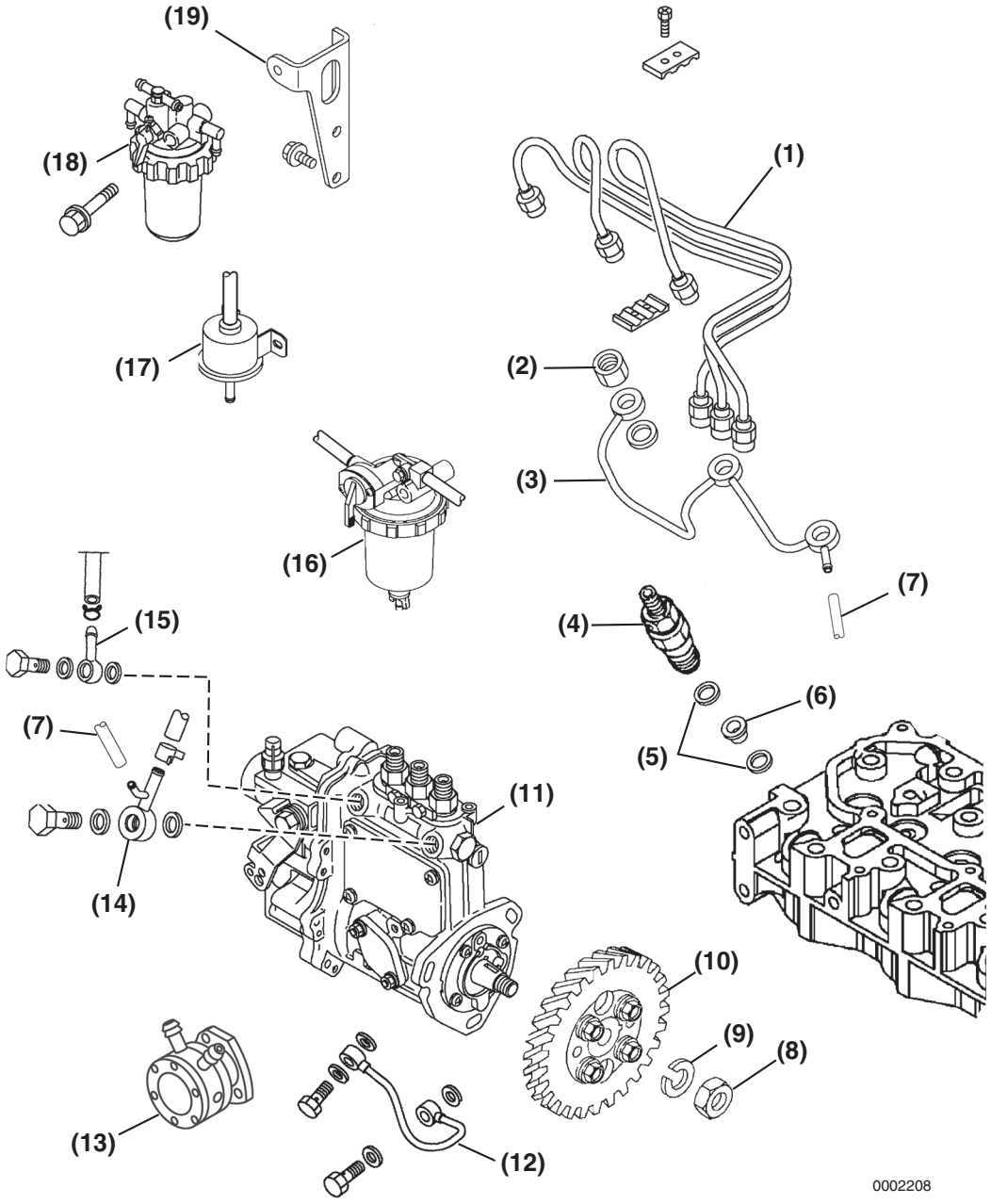

Figure 7-3

1 – High-Pressure Fuel Injection Lines
2 – Fuel Return Line Nut
3 – Fuel Return Line
4 – Fuel Injector
5 – Gasket
6 – Protector
7 – Fuel Return Hose
8 – Fuel Injection Pump Drive Gear Nut
9 – Lock Washer
10 – Fuel Injection Pump Drive Gear Assembly (DO NOT remove or loosen the four bolts that fasten the injection pump drive gear to the injection pump drive gear hub!)
11 – Fuel Injection Pump
12 – Lube Oil Line
13 – Mechanical Fuel Supply Pump (Optional on some models)
14 – Fuel Return Fitting
15 – Low Pressure Fuel Inlet Fitting
16 – Fuel / Water Separator
17 – Electric Fuel Supply Pump
18 – Fuel Filter
19 – Fuel Filter Mount

FUEL INJECTION LINES

Removal of High-Pressure Fuel Injection Lines

CAUTION

Remove or install the high-pressure fuel injection lines as an assembly whenever possible. Disassembling the high-pressure fuel injection lines from the retainers or bending any of the fuel lines will make it difficult to reinstall the fuel lines.

0000047en

Note: To prevent “rounding” the fuel line nuts always use a “line” or “flare nut” wrench.

1. Close any fuel valves in the fuel supply line.
2. Clean the area to keep contaminants from entering the fuel system.
3. Place a drain pan under the fuel injection pump to catch any spillage.
4. Loosen the fuel line nuts at the fuel injection pump.
5. Next, loosen the fuel line nuts at the fuel injectors. Use one wrench to hold the fuel return line nut and fuel return line from rotating. Use a second wrench to loosen the fuel line nut **(Figure 7-4)**. Repeat with the remaining fuel injectors.

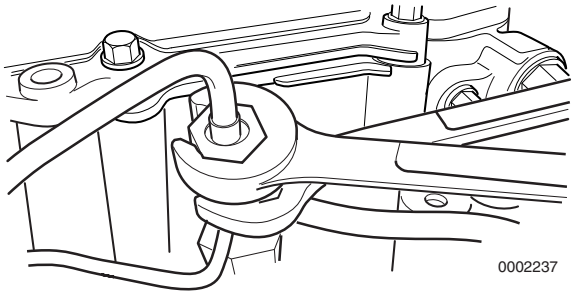

Figure 7-4

6. Finish loosening all the fuel line nuts and remove the high-pressure fuel lines as an assembly being careful not to bend any of the fuel lines. Be sure to protect the fuel system from contamination by plugging or covering all open connections.
7. Plug or cap all openings to minimize leakage and prevent contamination.

Installation of High-Pressure Fuel Injection Lines

CAUTION

Remove or install the high-pressure fuel injection lines as an assembly whenever possible. Disassembling the high-pressure fuel injection lines from the retainers or bending any of the fuel lines will make it difficult to reinstall the fuel lines.

0000047en

Note: To prevent “rounding” the fuel line nuts always use a “line” or “flare nut” wrench.

1. Start all the fuel line nuts by hand. Then use a wrench to just “snug” all the fuel line nuts.
2. Tighten the fuel line nuts on the fuel injection pump to the specified torque. *See Special Torque Chart on page 7-7*.
3. When tightening the fuel line nuts on the fuel injectors, use one wrench to hold the fuel return line nut and fuel return line from rotating. Use a second wrench to tighten the fuel line nuts **(Figure 7-5)**. *See Special Torque Chart on page 7-7*.

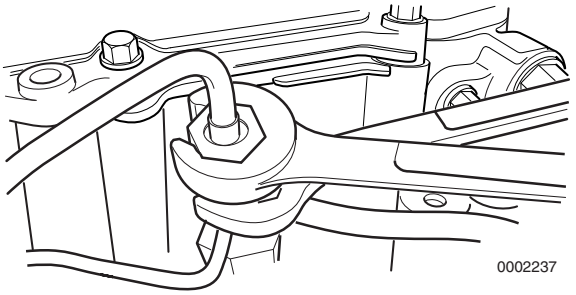

Figure 7-5

Removal of Fuel Return Line

1. Clean the area to keep contaminants from entering the fuel system.
2. Remove the high-pressure fuel injection lines as an assembly. *See Removal of High-Pressure Fuel Injection Lines on page 7-11.*

CAUTION

The fuel return line is a one-piece assembly. Use care not to bend or twist the fuel return line.

0000171en

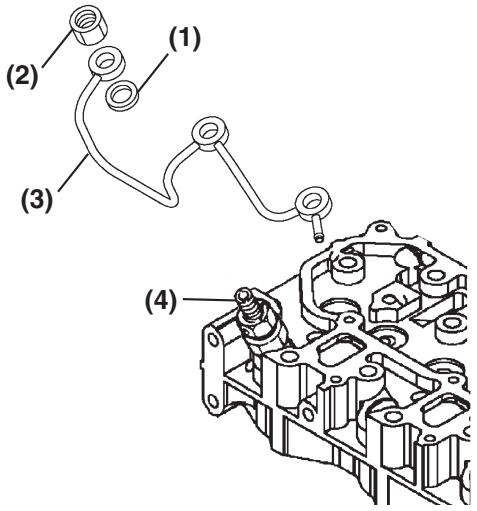

Figure 7-6

3. Remove all fuel return line nuts **(Figure 7-6, (2))** from the injectors **(Figure 7-6, (4))**.

4. Remove the fuel return hose from the fuel return fitting on the fuel injection pump.
5. Carefully remove the fuel return line assembly **(Figure 7-6, (3))**.
6. Remove and discard the copper gasket **(Figure 7-6, (1))** from each fuel injector.
7. Plug or cap all openings to minimize leakage and prevent contamination.

Installation of Fuel Return Line

1. Install a new copper gasket on each fuel injector.

CAUTION

The fuel return line is a one-piece assembly. Use care not to bend or twist the fuel return line.

0000171en

2. Carefully reinstall the fuel return line assembly.
3. Reinstall and hand-tighten the fuel return line nuts.
4. Tighten the fuel return line nuts to the specified torque. *See Special Torque Chart on page 7-7.*
5. Reinstall the fuel return hose.
6. Reinstall the high-pressure fuel injection line assembly. *See Installation of High-Pressure Fuel Injection Lines on page 7-12.*

FUEL INJECTION PUMP

Removal of Fuel Injection Pump

1. Loosen the cooling fan V-belt.
2. Remove the engine cooling fan guard (if equipped), engine cooling fan **(Figure 7-7, (2))**, spacer **(Figure 7-7, (3))** if equipped, V-pulley **(Figure 7-7, (4))** and cooling fan V-belt **(Figure 7-7, (1))**.

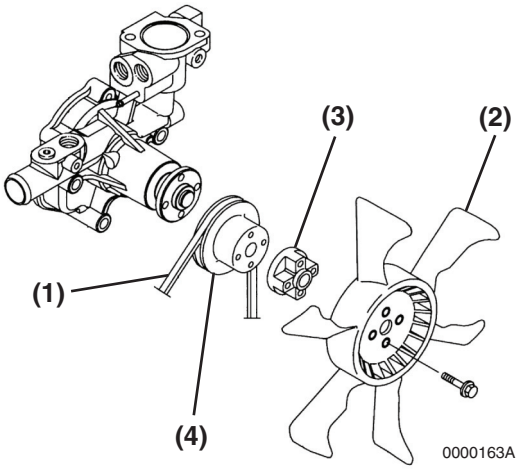

Figure 7-7

3. Close any fuel valves in the fuel supply line.
4. Place a drain pan under the fuel injection pump to catch any spillage.
5. Clean the area to keep contaminants from entering the fuel system.
6. Remove the high-pressure fuel injection lines as an assembly. *See Removal of High-Pressure Fuel Injection Lines on page 7-11.*
7. Disconnect the fuel return lines from the fitting on the fuel injection pump **(Figure 7-8, (1)).** Plug the open ends of the lines to minimize leakage and prevent contamination.

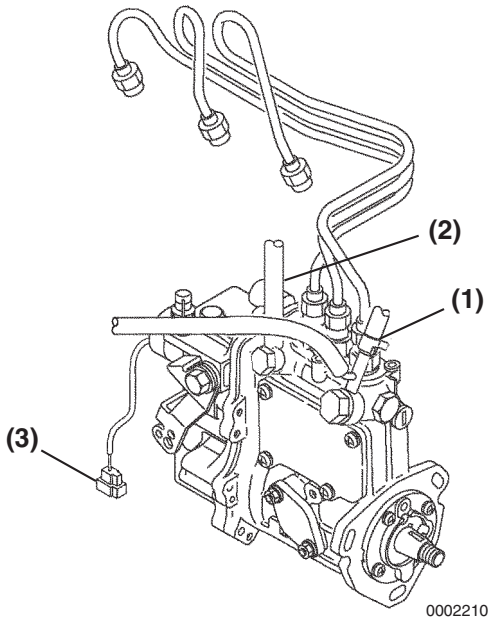

Figure 7-8

8. Remove the fuel supply line **(Figure 7-8, (2))** from the fitting on the fuel injection pump.
9. Plug or cap all openings to minimize leakage and prevent contamination.
10. Remove the throttle cable from the fuel injection pump.
11. Separate the stop solenoid wiring connector **(Figure 7-8, (3))**.
12. Remove the lube oil line **(Figure 7-9, (1))** from the fuel injection pump and cylinder block.

IMPORTANT

Take care to not damage or bend the lube oil line.

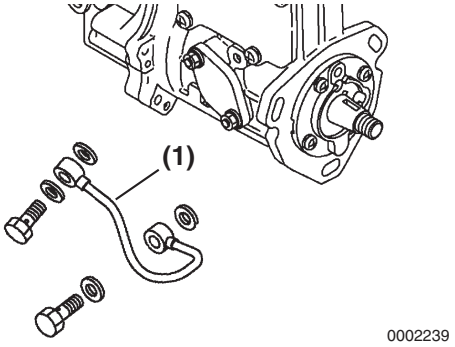

Figure 7-9

13. Remove the fuel injection pump drive gear access cover **(Figure 7-10, (1))** from the gear case cover **(Figure 7-10, (2))**.

Note: The cover is secured with an adhesive sealant. Use a gasket scraper to separate the cover from the gear case cover.

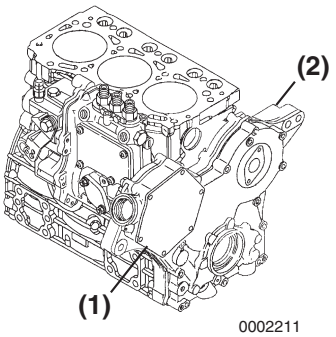

Figure 7-10

14. To aid in reassembly, make reference marks **(Figure 7-11, (1))** on the drive gear and idler gear.

CAUTION

After marking the position of the pump drive gear, do not rotate the engine crankshaft. Rotating the crankshaft will cause the fuel injection pump to become misaligned.

0000048en

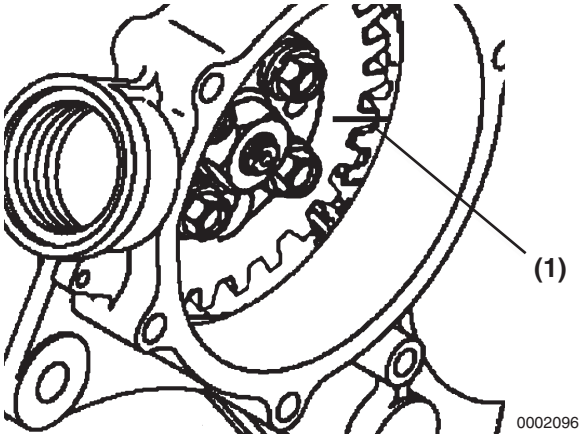

Figure 7-11

CAUTION

Do not loosen or remove the four bolts retaining the fuel injection pump drive gear to the fuel injection pump hub. Do not disassemble the fuel injection pump drive gear from the hub. Correct fuel injection timing will be very difficult or impossible to achieve.

0000031en

15. Do not loosen or remove the four bolts **(Figure 7-12, (3))** holding the pump drive gear to the hub. Only remove the single drive gear nut **(Figure 7-12, (1))** and washer **(Figure 7-12, (2))**, leaving the hub attached to the gear.

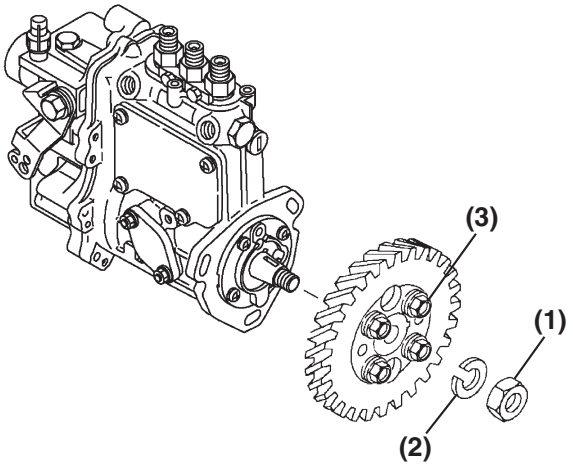

Figure 7-12

16. Hold the gear train stationary using a large socket wrench on the crankshaft pulley bolt. Loosen the fuel injection pump drive gear retaining nut **(Figure 7-12, (1))** and turn it out to the end of the fuel injection pump shaft.
17. Remove the injection pump drive gear and hub from the injection pump drive shaft as an assembly using an appropriate gear puller **(Figure 7-13)**.

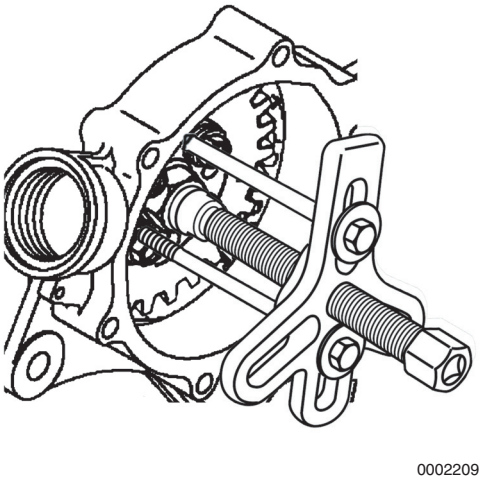

Figure 7-13

Note: The injection pump drive gear can be removed from the gear case; however, it is best to let it remain in the gear case.

18. Once the fuel injection pump drive gear and hub assembly have “popped” loose from the tapered fuel injection pump drive shaft, carefully remove the drive gear nut **(Figure 7-14, (1))** and lock washer **(Figure 7-14, (2))**.

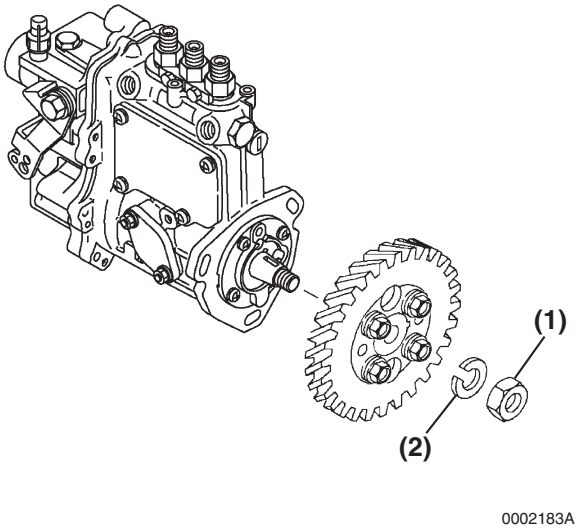

Figure 7-14

19. Locate the mark **(Figure 7-15, (1))** stamped into the upper outside mounting boss of the fuel injection pump. Highlight this mark and make a corresponding mark on the gear case or front plate.

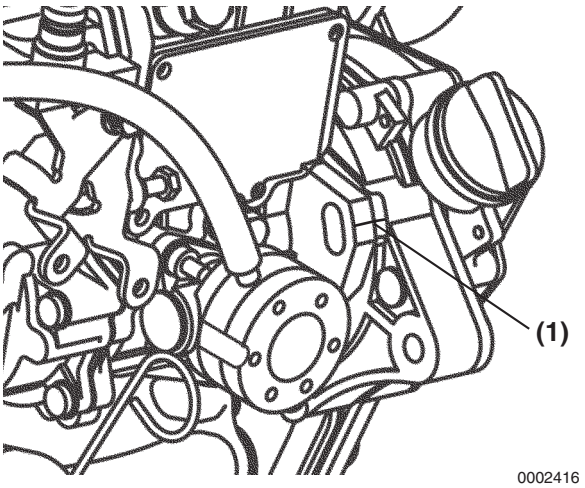

Figure 7-15

20. Remove the three nuts fastening the fuel injection pump to the gear case. Remove the fuel injection pump. Leave the fuel injection pump drive gear in the gear case and meshed with the idler gear.

CAUTION

Do not rotate the crankshaft with the injection pump removed.

0000083en

21. If the fuel injection pump requires servicing, it must be sent to an authorized Yanmar FIE repair facility for repair and calibration, or replaced with a new fuel injection pump.

CAUTION

- **NEVER remove or attempt to remove the tamper-proof devices from the full-load fuel adjusting screw or the high-speed throttle limit screw on the fuel injection pump and governor assembly. These adjustments have been made at the factory to meet all applicable emissions regulations and then sealed.**
- **NEVER attempt to make any adjustments to these sealed adjustment screws. If adjustments are required, they can be made only by a qualified fuel injection shop that will ensure the injection pump continues to meet all applicable emissions regulations and then replace the tamper-proof seals.**
- **Tampering with or removing these devices may void the “Yanmar Limited Warranty.”**

0000146en

Installation of Fuel Injection Pump

1. Ensure the fuel injection pump drive gear is aligned with the idler gear using the reference marks made earlier **(Figure 7-16, (1))**.

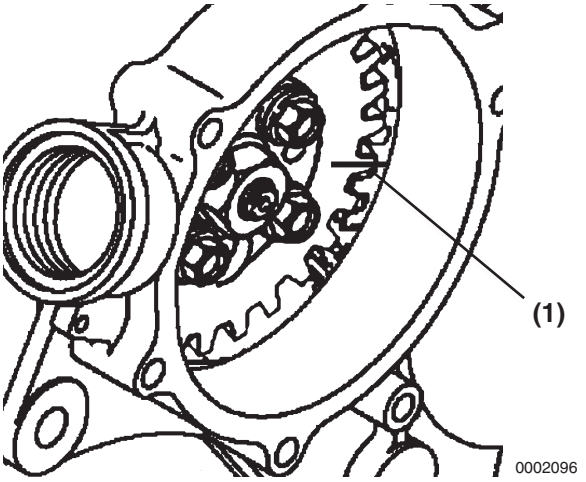

Figure 7-16

2. If installing the fuel injection pump on an engine with the front gear case cover removed, the fuel injection pump drive gear can be aligned with the idler gear by aligning the stamped marks **(Figure 7-17, (A, B, C))** on the fuel injection pump drive gear, idler gear, and crankshaft drive gear. Ensure all three timing marks **(A, B, C)** are aligned.

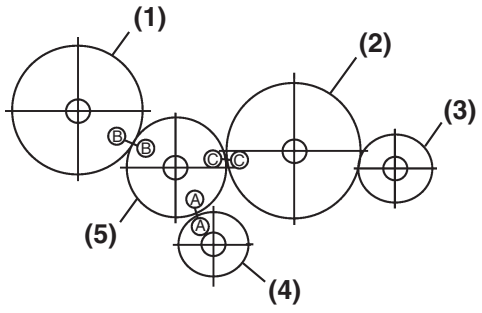

1 – Fuel Injection Pump Drive Gear
2 – Camshaft Drive Gear
3 – Optional Accessory Drive Gear
4 – Crankshaft Drive Gear
5 – Idler Gear

Figure 7-17

3. Install a new O-ring on the fuel injection pump mounting flange. Apply some grease to the O-ring to hold it in place during the installation of the fuel injection pump.

Note: Ensure the tapered surface of the fuel injection pump shaft is clean and dry.

4. Align the key on the fuel injection pump shaft with the keyway in the fuel injection pump drive gear hub. Reinstall the fuel injection pump into the fuel injection pump drive gear and gear housing. Install the pump retaining nuts finger-tight.
5. Reinstall the fuel injection pump drive gear lock washer **(Figure 7-18, (2))** and nut **(Figure 7-18, (1))**. Do not lubricate threads of the nut or shaft. Hold the crankshaft pulley bolt with a socket wrench and tighten the drive gear nut to the specified torque. *See Special Torque Chart on page 7-7.*

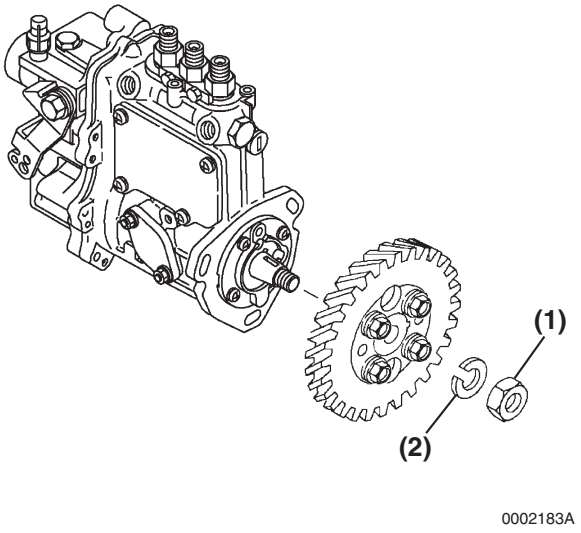

Figure 7-18

6. Align the reference marks **(Figure 7-19, (1))** made during disassembly on both the fuel injection pump mounting flange and gear case. If installing a replacement fuel injection pump, align the manufacturer-applied mark on the pump mounting flange with the mark made on the timing gear cover.

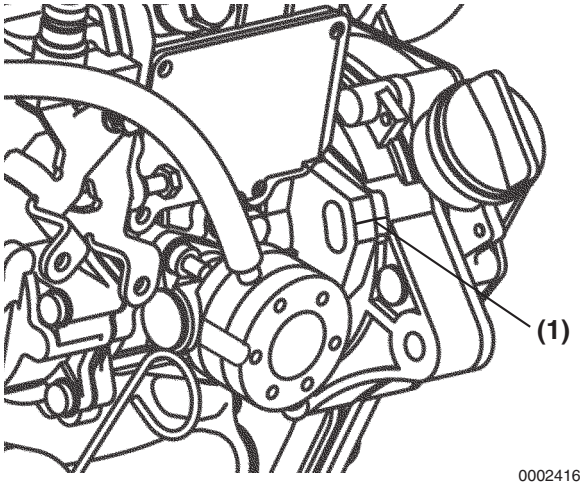

Figure 7-19

7. Tighten the fuel injection pump retaining nuts to specification. *See Special Torque Chart on page 7-7.*
8. Reconnect the fuel supply and return lines to the fuel injection pump.
9. Reconnect the throttle linkage and stop solenoid connector.
10. If installing a new or recalibrated fuel injection pump, check the fuel injection timing before completing the installation of the fuel injection pump. *See Checking and Adjusting Fuel Injection Timing on page 7-19.*

Note: While it is not required to check the injection timing when reinstalling the original fuel injection pump, it is recommended that it be done.

11. Reinstall the lube oil line **(Figure 7-20, (1))**.

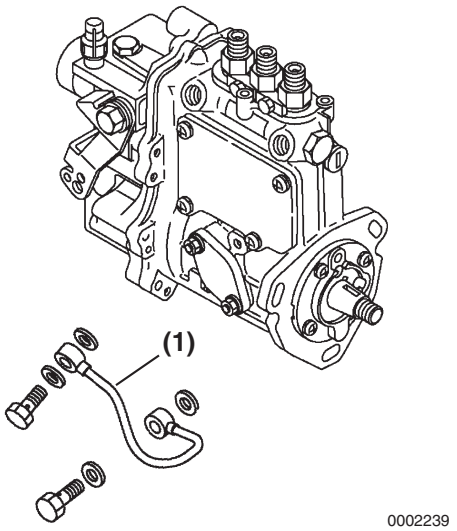

Figure 7-20

12. Apply ThreeBond Liquid Gasket No. 1212, Yanmar Part No. 977770-01212, or equivalent sealant to the sealing surface of the fuel injection pump drive gear access cover. Reinstall the cover on the front of the gear case and tighten the bolts.
13. Reinstall the fuel injection high-pressure lines. *See Installation of High-Pressure Fuel Injection Lines on page 7-12.*

IMPORTANT

When installing a new or repaired fuel injection pump, add 5 - 7 oz (150 - 200 cc) of new, clean engine oil to the fuel injection pump at the fill plug located in the upper outside section of the governor housing.

14. Reinstall the coolant pump V-pulley **(Figure 7-21, (4))**, spacer **(Figure 7-21, (3))** (if equipped) and engine cooling fan **(Figure 7-21, (2))**.

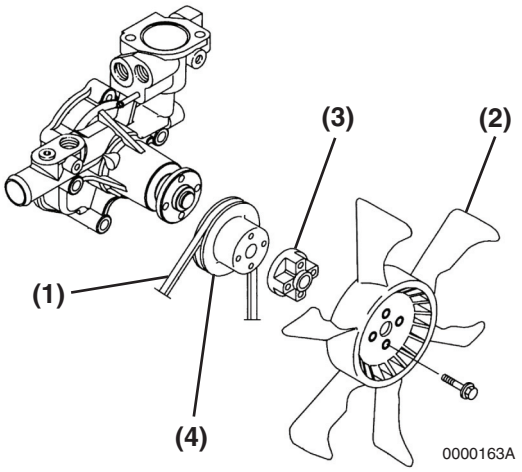

Figure 7-21

15. Reinstall the cooling fan V-belt **(Figure 7-21, (1))**. Adjust as described in *Check and Adjust Cooling Fan V-Belt on page 5-27.*
16. Reinstall the cooling fan guard (if equipped).
17. Prime the fuel system. *See Priming the Fuel System on page 4-12.*
18. Operate the engine and check for fuel and lube oil leaks.

CHECKING AND ADJUSTING FUEL INJECTION TIMING

Note: The following procedure is performed on the No. 1 cylinder. While checking and adjusting the timing on only No. 1 cylinder is usually sufficient, the same procedure can be performed on any or all cylinders.

Checking Fuel Injection Timing

Note: Some fuel may drain from the fuel injection pump during this process. Make provisions to contain and dispose of any such spillage.

1. Ensure the fuel injection pump is primed with fuel. *See Priming the Fuel System on page 4-12.*
2. Clean the area around the fuel injection pump.

Note: The stop solenoid must be removed to allow fuel to flow through the fuel injection pump.

3. Remove two screws **(Figure 7-22, (1))**. Remove the stop solenoid **(Figure 7-22, (2))** and O-ring **(Figure 7-22, (3))**.

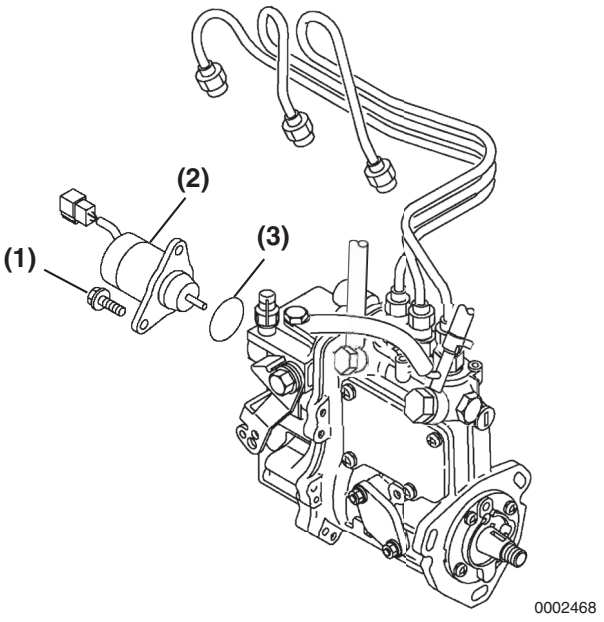

Figure 7-22

4. Set the throttle to the HIGH-IDLE position.
5. Using a wrench on the crankshaft pulley bolt, rotate the crankshaft in a clockwise direction while looking through the flywheel inspection port **(Figure 7-23, (1))**. Rotate the crankshaft until the injection timing marks on the flywheel are visible for No. 1 cylinder.

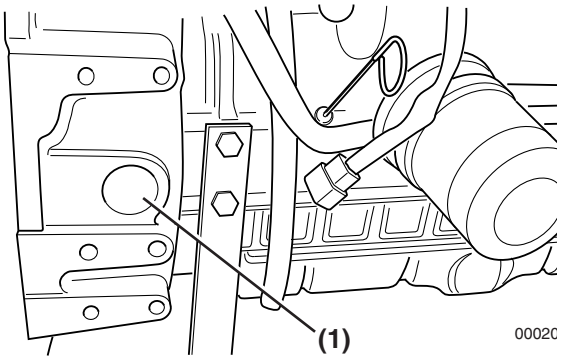

Figure 7-23

6. Typical flywheel markings are as shown in **(Figure 7-24)**.

Note: A typical flywheel will have multiple timing grids depending on the number of cylinders. Any grid and its corresponding cylinder can be used to check the fuel injection timing.

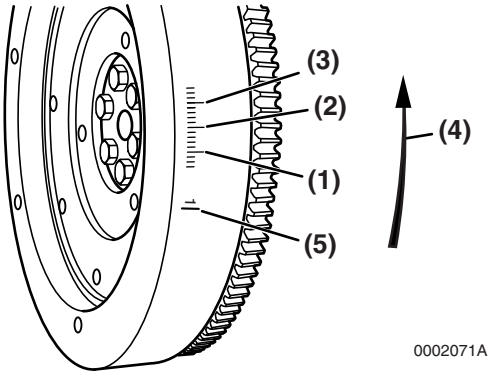

1 – 15° BTDC (Before Top Dead Center)
2 – 20° BTDC
3 – 25° BTDC
4 – Direction of Rotation
5 – TDC (Top Dead Center)

Figure 7-24

7. The flywheel shown in **(Figure 7-24)** is for a Yanmar “Standard Specification” IDI engine. Flywheels used on some “OEM Specific” IDI engines may be marked differently. You should contact that specific OEM for information on the identification of the timing marks.

Note: The TDC (Top Dead Center) mark can be identified by the cylinder numbers stamped near the TDC mark **(Figure 7-24, (5))** on the flywheel.

8. If you are uncertain as to the timing degree designation of the timing marks on the flywheel timing grid, you can determine the timing degree designation by measuring the timing grid.
   - First measure the distance between two of the “longer” marks on the timing grid. (They are 5° apart.) Then measure the distance from the TDC mark to the first “longer” mark on the timing grid. Divide that measurement by the distance between the two “longer” marks. The resulting answer will tell you how many degrees there are between the TDC mark and the first “longer” mark.

- EXAMPLE: If the distance between the two “longer” marks is approximately 2.0 cm and the distance from the TDC mark is approximately 4.0 cm, the answer is approximately 2. This indicates there is 10° (2 x 5°) between the TDC mark and the first “longer” mark on the timing grid. That means the first “longer” mark on the timing grid indicates 10° BTDC, the second “longer” mark indicates 15° BTDC and the third timing mark indicates 20°. If the answer is 3, that indicates there is 15° (3 x 15°) between the TDC mark and the first “longer” mark and that the first “longer” mark indicates 15° BTDC with the second and third “longer” marks indicating 20° BTDC and 25° BTDC respectively.

9. Highlight the timing reference mark on the flywheel housing **(Figure 7-25, (2))** or engine back plate **(Figure 7-26, (2))**. Highlight the TDC (Top Dead Center) mark **(Figure 7-25, (1))**, **(Figure 7-26, (1))** on the flywheel.

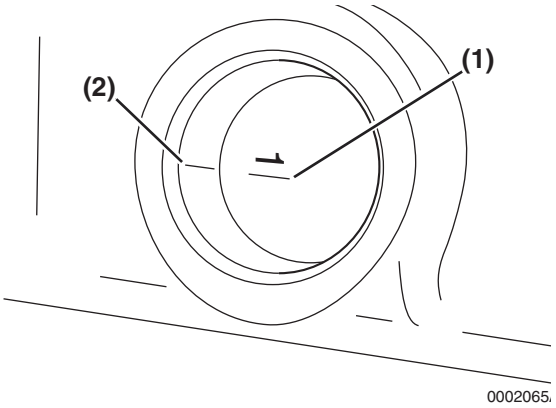

Figure 7-25

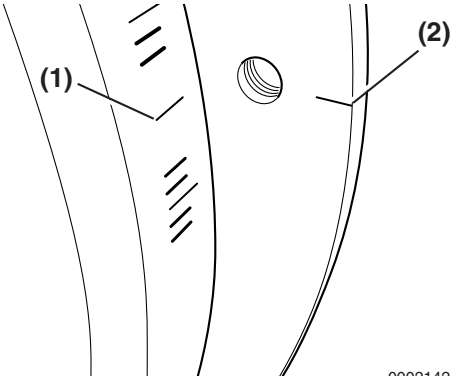

Figure 7-26

10. Highlight the target timing mark **(Figure 7-26, (1)), (Figure 7-27, (1))** on the flywheel timing grid as determined in the *Fuel Injection Timing Chart* below.

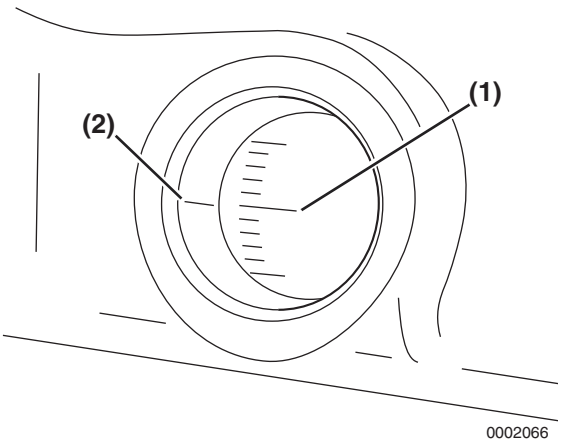

Figure 7-27

Fuel Injection Timing Chart

Model		VH
Engine Speed (rpm)		3300
3TNV72	Injection Timing BTDC ±1°	19°

11. Remove all high-pressure fuel injection lines. *See Removal of High-Pressure Fuel Injection Lines on page 7-11.*

12. Turn on all fuel supply valves.

Note: As the injection pump injects fuel to a cylinder only once every two engine revolutions, it may be necessary to rotate the crankshaft twice to see fuel being pumped from the timing tool or delivery valve of the cylinder you are using to check injection timing.

13. Install the “spill-timing” tool **(Figure 7-28, (1))** onto the delivery valve for the cylinder being checked. *See Measuring Instruments on page 7-8.*

Note: If a timing tool is not available, timing can be checked by watching the fuel in the delivery valve itself.

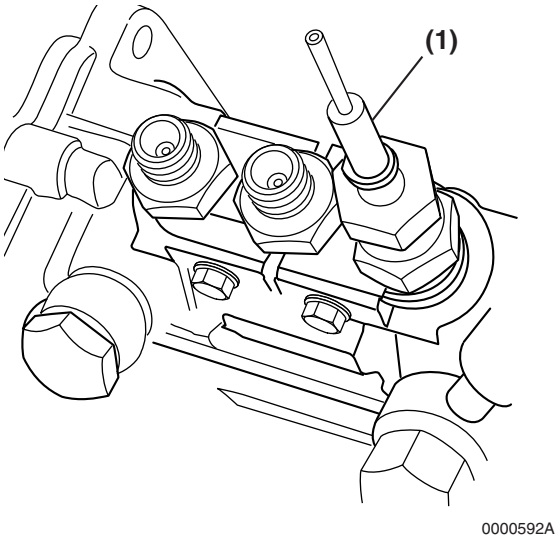

Figure 7-28

Note: The following references to the direction of rotation are made facing the cooling fan end of the engine and are adjusted by turning the crankshaft.

14. Slowly rotate the crankshaft clockwise using a wrench on the crankshaft pulley bolt until fuel is pumped from the nozzle of the “spill-timing” tool or delivery valve.
15. Slowly rotate the crankshaft clockwise approximately two more revolutions until the timing grid on the flywheel (for the cylinder being checked) is at approximately 30° BTDC.

Note: The fuel injection pump injects fuel to a cylinder only once every two engine revolutions.

16. “Flick” the nozzle of the timing tool with a finger to remove bubbles and establish a fuel level of approximately 1/2 the height of the nozzle.
17. Very slowly rotate the crankshaft clockwise until the fuel level in the nozzle of the “spill timing” tool, or in the delivery valve, just begins to move. Immediately stop rotating the crankshaft.
18. Check the position of the flywheel target timing mark **(Figure 7-27, (1))** on the flywheel grid in relation to the timing reference mark **(Figure 7-27, (2))** on the flywheel housing or back plate. If the two marks are aligned, the fuel injection timing is correct. If the marks do not align, the fuel injection timing must be adjusted. *See Adjusting Fuel Injection Timing on page 7-23.*
19. Repeat Steps 13-17 two or three times to verify timing.
20. Remove the “spill-timing” tool.
21. Reinstall the shut-off solenoid.
22. Reinstall the high-pressure fuel injection lines. *See Installation of High-Pressure Fuel Injection Lines on page 7-12.*
23. Replace the flywheel inspection port cover.
24. Prime the fuel system. Operate the engine and check for leaks.

Adjusting Fuel Injection Timing

If the timing marks did not align when performing the *Checking Fuel Injection Timing on page 7-19*, the following steps must be performed to properly time the engine.

1. Leave the “spill-timing” tool installed in the fuel injection pump.
2. Determine if the timing is “advanced” or “retarded” by comparing the position of the target timing mark on the flywheel grid **(Figure 7-29, (1))** with the timing mark on the flywheel housing or back plate **(Figure 7-29, (2))**.

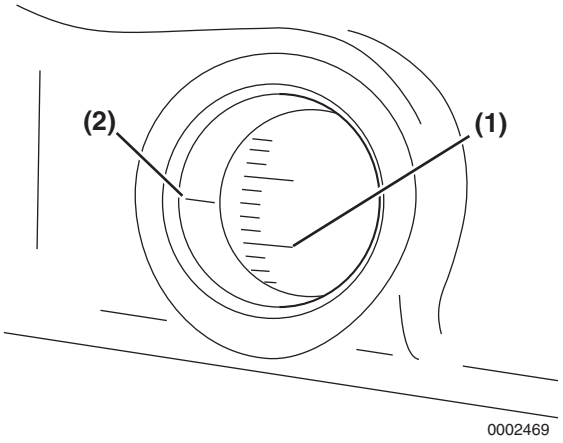

Figure 7-29

3. Loosen the nuts fastening the fuel injection pump to the gear case.
4. If the injection timing was less than the target timing, the injection timing is “retarded” and will need to be “advanced.”

   To “advance” the injection timing: Rotate the top of the fuel injection pump away from the engine.

   If the injection timing was greater than the target timing, the injection timing is “advanced” and will need to be “retarded.”

   To “retard” the injection timing: Rotate the top of the fuel injection pump toward the engine.
5. Adjust the position of the fuel injection pump and tighten the fuel injection pump mounting nuts.
6. Recheck the fuel injection timing. Repeat the fuel injection timing and adjustment procedures until the timing is correct. *See Checking Fuel Injection Timing on page 7-19 and repeat steps 3 - 6.*
7. Remove the “spill-timing” tool.
8. Reinstall the shut-off solenoid.
9. Reinstall the high-pressure fuel injection lines. *See Installation of High-Pressure Fuel Injection Lines on page 7-12.*
10. Replace the flywheel inspection port cover.
11. Prime the fuel system. Operate the engine and check for leaks.

FUEL INJECTORS

Removal of Fuel Injectors

1. Close any fuel valves in the fuel supply line.
2. Clean the area around the fuel injection pump and fuel injectors to keep contaminants from entering the engine or fuel system.
3. Remove the high-pressure fuel injection lines as an assembly. *See Removal of High-Pressure Fuel Injection Lines on page 7-11.*
4. Remove nut **(Figure 7-30, (1))**. Remove the fuel return line **(Figure 7-30, (2))** and copper washer **(Figure 7-30, (3))** from the fuel injectors. *See Removal of Fuel Return Line on page 7-12.*

Note: The fuel injectors used on IDI engines screw into the cylinder head.

5. Remove the fuel injectors **(Figure 7-30, (4))**.

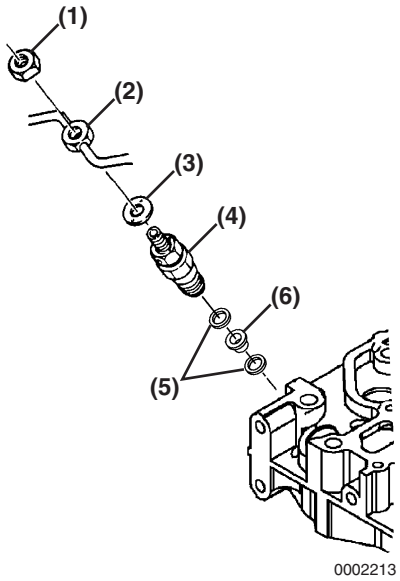

Figure 7-30

6. Remove the injector nozzle gaskets **(Figure 7-30, (5))** and protector **(Figure 7-30, (6))** from the cylinder head.

Testing of Fuel Injectors

CAUTION

Never use a steel wire brush to clean fuel injectors. Damage to the nozzle and other components is likely to result.

0000172en

1. Thoroughly clean the fuel injector nozzle using clean diesel fuel and a brass wire brush.
2. Visually inspect the fuel injectors and nozzle protectors for deposits or damage. Clean, repair or replace as necessary.

Note: Test the fuel injector using an injection nozzle tester. Operate the tester following the information provided by the tester manufacturer. Use clean, filtered fuel or FIE calibration fluid for the test.

3. Using the correct adapter, connect a fuel injector to a nozzle tester. Aim the fuel injector into a suitable container to catch the fuel spray **(Figure 7-31)**.

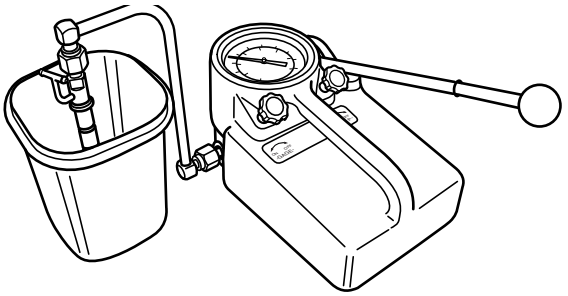

Figure 7-31

⚠ WARNING



HIGH-PRESSURE HAZARD!

- **Avoid skin contact with the high-pressure diesel fuel spray caused by a fuel system leak such as a broken fuel injection line. High-pressure fuel can penetrate your skin and result in serious injury. If you are exposed to high-pressure fuel spray, obtain prompt medical treatment.**
- **NEVER check for a fuel leak with your hands. ALWAYS use a piece of wood or cardboard. Have your authorized Yanmar industrial engine dealer or distributor repair the damage.**
- **Failure to comply could result in death or serious injury.**

0000008en

⚠ WARNING



To prevent possible eye injury, always wear SAFETY GLASSES while servicing the engine.

0000013en

4. Pump the operating lever of the tester slowly, observing the pressure reading at the point where the fuel injector begins spraying fuel. *See Test and Adjustment Specifications on page 7-7 for correct pressure readings.*

Note: Opening pressure of a new fuel injector will be approximately 72.5 psi (0.5 MPa; 5 kgf/cm^2) higher than one that has been operated for five hours or longer.

5. Pump the operating lever slowly to hold the pressure steady at a point just below the opening pressure and hold that pressure for five seconds. Observe the injector to see that it is sealing properly and is not “dripping.” If fuel leaks from the return line fitting, check that the nozzle case nut is tight. Service or replace the injector if fuel continues to leak from either the return line fitting or nozzle.
6. Pump the operating lever more rapidly to repeatedly “pop” the injector and observe the spray pattern. The pattern should be a very fine uniform spray. If dripping or an uneven pattern is seen, service or replace the injector. *See Fuel Injector Test Results on page 7-26*.

Fuel Injector Test Results

	A	B	C	D	E
Injection Pattern	 0001742	 0001743	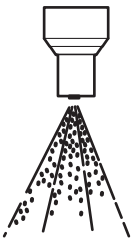 0001744		
Pressure Gauge Reading	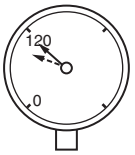 0001747 Gauge needle fluctuates around the valve opening pressure.	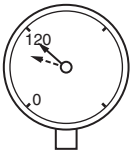 0001748 Gauge needle fluctuates around the valve opening pressure.	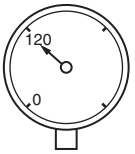 0001749 Gauge needle stays at a position near the valve opening pressure.	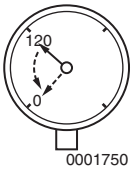 0001750 Although the gauge needle reaches the valve opening pressure, the pressure drop is large.	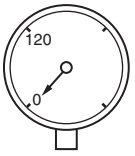 0001751 Pressure does not increase even when the tester lever is operated.
Atomization Pattern	5°-10° cone and roughly uniform.	Atomization is excessively one-sided.	Although atomized (burner like shape), the needle does not pulsate.	Bar shape with excessive after drops.	Drops.
Possible Cause	(Normal, injector is good)	Normally caused by carbon contamination of the nozzle tip. Sometimes caused by flaws in or damage to the needle tip.	Caused by excessive carbon contamination of the nozzle tip. Sometimes caused by internal contamination.	Damage to the seat. Contamination of seat by fine foreign particles. Excessively worn seat.	Sticking of needle. Excessively damaged or worn seat. Contamination of seat by foreign matter. Damaged or broken internal parts or nozzle case nut.

Note: If the fuel injector fails any tests, it should be serviced or replaced as necessary. If the pressure is outside specified limits, adjust the pressure. *See Adjusting Fuel Injector Pressure on page 7-28.*

Disassembly and Inspection of Fuel Injectors

CAUTION

Never use a steel wire brush to clean fuel injectors. Damage to the nozzle and other components is likely to result.

0000172en

1. Clean carbon from used injectors using clean diesel fuel. Hardened deposits or varnish can be cleaned using a brass wire brush.

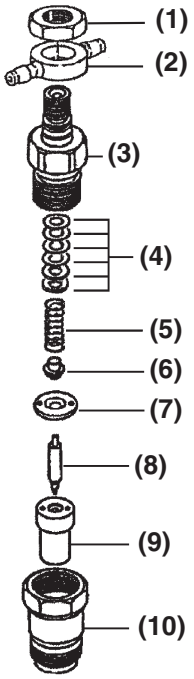

0002214

1 – Return Fuel Fitting Nut
2 – Return Fuel Fitting
3 – Injector Body
4 – Pressure Adjusting Shims
5 – Spring
6 – Spring Seat
7 – Valve Stop Spacer
8 – Nozzle Valve
9 – Nozzle Body
10 – Nozzle Case Nut

Figure 7-32

2. Place the fuel injector in a soft-jawed vise with the nozzle pointing up.
3. Remove the nozzle case nut.
4. Carefully remove the injector from the vise.
5. Turn the injector over and remove the nozzle body, nozzle valve, valve stop spacer, nozzle spring seat, nozzle spring, and shims.
6. Inspect the sealing surfaces **(Figure 7-33, (2))** between the valve stop spacer and nozzle body for nicks or scratches. Check the contact area between the valve stop spacer and the nozzle valve **(Figure 7-33, (1))** for scoring or pitting. Use a magnifying glass to inspect.

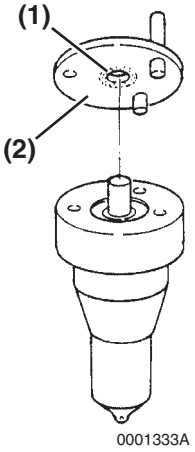

0001333A

Figure 7-33

7. Perform a nozzle valve slide test:
   (a) Wash nozzle body and valve in clean diesel fuel.
   (b) While holding the nozzle body vertical, pull the nozzle valve about 2/3 of the way out **(Figure 7-34)**.
   (c) Release the valve. It should fall smoothly to its seat by its own weight.

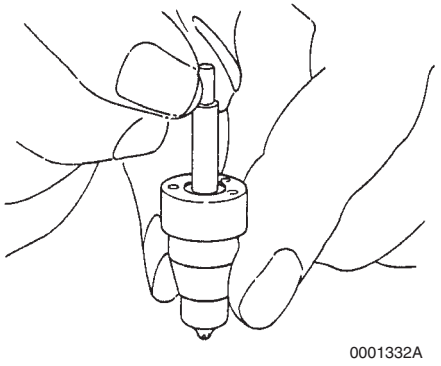

Figure 7-34

Replace the fuel injector assembly if it fails any inspection.

Adjusting Fuel Injector Pressure

The fuel injectors open when pressure reaches a predetermined pressure threshold. They close when the pressure is reduced below that threshold. The pressure threshold can be adjusted by adding or removing shims **(Figure 7-35, (4))**.

Fuel Injector Shim Kit Yanmar Part No. 129901-53800 (Includes one each of the following shims)	
129901-53810	0.0039 in. (0.10 mm)
129901-53820	0.0079 in. (0.20 mm)
129901-53830	0.0118 in. (0.30 mm)
129901-53840	0.0157 in. (0.40 mm)
129901-53850	0.0197 in. (0.50 mm)
129901-53860	0.0205 in. (0.52 mm)
129901-53870	0.0213 in. (0.54 mm)
129901-53880	0.0220 in. (0.56 mm)
129901-53890	0.0228 in. (0.58 mm)
129901-53900	0.0315 in. (0.80 mm)

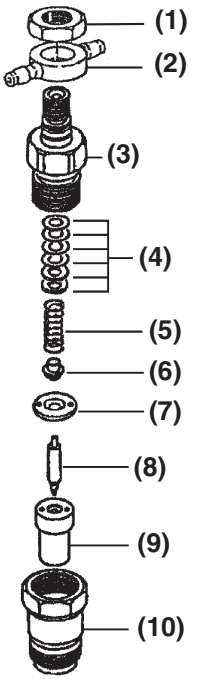

1 – Return Fuel Fitting Nut
2 – Fuel Return Fitting
3 – Injector Body
4 – Pressure Adjusting Shims
5 – Spring
6 – Spring Seat
7 – Valve Stop Spacer
8 – Nozzle Valve
9 – Nozzle Body
10 – Nozzle Case Nut

Figure 7-35

The injection pressure will change by approximately 100 - 142 psi (0.69 - 0.98 MPa; 7 - 10 kgf/cm^2) for every 0.004 in. (0.1 mm) shim thickness.

See the parts catalog for available shims.

1. Disassemble the fuel injector assembly. *See Disassembly and Inspection of Fuel Injectors on page 7-27*.
2. Remove or add adjusting shims as needed.
3. Reassemble the fuel injector assembly. *See Reassembly of Fuel Injectors on page 7-29*.

4. Retest the fuel injector. *See Testing of Fuel Injectors on page 7-24*. If the injector cannot be adjusted to the appropriate pressure, discard the fuel injector.

Reassembly of Fuel Injectors

1. Secure the injector in a soft-jawed vise with the nozzle end up.
2. Reinstall the shims, nozzle spring, nozzle spring seat, valve stop spacer, nozzle valve, and nozzle body.
3. Reinstall the nozzle case nut. Tighten it to specification.

Installation of the Fuel Injectors

1. Insert the nozzle gaskets **(Figure 7-36, (5))** and nozzle protector **(Figure 7-36, (6))** in the cylinder head.
2. Reinstall the fuel injector **(Figure 7-36, (4))** in the cylinder head and tighten to specification.
3. Reinstall new copper washers **(Figure 7-36, (3))**, high-pressure and return fuel lines **(Figure 7-36, (2))**. *See Installation of High-Pressure Fuel Injection Lines on page 7-12 and Installation of Fuel Return Line on page 7-13.* Tighten fuel line nuts **(Figure 7-36, (1))** to specifications.
4. Prime the fuel system. *See Priming the Fuel System on page 4-12*.
5. Operate the engine and check for fuel leaks.

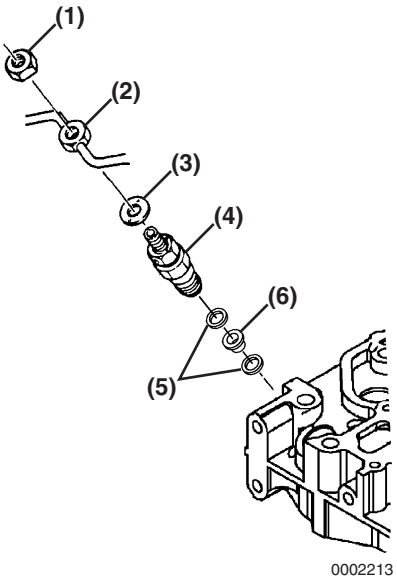

Figure 7-36

This Page Intentionally Left Blank

Section 8

COOLING SYSTEM

Page

Before You Begin Servicing 8-3
Introduction 8-5
Cooling System Diagram 8-5
Engine Coolant Pump Components 8-6
Engine Coolant System Check 8-7
Engine Coolant Pump 8-7
- Disassembly of Engine Coolant Pump 8-7
- Cleaning and Inspection 8-8
- Reassembly of Engine Coolant Pump 8-9

This Page Intentionally Left Blank

BEFORE YOU BEGIN SERVICING

DANGER



SCALD HAZARD!

- NEVER remove the radiator cap if the engine is hot. Steam and hot engine coolant will spurt out and seriously burn you. Allow the engine to cool down before you attempt to remove the radiator cap.
- Tighten the radiator cap securely after you check the radiator. Steam can spurt out during engine operation if the cap is loose.
- ALWAYS check the level of the engine coolant by observing the reserve tank.
- Failure to comply will result in death or serious injury.

0000002en

WARNING



BURN HAZARD!

- Wait until the engine cools before you drain the engine coolant. Hot engine coolant may splash and burn you.
- Failure to comply could result in death or serious injury.

0000016en

WARNING



ENTANGLEMENT HAZARD!

- Stop the engine before you begin to service it.
- NEVER leave the key in the key switch when you are servicing the engine. Someone may accidentally start the engine and not realize you are servicing it. This could result in a serious injury.
- If you must service the engine while it is operating, remove all jewelry, tie back long hair, and keep your hands, other body parts and clothing away from moving / rotating parts.
- Failure to comply could result in death or serious injury.

0000010en

WARNING



FUME / BURN HAZARD!

- Always read and follow safety related precautions found on containers of hazardous substances like parts cleaners, primers, sealants and sealant removers.
- Failure to comply could result in death or serious injury.

0000014en

⚠ WARNING



BURN HAZARD!

- If you must drain the engine oil while it is still hot, stay clear of the hot engine oil to avoid being burned.
- ALWAYS wear eye protection.
- Failure to comply could result in death or serious injury.

0000011en

⚠ CAUTION



FLYING OBJECT HAZARD!

- ALWAYS wear eye protection when servicing the engine and when using compressed air or high-pressure water. Dust, flying debris, compressed air, pressurized water or steam may injure your eyes.
- Failure to comply may result in minor or moderate injury.

0000003en

CAUTION

If the engine coolant pump must be replaced, replace the engine coolant pump as an assembly only. Do not attempt to repair the engine coolant pump or replace individual components.

0000041en

⚠ CAUTION

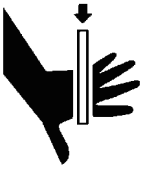

PINCH HAZARD!

Carefully rotate the alternator toward the cylinder block while loosening the V-belt. Failure to comply may result in minor or moderate injury.

0000014en

CAUTION

- Only use the engine coolant specified. Other engine coolants may affect warranty coverage, cause an internal buildup of rust and scale and / or shorten engine life.
- Prevent dirt and debris from contaminating the engine coolant. Carefully clean the radiator cap and the surrounding area before you remove the cap.
- NEVER mix different types of engine coolants. This may adversely affect the properties of the engine coolant.

0000006en

CAUTION

Use a new special O-ring between the engine coolant pump and the joint. Be sure to use the special O-ring for each engine model. Although the O-ring dimensions are the same as a commercially available O-ring, the material is different.

0000042en

INTRODUCTION

This section of the *Service Manual* describes the procedures necessary to service the 3TNV72 engine coolant pump.

COOLING SYSTEM DIAGRAM

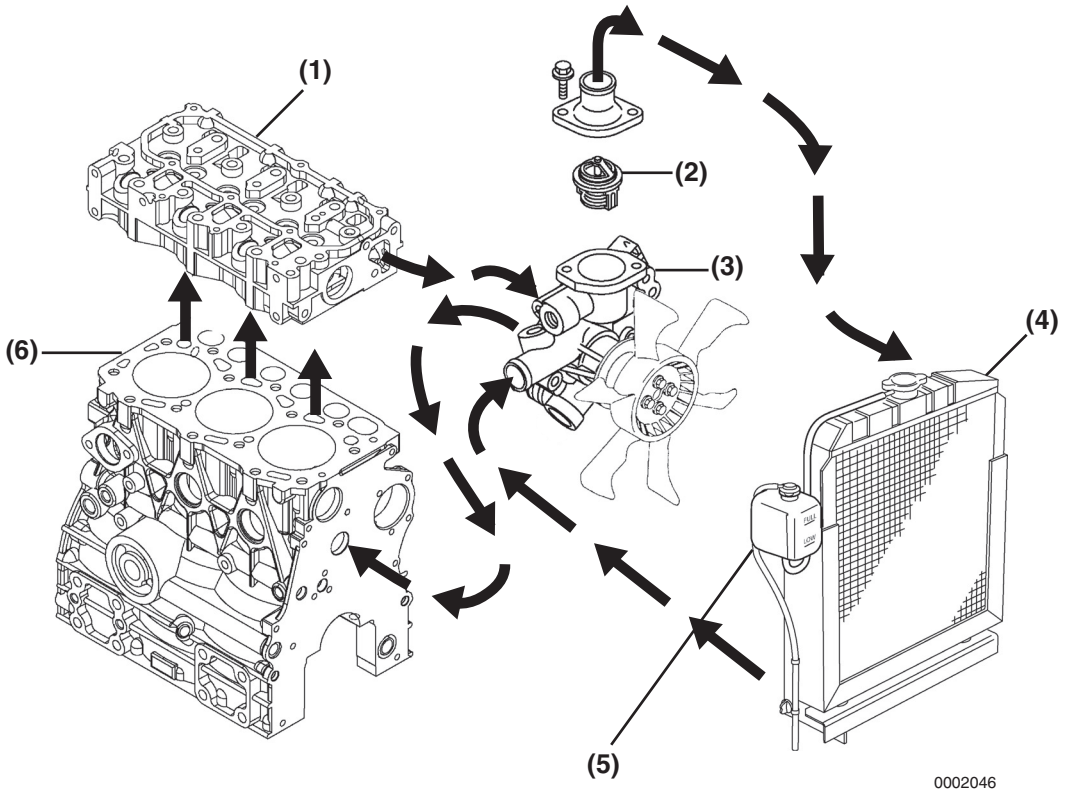

Figure 8-1

1 – Cylinder Head
2 – Thermostat
3 – Engine Coolant Pump
4 – Radiator
5 – Coolant Recovery Tank
6 – Cylinder Block

ENGINE COOLANT PUMP COMPONENTS

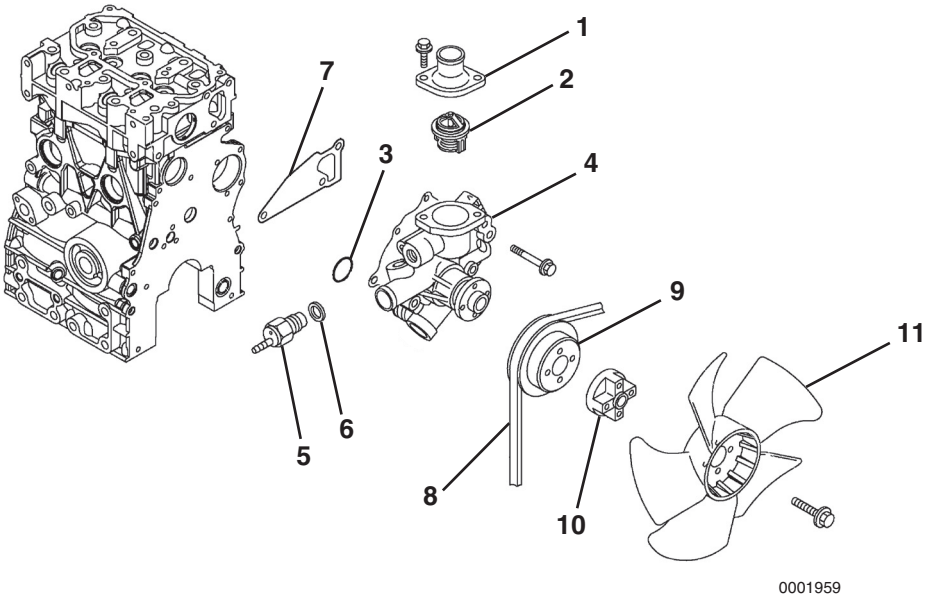

Figure 8-2

1 – Thermostat Cover
2 – Thermostat
3 – Special O-Ring
4 – Engine Coolant Pump
5 – Temperature Switch
6 – Gasket
7 – Engine Coolant Pump Gasket
8 – V-Belt
9 – Engine Coolant Pump V-Pulley
10 – Spacer
11 – Engine Coolant Fan

ENGINE COOLANT SYSTEM CHECK

Check the engine coolant system for leakage.

1. With the radiator properly filled, install a cooling system tester **(Figure 8-3, (1))**.

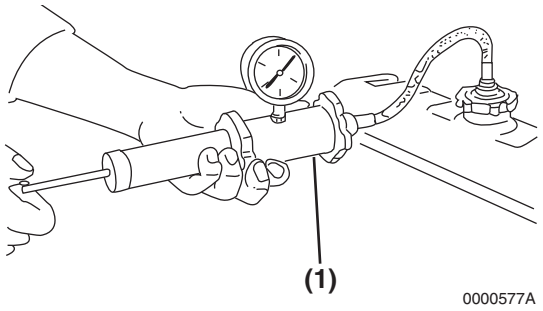

Figure 8-3

2. Apply 10.8 - 14.8 psi (75 - 105 kPa; 0.75 - 1.05 kgf/cm²) to the cooling system. If the pressure reading drops, the engine coolant system is leaking. Identify the source of the leak and repair.

ENGINE COOLANT PUMP

Disassembly of Engine Coolant Pump

Verify the condition of the engine coolant pump before disassembling it from the engine. Check the engine coolant pump shaft bearing for abnormal noise, sticking, excessive play and water leakage. Replace the coolant pump if any of these conditions are present.

CAUTION

If the engine coolant pump must be replaced, replace the engine coolant pump as an assembly only. Do not attempt to repair the engine coolant pump or replace individual components.

0000041en

1. Make sure the engine and engine coolant are not hot.
2. Before removing the engine coolant pump or thermostat, it will be necessary to drain the engine coolant. Drain the coolant into a clean container if the coolant is to be reused. Otherwise, properly dispose of the coolant.
   - Drain the coolant from the radiator. See steps 1 - 4 in *Drain, Flush and Refill Cooling System with New Coolant on page 5-33*.
3. Loosen the alternator mounting bolts. Loosen and remove the V-belt and rotate the alternator away from the engine and out of the way.

CAUTION

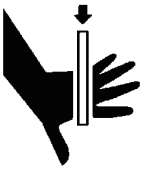

PINCH HAZARD!

Carefully rotate the alternator toward the cylinder block while loosening the V-belt. Failure to comply may result in minor or moderate injury.

0000014en

4. Remove the engine coolant fan guard (if equipped), engine coolant fan **(Figure 8-4, (1))**, spacer **(Figure 8-4, (2))** and engine coolant pump V-pulley **(Figure 8-4, (3))**.

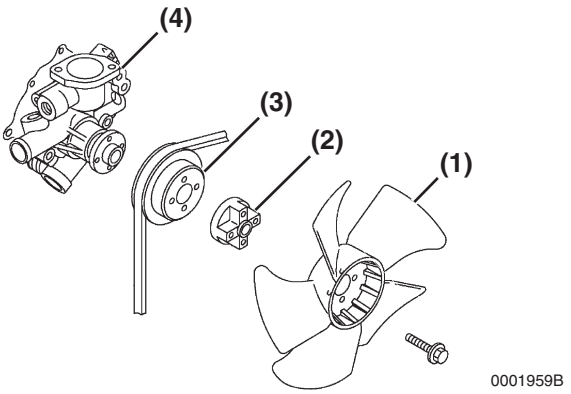

Figure 8-4

5. Disconnect the coolant hoses and the temperature switch lead wire from the engine coolant pump.

6. Remove the engine coolant pump **(Figure 8-4, (4))**. Discard the gasket.
7. Remove the thermostat cover **(Figure 8-5, (1))**.

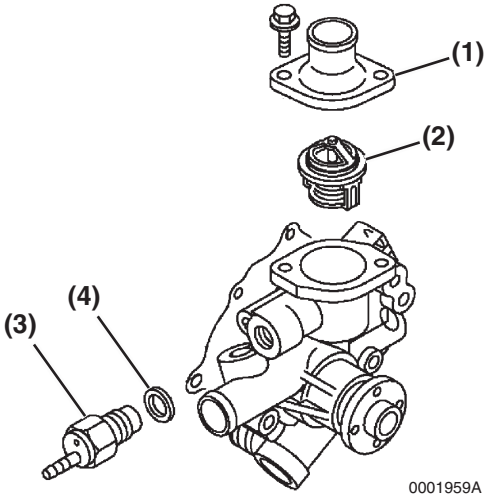

Figure 8-5

8. Remove the thermostat **(Figure 8-5, (2))**. Remove the temperature switch **(Figure 8-5, (3))** and gasket **(Figure 8-5, (4))**. Discard the gasket.

Cleaning and Inspection

Temperature Switch

1. Check for proper operation of the temperature switch. Connect a continuity light or ohmmeter to the temperature switch. Connect one lead to the terminal of the switch **(Figure 8-6, (1))** and the other lead to the metal portion of the switch **(Figure 8-6, (2))**.

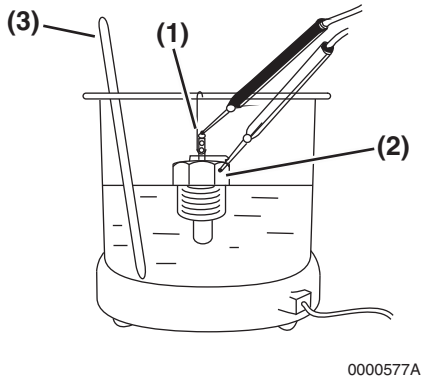

Figure 8-6

2. Place the temperature switch and an accurate thermometer **(Figure 8-6, (3))** in engine coolant.
3. Slowly increase temperature of the fluid using an external heat source.
4. The temperature switch is normal if the continuity light or ohmmeter indicates continuity when the fluid temperature reaches 225°F - 235°F (107°C - 113°C).

Thermostat

1. Check for proper operation of the thermostat. Place the thermostat **(Figure 8-7, (1))** and an accurate thermometer **(Figure 8-7, (2))** in warm water.

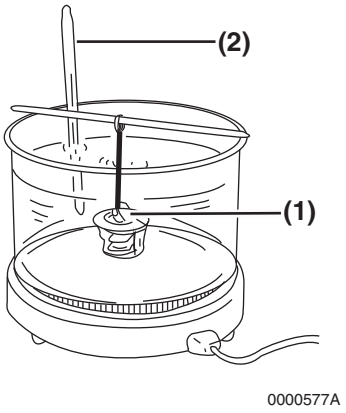

Figure 8-7

2. Slowly increase temperature of the water using an external heat source.
3. The thermostat is normal if it starts to open at the temperature value stamped on the flange of the thermostat, and fully opens as the temperature of the water is increased.

Radiator Cap

1. Check for proper operation of the radiator cap. Install the radiator cap **(Figure 8-8, (1))** on a cooling system tester.

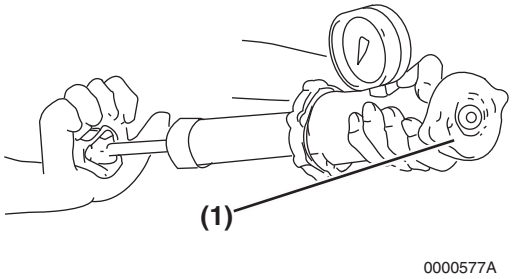

Figure 8-8

2. Apply 10.8 - 14.8 psi (75 - 105 kPa; 0.75 - 1.05 kgf/cm²) to the radiator cap. The radiator cap relief valve must open within the specified range.

Reassembly of Engine Coolant Pump

1. Reinstall the thermostat **(Figure 8-9, (1))**.

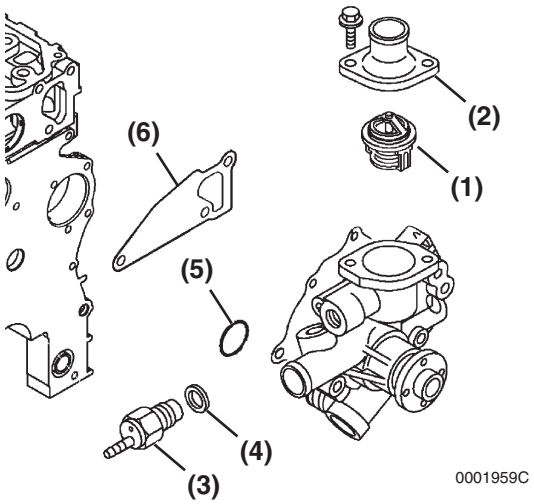

Figure 8-9

2. Reinstall the thermostat cover **(Figure 8-9, (2))**. Tighten the thermostat cover bolts.
3. Reinstall the temperature switch **(Figure 8-9, (3))** and a new gasket **(Figure 8-9, (4))**.
4. Position the engine coolant pump on the engine and install a new gasket **(Figure 8-9, (6))**. Use a new special O-ring **(Figure 8-9, (5))** on assembly between the engine coolant pump and the joint.

CAUTION

Use a new special O-ring between the engine coolant pump and the joint. Be sure to use the special O-ring for each engine model. Although the O-ring dimensions are the same as a commercially available O-ring, the material is different.

0000042en

5. Reinstall the engine coolant pump bolts. Tighten the bolts.
6. Inspect and reinstall the coolant hoses and the temperature switch lead wire.
7. Reinstall the engine coolant pump V-pulley **(Figure 8-10, (3))**, spacer **(Figure 8-10, (2))** engine coolant fan **(Figure 8-10, (1))** and engine coolant fan guard (if equipped).

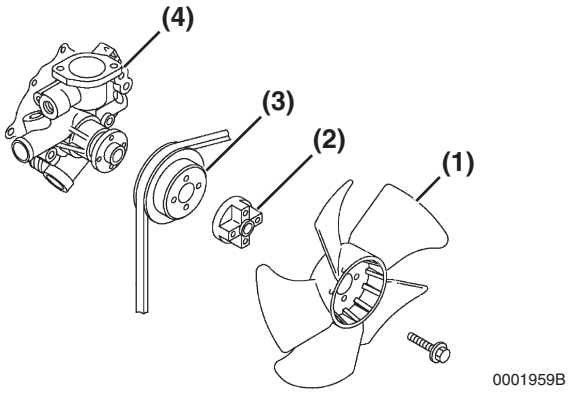

Figure 8-10

8. Inspect the condition of the V-belt. There must be clearance **(Figure 8-11, (1))** between the V-belt and the bottom of the pulley groove. If there is no clearance **(Figure 8-11, (2))** between the V-belt and the bottom of the pulley groove, replace the V-belt.

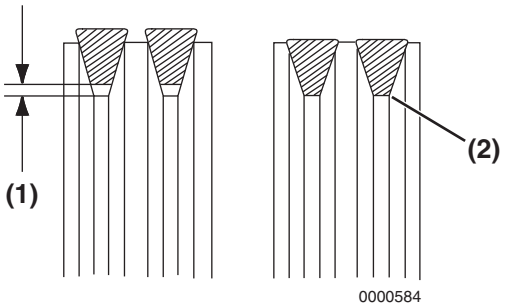

Figure 8-11

9. Reinstall the V-belt. Tighten the V-belt to the proper tension. *See Check and Adjust Cooling Fan V-Belt on page 5-27.*
10. Reinstall and tighten the drain plug or close the drain cock in the radiator. Reinstall and tighten the engine block drain plug or reconnect the coolant hose at the oil cooler.
11. Fill radiator and engine with engine coolant. *See Drain, Flush and Refill Cooling System with New Coolant on page 5-33*.

CAUTION

- **Only use the engine coolant specified. Other engine coolants may affect warranty coverage, cause an internal buildup of rust and scale and / or shorten engine life.**
- **Prevent dirt and debris from contaminating the engine coolant. Carefully clean the radiator cap and the surrounding area before you remove the cap.**
- **NEVER mix different types of engine coolants. This may adversely affect the properties of the engine coolant.**

0000006en

Section 9

LUBRICATION SYSTEM

Page

Before You Begin Servicing 9-3
Introduction 9-5
Oil Pump Service Information 9-5
- Engine Oil Pressure 9-5
- Outer Rotor Outside Clearance 9-5
- Outer Rotor Side Clearance 9-5
- Outer Rotor to Inner Rotor Tip Clearance 9-5
- Inner Rotor and Gear Boss Clearance 9-6

Lubrication System Diagram 9-7
Checking Engine Oil Pressure 9-8
Trochoid Oil Pump 9-8
- Oil Pump Components 9-8
- Disassembly of Oil Pump 9-9
- Cleaning and Inspection 9-10
- Reassembly of Oil Pump 9-11

This Page Intentionally Left Blank

BEFORE YOU BEGIN SERVICING

CAUTION



NEVER permit anyone to operate the engine or driven machine without proper training.

- **Read and understand this Operation Manual before you operate or service the machine to ensure that you follow safe operating practices and maintenance procedures.**
- **Machine safety signs and labels are additional reminders for safe operating and maintenance techniques.**
- **See your authorized Yanmar industrial engine dealer or distributor for additional training.**

0000002en

WARNING



ENTANGLEMENT HAZARD!

- **Stop the engine before you begin to service it.**
- **NEVER leave the key in the key switch when you are servicing the engine. Someone may accidentally start the engine and not realize you are servicing it. This could result in a serious injury.**
- **If you must service the engine while it is operating, remove all jewelry, tie back long hair, and keep your hands, other body parts and clothing away from moving / rotating parts.**
- **Failure to comply could result in death or serious injury.**

0000010en

WARNING



BURN HAZARD!

- **Keep your hands and other body parts away from hot engine surfaces such as the muffler, exhaust pipe, turbocharger (if equipped) and engine block during operation and shortly after you shut the engine down. These surfaces are extremely hot while the engine is operating and could seriously burn you.**
- **Failure to comply could result in death or serious injury.**

0000015en

⚠ WARNING



FUME / BURN HAZARD!

- Always read and follow safety related precautions found on containers of hazardous substances like parts cleaners, primers, sealants and sealant removers.
- Failure to comply could result in death or serious injury.

0000014en

⚠ CAUTION



FLYING OBJECT HAZARD!

- ALWAYS wear eye protection when servicing the engine and when using compressed air or high-pressure water. Dust, flying debris, compressed air, pressurized water or steam may injure your eyes.
- Failure to comply may result in minor or moderate injury.

0000003en

CAUTION

- Only use the engine oil specified. Other engine oils may affect warranty coverage, cause internal engine components to seize and / or shorten engine life.
- Prevent dirt and debris from contaminating the engine oil. Carefully clean the oil cap / dipstick and the surrounding area before you remove the cap.
- NEVER mix different types of engine oil. This may adversely affect the lubricating properties of the engine oil.
- NEVER overfill. Overfilling may result in white exhaust smoke, engine overspeed or internal damage.

0000005en

CAUTION

If the oil pump must be replaced, replace it as an assembly only. Do not replace individual components.

0000030en

INTRODUCTION

This section of the *Service Manual* describes the procedures necessary to service the 2TNV70, 3TNV70 and 3TNV76 trochoid oil pumps.

Note: *See Replace Engine Oil and Engine Oil Filter on page 5-26 for engine oil and engine oil filter replacement procedures.*

OIL PUMP SERVICE INFORMATION

Engine Oil Pressure

Model	at Rated Engine rpm	at Low Idle Speed
3TNV72	42 - 64 psi (0.29 - 0.44 MPa 2.96 - 4.49 kgf/cm^2)	8.8 psi (0.06 MPa; 0.6 kfg/cm^2) or greater

Outer Rotor Outside Clearance

Model	Standard	Limit	Reference Page
3TNV72	0.0047 - 0.0083 in. (0.12 - 0.21 mm)	0.0118 in. (0.30 mm)	*Check Outer Rotor Outside Clearance on page 9-10*

Outer Rotor Side Clearance

Model	Standard	Limit	Reference Page
3TNV72	0.0008 - 0.0028 in. (0.02 - 0.07 mm)	0.0047 in. (0.12 mm)	*Check Outer Rotor Side Clearance on page 9-10*

Outer Rotor to Inner Rotor Tip Clearance

Model	Standard	Limit	Reference Page
3TNV72	-	0.0063 in. (0.16 mm)	*Outer Rotor to Inner Rotor Tip Clearance on page 9-10*

Inner Rotor and Gear Boss Clearance

Item	Parts	Standard Dimension	Standard Clearance	Standard Clearance Limit	Reference Page
Inside Clearance of Inner Rotor	Gear Boss Diameter	2.0886 - 2.0925 in. (53.05 - 53.15 mm)	0.012 - 0.020 in. (0.3 - 0.5 mm)	0.024 in. (0.6 mm)	*Check Inner Rotor and Gear Boss Clearance on page 9-11*
	Rotor Diameter	2.1043 - 2.1083 in. (53.45 - 53.55 mm)			
Inner Rotor Width Across Flat Clearance	Width Across Flat of Gear Boss	1.9468 - 1.9587 in. (49.45 - 49.75 mm)	0.008 - 0.024 in. (0.2 - 0.6 mm)	0.028 in. (0.7 mm)	
	Width Across Flat of Rotor	1.9665 - 1.9705 in. (49.95 - 50.05 mm)			

LUBRICATION SYSTEM DIAGRAM

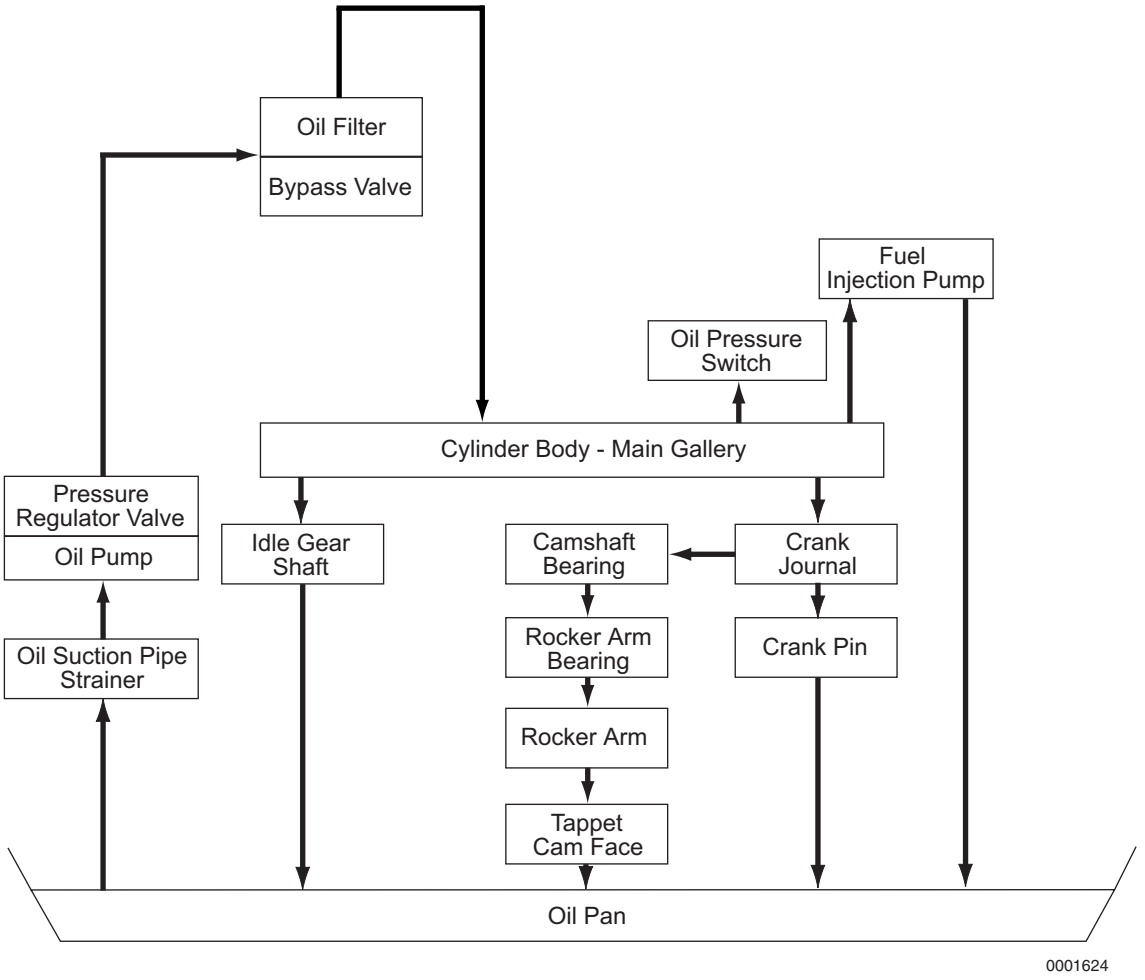

Figure 9-1

CHECKING ENGINE OIL PRESSURE

Perform an engine oil pressure check if there is any indication of low oil pressure such as the oil pressure indicator is on or the oil pressure gauge indicates low oil pressure. *See Engine Oil Pressure on page 9-5 for the engine oil pressure specification.*

1. Disconnect the wire lead from the oil pressure switch or sending unit **(Figure 9-2, (1))**.

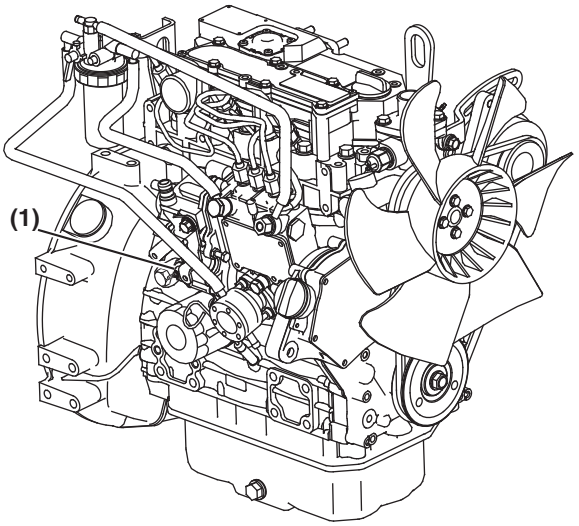

Figure 9-2

2. Remove the oil pressure switch.
3. Install a mechanical oil pressure gauge in the oil pressure switch port.
4. Start the engine:
   - If the mechanical oil pressure test gauge indicates good oil pressure, replace the faulty oil pressure switch or sending unit or faulty machine oil pressure gauge in instrument panel.
   - If the mechanical oil pressure test gauge indicates low oil pressure, troubleshoot the lubrication system to locate the cause of the low oil pressure. *See Troubleshooting Charts on page 13-7.* Repair as necessary.

TROCHOID OIL PUMP

Oil Pump Components

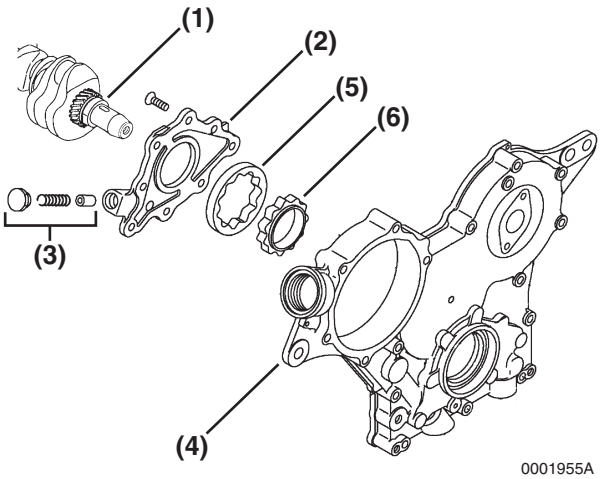

1 – Crankshaft
2 – Oil Pump Cover
3 – Oil Pressure Regulator
4 – Gear Case Cover
5 – Outer Rotor
6 – Inner Rotor

Figure 9-3

Disassembly of Oil Pump

CAUTION

If the oil pump must be replaced, replace it as an assembly only. Do not replace individual components.

0000030en

1. Remove the engine cooling fan guard (if equipped), engine cooling fan **(Figure 9-4, (1))**, spacer **(Figure 9-4, (2))**, engine coolant pump V-pulley **(Figure 9-4, (3))** and V-belt.

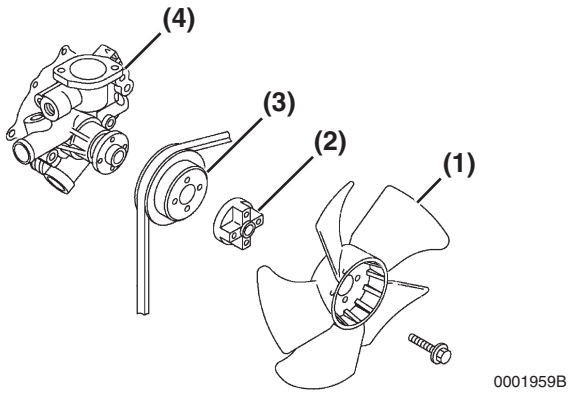

Figure 9-4

2. Remove the front crankshaft pulley and gear case cover. *See Removal of Timing Gear Case Cover on page 6-38.*
3. Remove the seven oil pump cover screws **(Figure 9-5, (2))**.

Note: The oil pump cover screws are installed using a liquid thread lock. It may be necessary to used “localized heat” (small propane torch) and an impact-type screwdriver to remove these screws.

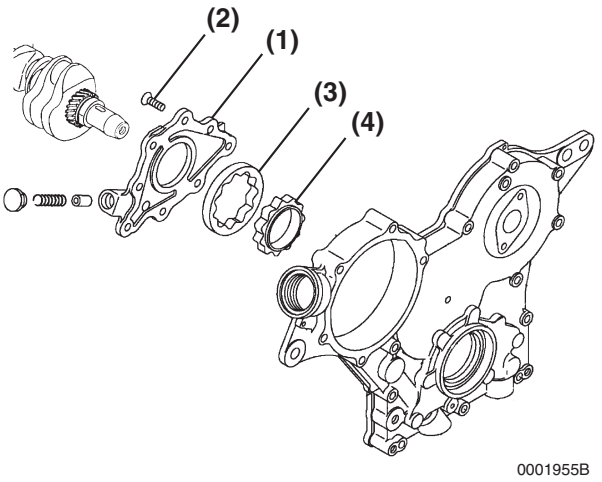

Figure 9-5

4. Remove the oil pump cover **(Figure 9-5, (1))** from the gear case.
5. Remove the outer rotor **(Figure 9-5, (3))** and inner rotor **(Figure 9-5, (4))** from the gear case cover.
6. Remove the oil pressure regulator valve **(Figure 9-6, (1))** from the oil pump cover **(Figure 9-6, (2))**.

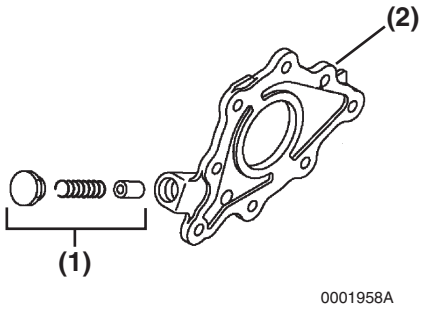

Figure 9-6

Cleaning and Inspection

Wash the oil pump cover, the oil pressure regulator valve, the oil pump cavity and the inner and outer rotors. Inspect the parts for wear or damage. Replace as necessary.

Note: If the oil pump cavity is damaged, the gear case cover must be replaced.

⚠ CAUTION

If any oil pump component clearance exceeds its limit, the oil pump must be replaced as an assembly.

0000015en

Check Outer Rotor Outside Clearance

1. Reinstall the outer and inner rotors. The dots on the rotor faces must face “up.” Make sure that the pilot on the back of the inner rotor fits into the bore of the oil pump cavity and the top surface of the inner rotor is flush with the top surface of the outer rotor.
2. Determine the outside clearance of the outer rotor. Insert a feeler gauge between the outer rotor **(Figure 9-7, (1))** and the gear case oil pump cavity **(Figure 9-7, (2))**.

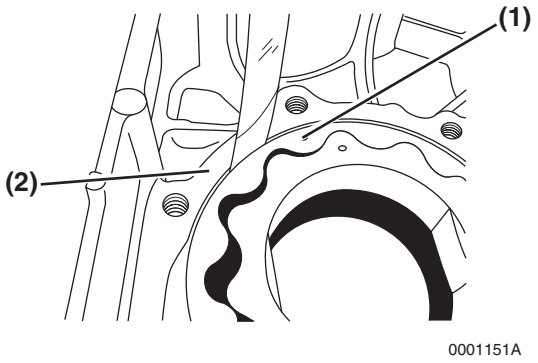

Figure 9-7

Record the measurement. *See Outer Rotor Outside Clearance on page 9-5 for the service limit.*

Outer Rotor to Inner Rotor Tip Clearance

Determine the outer rotor to inner rotor tip clearance. Insert a feeler gauge between the top of an inner rotor tooth **(Figure 9-8, (1))** and the top of an outer rotor tooth **(Figure 9-8, (2))** and measure the clearance.

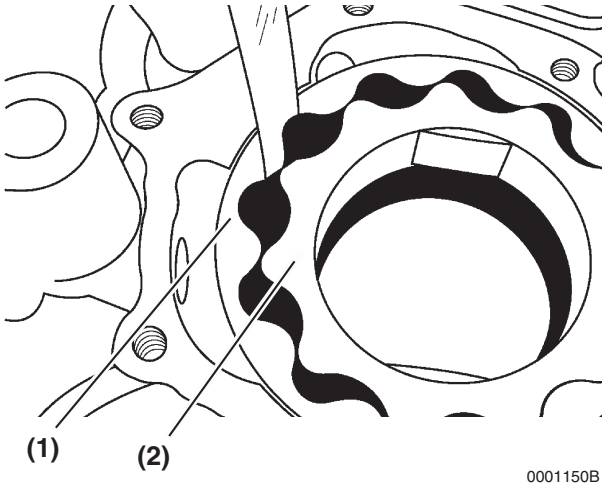

Figure 9-8

Record the measurement. *See Outer Rotor to Inner Rotor Tip Clearance on page 9-5 for the service limit.*

Check Outer Rotor Side Clearance

Determine the side clearance of the outer rotor across the pump cavity. While pressing down on the outer rotor, measure the depression using a depth micrometer **(Figure 9-9)**.

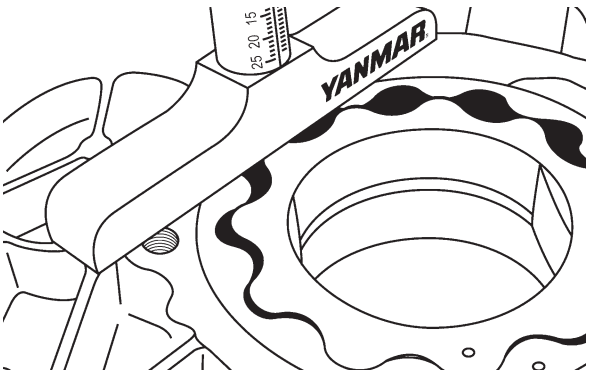

Figure 9-9

Record the measurement. *See Outer Rotor Side Clearance on page 9-5 for the service limit.*

Check Inner Rotor and Gear Boss Clearance

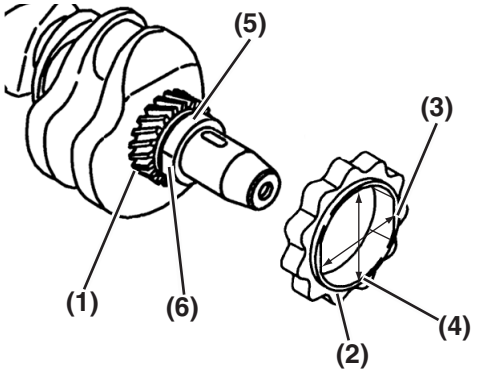

1 – Crank Gear
2 – Inner Rotor
3 – Inside Width Across Flats of Inner Rotor
4 – Overall Inside Diameter of Inner Rotor
5 – Overall Inside Diameter of Gear Boss
6 – Outside Width Across Flats of Gear Boss

Figure 9-10

Record the measurement. *See Inner Rotor and Gear Boss Clearance on page 9-6 for service limits.*

Reassembly of Oil Pump

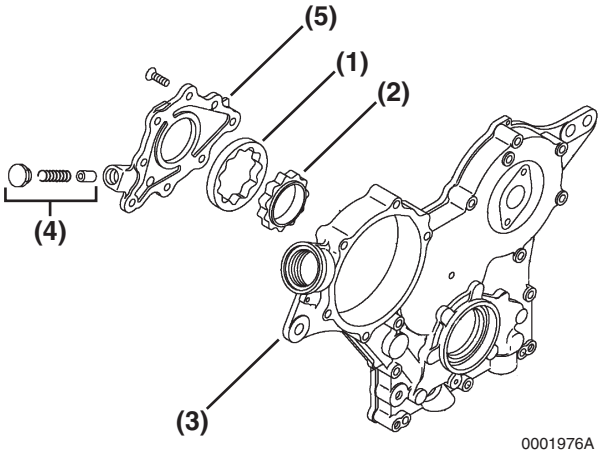

Figure 9-11

1. Lubricate the outer rotor **(Figure 9-11, (1))**, inner rotor **(Figure 9-11, (2))** and pump bore in the gear case cover **(Figure 9-11, (3))** with clean engine oil.
2. Reinstall the outer rotor in the gear case. The dot mark on the face of the outer rotor must face up toward the oil pump cover.
3. Reinstall the inner rotor into the gear case cover with the dot mark also facing up. Make sure that the pilot on the back side of the inner rotor fits into the bore in the gear case cover and the top surface of the inner rotor is flush with the top surface of the outer rotor.
4. Reinstall the oil pressure regulator valve **(Figure 9-11, (4))** into the oil pump cover **(Figure 9-11, (5))**. Apply LOCTITE® 242 (red) to the valve plug, following the manufacturer's instructions.
5. Reinstall the oil pump cover **(Figure 9-11, (5))**. Apply LOCTITE 290 (green) or LOCTITE 262 (red) to the oil pump cover screws. Tighten the pump cover screws to 52 - 70 in·lb (5.9 - 7.9 N·m, 0.6 - 7.9 kgf·m).
6. Reinstall the crankshaft pulley and gear case cover. *See Removal of Timing Gear Case Cover on page 6-38.*
7. Reinstall the engine coolant pump V-pulley **(Figure 9-12, (3))**, spacer **(Figure 9-12, (2))**, engine cooling fan **(Figure 9-12, (1))** and engine cooling fan guard (if equipped).

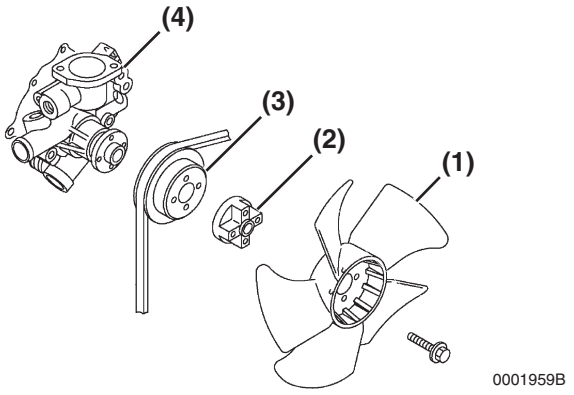

Figure 9-12

8. Reinstall the V-belt. Tighten the V-belt to the proper tension. *See Check and Adjust Cooling Fan V-Belt on page 5-27.*

This Page Intentionally Left Blank

Section 10

STARTER MOTOR

Page

Before You Begin Servicing 10-3
Introduction 10-5
Starter Motor Information 10-5
Starter Motor Specifications 10-6
Starter Motor Troubleshooting 10-7
Starter Motor Components 10-8
Starter Motor 10-9
- Removal of Starter Motor 10-10
- Disassembly of Starter Motor 10-10
- Cleaning and Inspection 10-12
- Reassembly of Starter Motor 10-17
- Check Pinion Projection Length 10-19
- No-Load Test 10-19
- Installation of Starter Motor 10-20

This Page Intentionally Left Blank

BEFORE YOU BEGIN SERVICING

⚠ WARNING



ENTANGLEMENT HAZARD!

- Stop the engine before you begin to service it.
- NEVER leave the key in the key switch when you are servicing the engine. Someone may accidentally start the engine and not realize you are servicing it. This could result in a serious injury.
- If you must service the engine while it is operating, remove all jewelry, tie back long hair, and keep your hands, other body parts and clothing away from moving / rotating parts.
- Failure to comply could result in death or serious injury.

0000010en

⚠ WARNING



SHOCK HAZARD!

- Turn off the battery switch (if equipped) or disconnect the negative battery cable before servicing the electrical system.
- Check the electrical harnesses for cracks, abrasions, and damaged or corroded connectors. ALWAYS keep the connectors and terminals clean.
- Failure to comply could result in death or serious injury.

0000009en

⚠ WARNING



FUME / BURN HAZARD!

- Always read and follow safety related precautions found on containers of hazardous substances like parts cleaners, primers, sealants and sealant removers.
- Failure to comply could result in death or serious injury.

0000014en

⚠ CAUTION



FLYING OBJECT HAZARD!

- **ALWAYS wear eye protection when servicing the engine and when using compressed air or high-pressure water. Dust, flying debris, compressed air, pressurized water or steam may injure your eyes.**
- **Failure to comply may result in minor or moderate injury.**

0000003en

CAUTION

The starter motor can be damaged if operated continuously longer than 10 seconds while performing the no-load test.

0000034en

CAUTION

Make sure that the combined total resistance of the battery cable in both directions between the starter motor and the battery is within the value indicated on the wiring diagram. The starter motor will malfunction or break down if the resistance is higher than the specified value.

0000054en

CAUTION

The starter motor is water-proofed according to JIS D 0203, R2 which protects the motor from rain or general cleaning. Do not use high-pressure wash or submerse the starter motor in water.

0000055en

CAUTION

Use a specialized battery charger to recharge a battery with a voltage of 8 volts or less. Booster starting a battery with a voltage of 8 volts or less will generate an abnormally high voltage and destroy electrical equipment.

0000056en

INTRODUCTION

This section of the *Service Manual* covers the servicing of starter motor. Yanmar Part No. 119717-77010 is used in this section to show the service procedures for a representative starter motor. For specific part detail, see the *Yanmar Parts Catalog* for the engine being serviced.

STARTER MOTOR INFORMATION

YANMAR Part Number	Mfg.	Mfg. Model Number	Specification	No Load			Loaded			
				Terminal Voltage	Amperage Draw	RPM	Terminal Voltage	Amperage Draw	Torque	RPM
119515-77010	Denso	428000-2190	DC12V -1.3 hp (1.0 kW)	11.5	90A (Max)	3000 (Min)	8.0	200 (Max)	42 in.-lb (4.7 N·m; 0.48 kgf·m)	1240 (Min)
119717-77010	Denso	428000-1590	DC12V -1.5 hp (1.1 kW)	11.5	90A (Max)	3000 (Min)	8.7	230 (Max)	61 in.-lb (6.9 N·m; 0.70 kgf·m)	1130 (Min)
119740-77010	Denso	428000-3310	DC12V -1.9 hp (1.4 kW)	11.5	90A (Max)	3000 (Min)	8.5	350 (Max)	119 in.-lb (13.5 N·m; 1.38 kgf·m)	1000 (Min)

STARTER MOTOR SPECIFICATIONS

Yanmar Part Number			119717-77010	119515-77010
Nominal Output			1.5 hp (1.1 kW)	1.34 hp (1.0 kW)
Weight			6.6 lb (3.0 kg)	6.3 lb (2.85 kg)
Revolution Direction (As Viewed From Pinion)			Clockwise	Clockwise
Engagement System			Magnetic Shift	Magnetic Shift
No-load	Terminal Voltage/Current		11.5 V / 90 A max	11.5 V / 90 A max
	Revolution		3000 rpm (min^{-1})	3000 rpm (min^{-1})
Loaded	Terminal Voltage/Current		8.7 V / 230 A	8.0 V / 230 A
	Torque		61 in·lb (6.9 N·m; 0.70 kgf·m)	41.7 in·lb (4.7 N·m; 0.48 kgf·m)
	Revolution		1130 rpm (min)	1240 rpm (min)
Stalled	Terminal Voltage/Current		2.5 V / 325 A max	2.5 V / 260 A max
	Torque		73 in.-lb (8.24 N·m; 0.84 kgf·m) minimum	43.5 in.-lb (4.9 N·m; 0.5 kgf·m) minimum
Clutch System			Overrunning	Overrunning
Pinion Projection Voltage at 212°F (100 °C)			8.0 V max	8.0 V max
Pinion DP or Module/Number of Teeth			M2.54/9	M2.54/9
Application			Standard	Standard
Brush	Spring Force		3.1 - 4.0 lbf (13.7 - 17.6 N; 1.4 - 1.8 kgf)	3.1 - 4.0 lbf (13.7 - 17.6 N; 1.4 - 1.8 kgf)
	Length	Standard	0.55 in. (14 mm)	0.55 in. (14 mm)
		Service Limit	0.44 in. (11.1 mm)	0.44 in. (11.1 mm)
Solenoid Switch	Pull-In Coil Resistance		0.484 W at 68°F (20°C)	0.484 W at 68°F (20°C)
	Hold-In Coil Resistance		1.055 W at 68°F (20°C)	1.055 W at 68°F (20°C)
Commutator	Outside Diameter	Standard	1.102 in. (28.0 mm)	1.102 in. (28.0 mm)
		Service Limit	1.063 in. (27.0 mm)	1.063 in. (27.0 mm)
	Run-Out	Standard	0.001 in. (0.02 mm)	0.001 in. (0.02 mm)
		Service Limit	0.002 in. (0.05 mm)	0.002 in. (0.05 mm)
	Insulation Depth	Standard	0.024 in. (0.6 mm)	0.024 in. (0.6 mm)
		Service Limit	0.008 in. (0.2 mm)	0.008 in. (0.2 mm)

STARTER MOTOR TROUBLESHOOTING

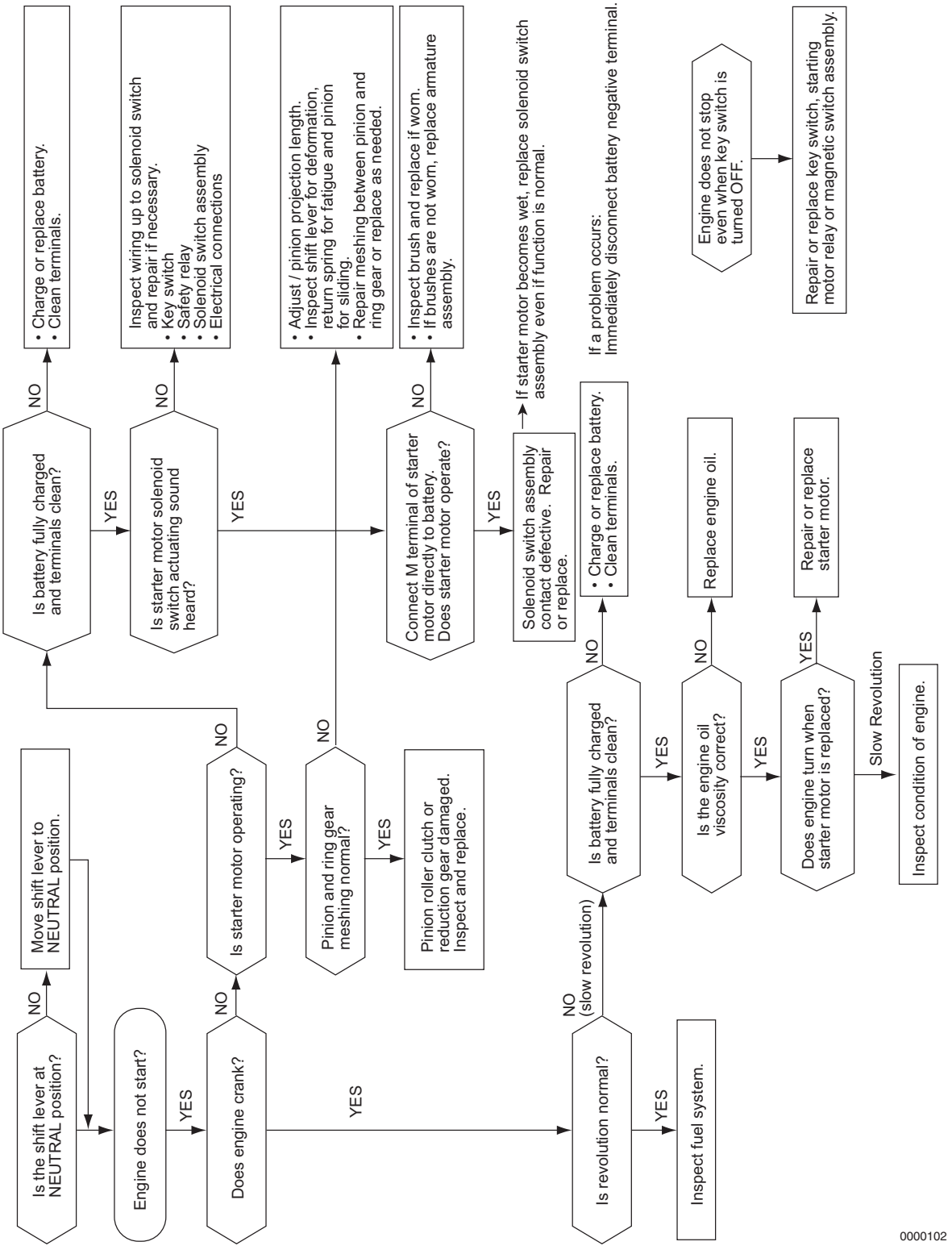

STARTER MOTOR COMPONENTS

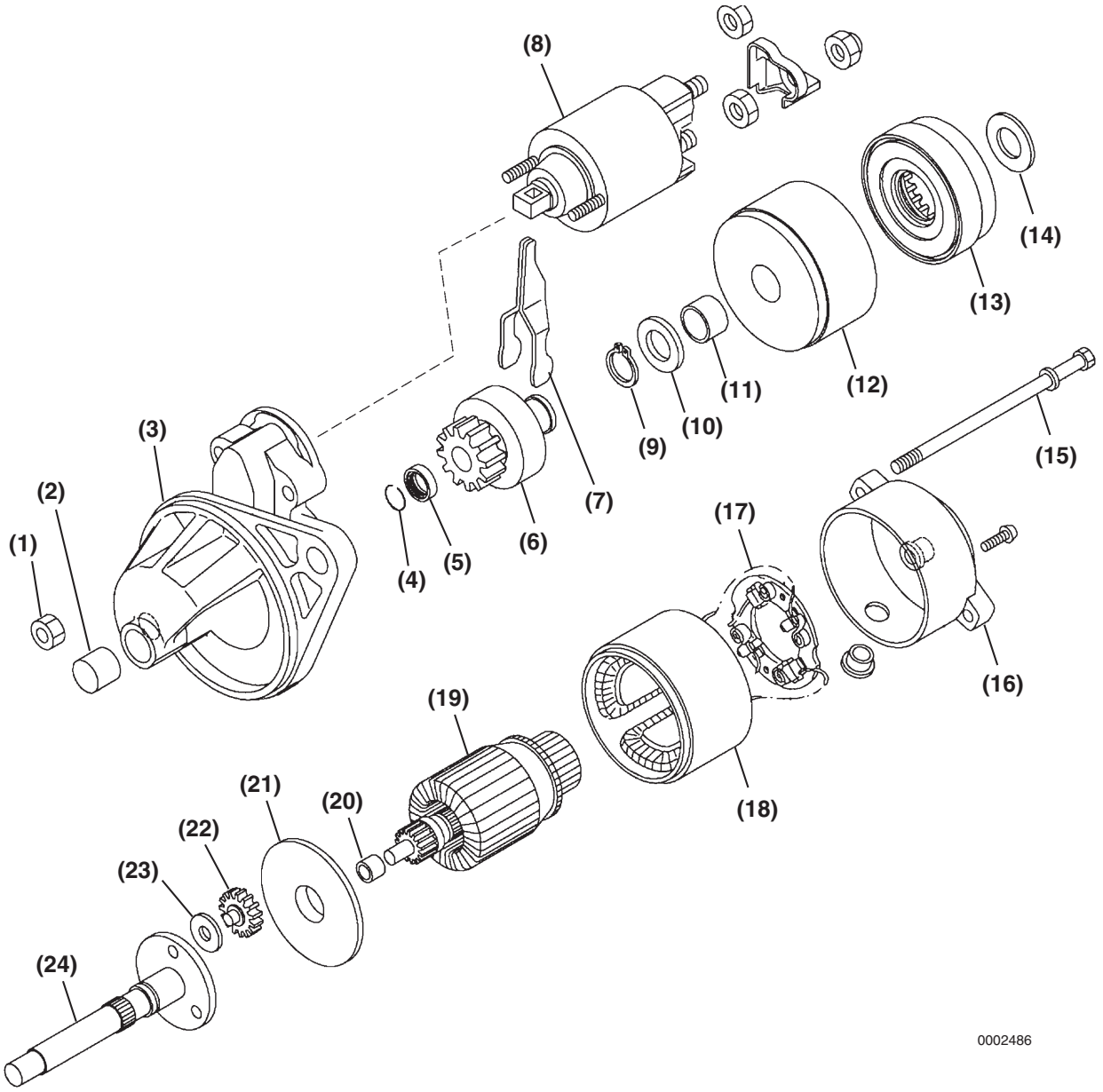

Figure 10-1

1 – Nut
2 – Needle Bearing
3 – Pinion Housing
4 – Pinion Retaining Ring
5 – Pinion Stop
6 – Pinion
7 – Shift Lever
8 – Solenoid Switch Assembly
9 – Snap Ring
10 – Washer
11 – Bushing
12 – Intermediate Housing
13 – Reduction Gear
14 – Washer
15 – Through Bolt
16 – End Housing
17 – Brush Plate and Holder
18 – Field Assembly
19 – Armature
20 – Bushing
21 – Plate
22 – Planetary Gear (3 used)
23 – Washer (3 used)
24 – Pinion Shaft

STARTER MOTOR

⚠ WARNING



SHOCK HAZARD!

- **Turn off the battery switch (if equipped) or disconnect the negative battery cable before servicing the electrical system.**
- **Check the electrical harnesses for cracks, abrasions, and damaged or corroded connectors. ALWAYS keep the connectors and terminals clean.**
- **Failure to comply could result in death or serious injury.**

0000009en

Note: While starter motor design varies between models, the basic repair procedures are the same. The following procedures are typical and may differ from the starter being serviced.

Removal of Starter Motor

1. Disconnect the battery cables at the battery, negative (-) cable first.
2. Remove the electrical wires from the solenoid switch assembly.
3. Remove the starter mounting bolts **(Figure 10-2, (1))**. Remove the starter motor from the flywheel housing.

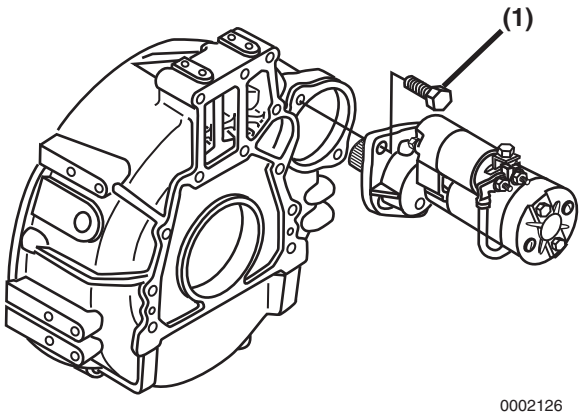

Figure 10-2

Disassembly of Starter Motor

1. Make alignment marks across all mating joints.
2. Disconnect the field wire from the solenoid switch **(Figure 10-3)**.

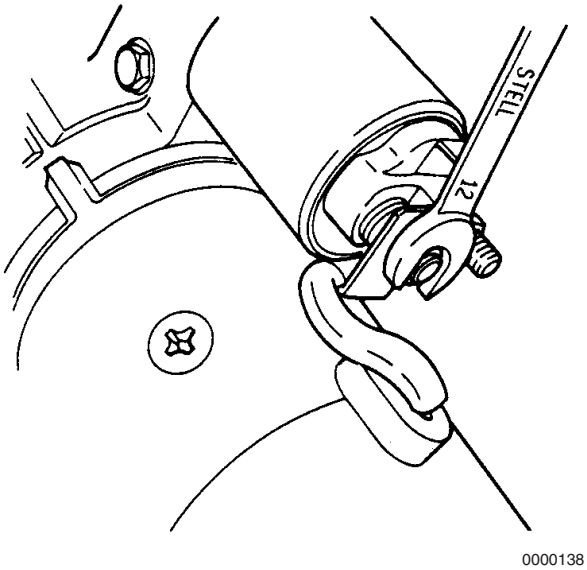

Figure 10-3

3. Remove the two bolts or nuts retaining the solenoid switch assembly **(Figure 10-4, (1))** to the pinion housing. Remove the solenoid switch assembly and dust covers **(Figure 10-4, (2))**. Remove the plunger **(Figure 10-4, (4))** and torsion spring **(Figure 10-4, (3))** from the pinion housing.

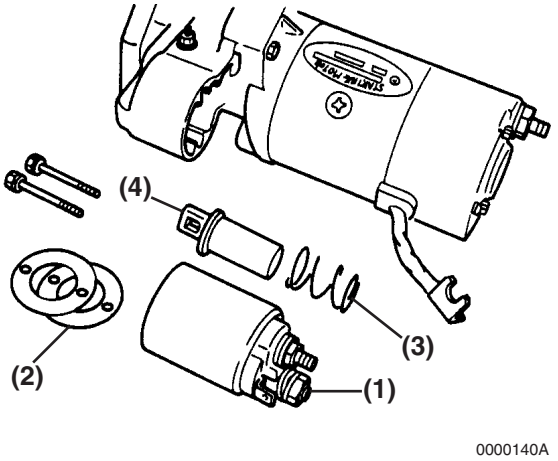

Figure 10-4

4. Remove the two bolts **(Figure 10-5, (1))** securing the rear cover **(Figure 10-5, (2))** to the brush holder assembly **(Figure 10-5, (3))**.

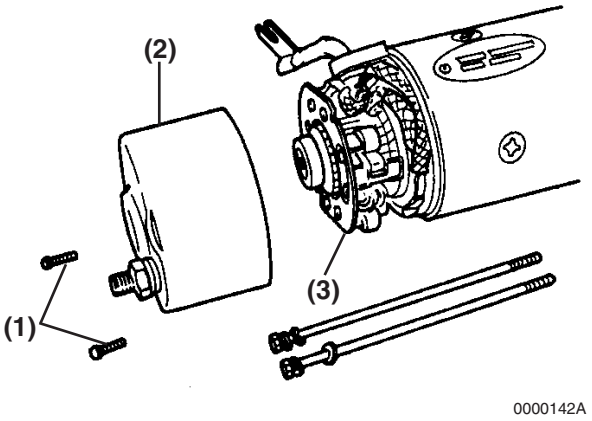

Figure 10-5

5. Remove the two through bolts. Remove the rear cover **(Figure 10-5, (2))**.

6. Pull the brush springs up using a brush spring puller. On the negative (-) side, bring the brush spring into contact with the side of the brushes to hold the brushes clear of the commutator surface. On the positive (+) side, remove the brushes from the brush holder assembly **(Figure 10-6)**.

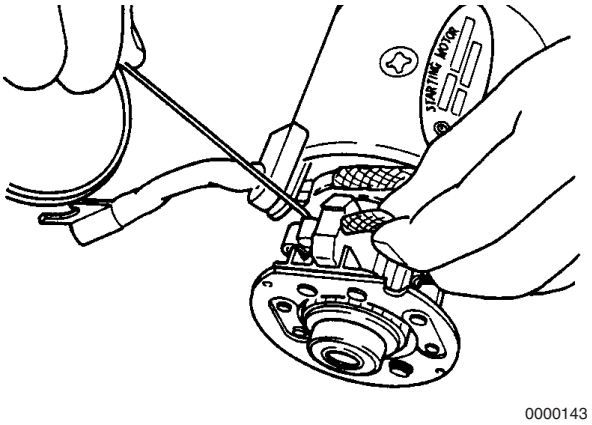

Figure 10-6

7. Remove the brush plate and holder **(Figure 10-7, (1))**.

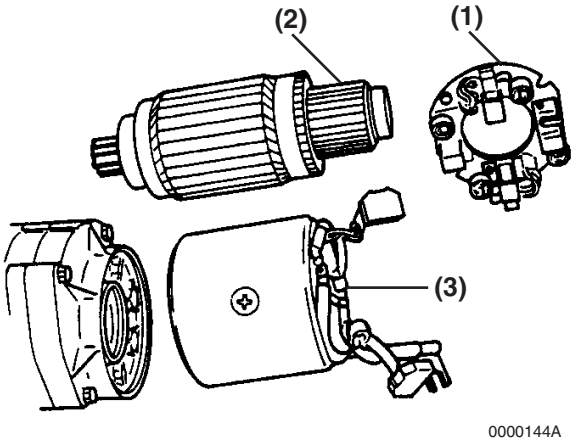

Figure 10-7

8. Pull the field assembly **(Figure 10-7, (3))** off from the armature assembly **(Figure 10-7, (2))**.
9. Remove the armature from the intermediate housing.
10. Remove the intermediate housing, gear and pinion shaft assembly **(Figure 10-8, (4))** from the pinion housing **(Figure 10-8, (3))**. Disengage from the shift lever as it is removed.
11. Remove the shift lever **(Figure 10-8, (2))**, pin, and spacer **(Figure 10-8, (1))**.

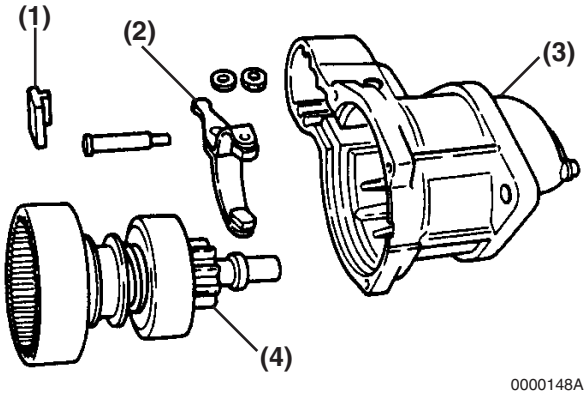

Figure 10-8

12. Pull the pinion stop **(Figure 10-9, (1))** down to expose the retaining ring. Using a flat-blade screwdriver, remove the retaining ring **(Figure 10-9, (2))** from the pinion shaft.

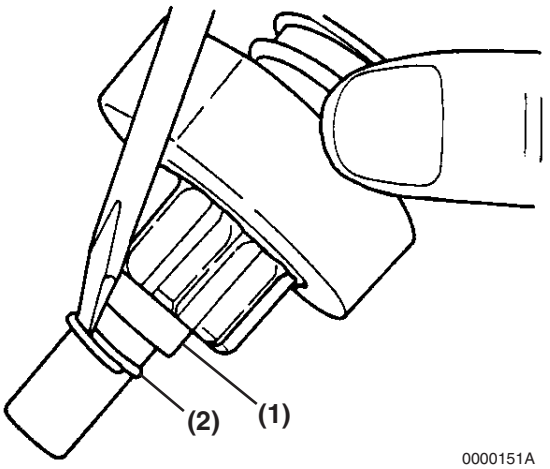

Figure 10-9

13. Remove the pinion stop **(Figure 10-10, (3))**, return spring (if equipped), and pinion clutch assembly **(Figure 10-10, (2))**, from the pinion shaft **(Figure 10-10, (1))**.

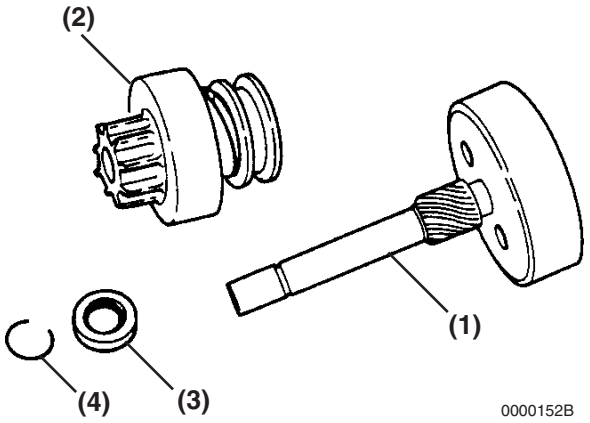

Figure 10-10

14. Remove the snap ring **(Figure 10-11, (1))**. Remove the pinion shaft **(Figure 10-11, (5))**, planetary gears **(Figure 10-11, (6))**, washers, and reduction gear **(Figure 10-11, (4))** from the intermediate housing **(Figure 10-11, (3))**.

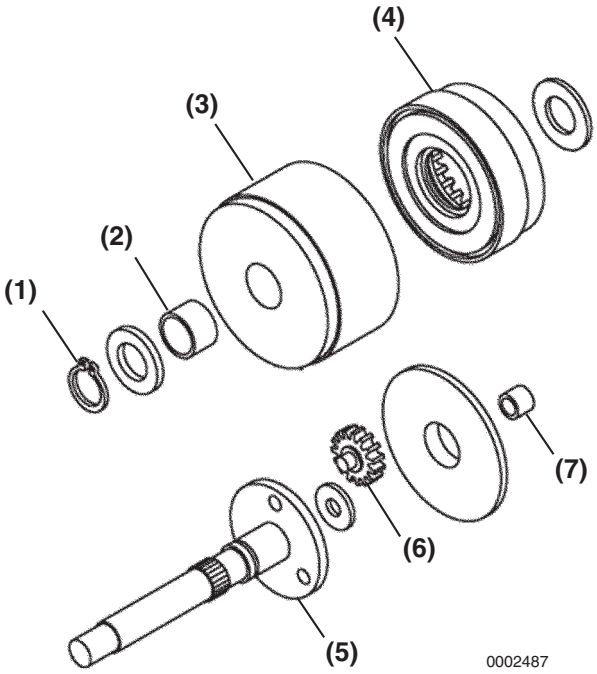

Figure 10-11

15. Inspect the intermediate bushing **(Figure 10-11, (2))** and replace if worn or damaged.
16. Inspect armature bushing **(Figure 10-11, (7))** and replace if worn or damaged.

Cleaning and Inspection

Armature

Commutator Surface Inspection

If the commutator surface is rough, polish the surface with a #500 to #600 emery cloth.

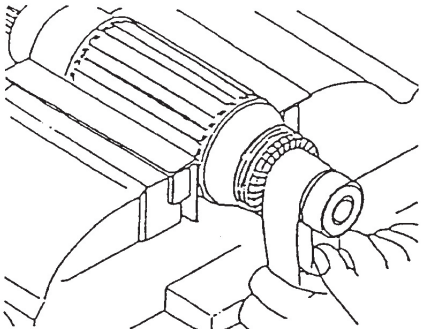

Figure 10-12

Measure Commutator Outside Diameter

Measure the commutator outside diameter. Replace the armature if the measurement is less than the limit. *See Starter Motor Specifications on page 10-6*.

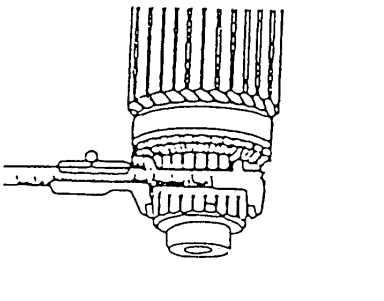

Figure 10-13

Measure Commutator Insulation Depth

Measure the depth of the insulating material **(Figure 10-14, (1))** between commutator segments **(Figure 10-14, (2))**. If the depth measures less than the limit, use a hacksaw blade **(Figure 10-14, (3))** to remove the insulating material until the depth is within the limit. *See Starter Motor Specifications on page 10-6 for service limit.*

A normal commutator condition is indicated in **(Figure 10-14, (4))**. An abnormal commutator condition is indicated in **(Figure 10-14, (5))**.

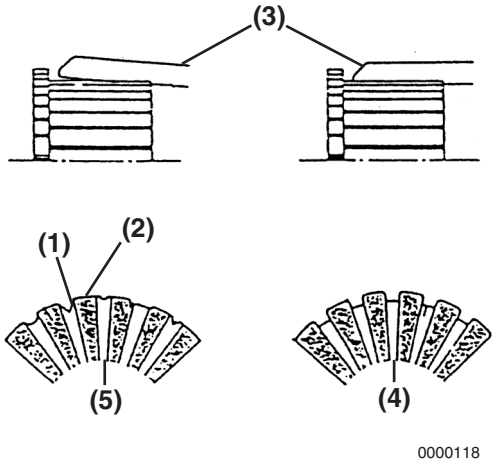

Figure 10-14

Armature Coil Continuity Test

Check for continuity between the commutator segments using a multimeter **(Figure 10-15)**. The multimeter should indicate continuity.

If the multimeter does not indicate continuity, replace the armature.

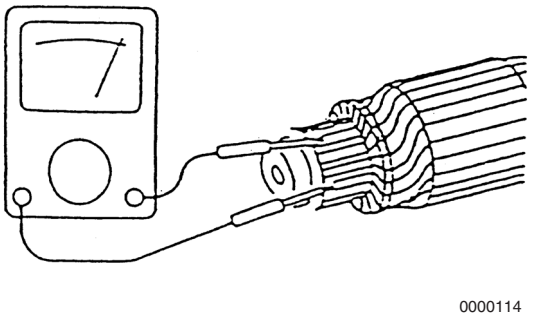

Figure 10-15

Armature Coil Insulation Test

Check for continuity between a commutator segment and the shaft or armature using a multimeter **(Figure 10-16)**. The multimeter should not indicate continuity.

If the multimeter indicates continuity, replace the armature.

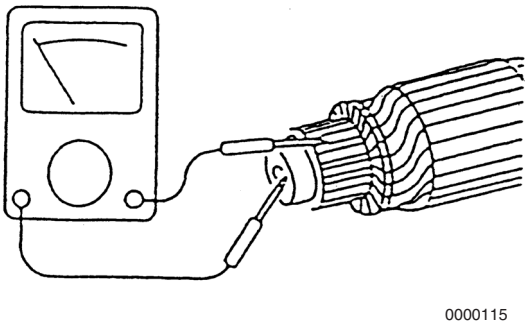

Figure 10-16

Measure Armature and Commutator Run-Out

Measure the armature core run-out and the commutator run-out using a dial indicator **(Figure 10-17)**. Replace the armature if either of the measurements is not within specifications. *See Starter Motor Specifications on page 10-6 for service limit.*

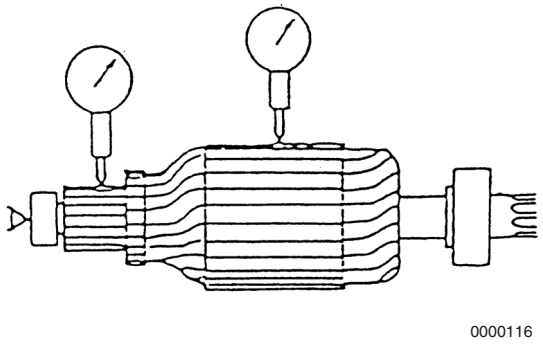

Figure 10-17

Field Coil

Field Coil Continuity Test

Check for continuity between the field coil terminals using a multimeter **(Figure 10-18)**. The multimeter should indicate continuity.

If the multimeter does not indicate continuity, replace the field coil assembly.

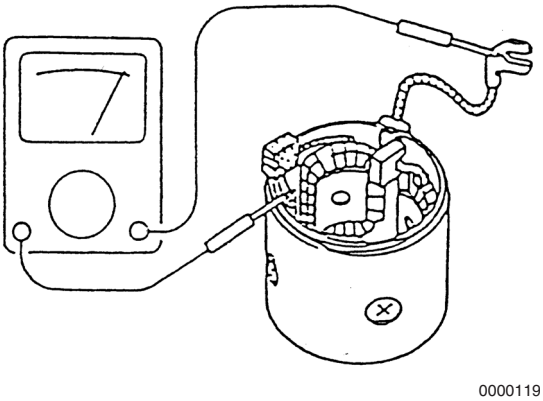

Figure 10-18

Field Coil Insulation Test

Check for continuity between either field coil terminal and the yoke using a multimeter **(Figure 10-19)**. The multimeter should not indicate continuity.

If the multimeter indicates continuity, replace the field coil assembly.

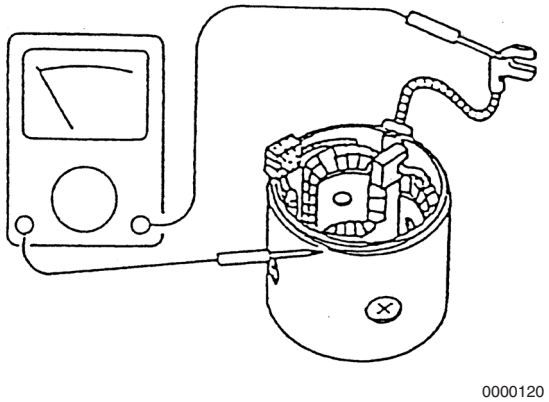

Figure 10-19

Measure Brush Length

Measure the length of the brush **(Figure 10-20)**. Replace the brush if the length is less than the limit. *See Starter Motor Specifications on page 10-6 for service limit.*

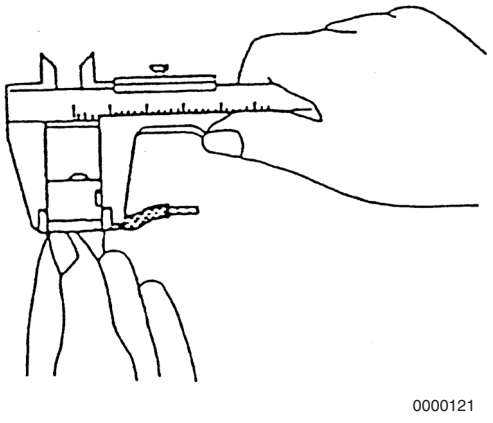

Figure 10-20

Brush Holder

Brush Holder Insulation Test

Check for continuity between each brush holder and the base using a multimeter **(Figure 10-21)**. The multimeter should not indicate continuity.

If the multimeter indicates continuity, replace the brush holder.

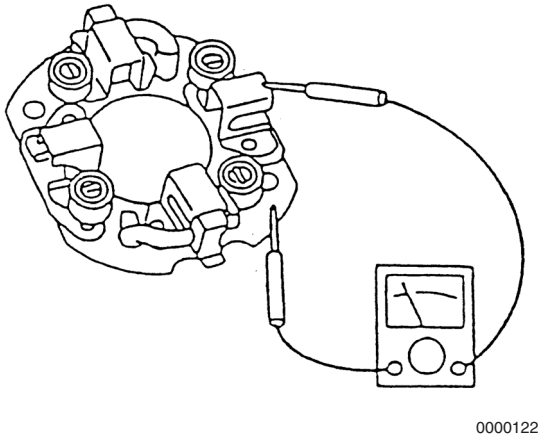

Figure 10-21

Brush Spring Test

Test the spring force for each brush spring **(Figure 10-22)**. Replace the brush spring if the force is not within the range. *See Starter Motor Specifications on page 10-6 for the service limit.*

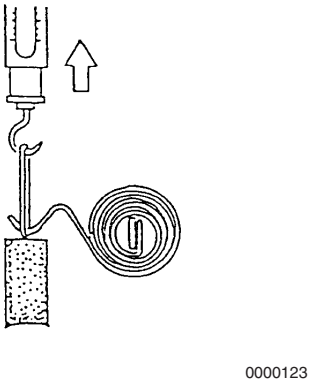

Figure 10-22

Solenoid Switch

If the starter motor becomes wet, replace the solenoid switch even if the solenoid switch assembly function is normal.

Shunt Coil Continuity Test

Check for continuity between the “S” terminal and the switch body using a multimeter **(Figure 10-23)**. The multimeter should indicate continuity.

If the multimeter does not indicate continuity, replace the solenoid switch.

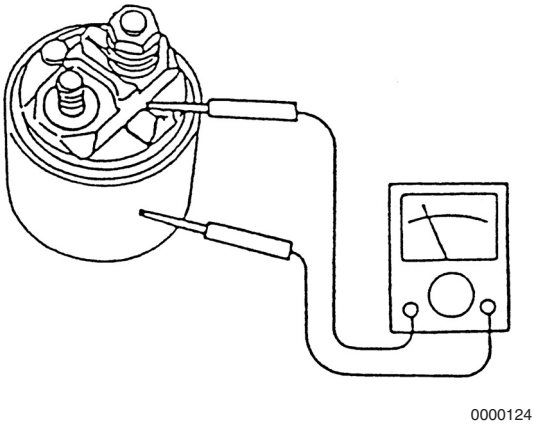

Figure 10-23

Series Coil Continuity Test

Check for continuity between the “S” and “M” terminals using a multimeter **(Figure 10-24)**. The multimeter should indicate continuity.

If the multimeter does not indicate continuity, replace the solenoid switch.

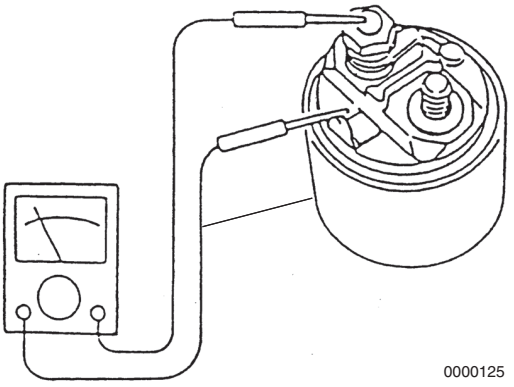

Figure 10-24

Coil Resistance Test

See Starter Motor Specifications on page 10-6 for service limit.

Contact Continuity Test

Depress the plunger at the bottom of the solenoid switch. Check for continuity between the “B” and “M” terminals using a multimeter **(Figure 10-25)**. The multimeter should indicate continuity.

If the multimeter does not indicate continuity, replace the solenoid switch.

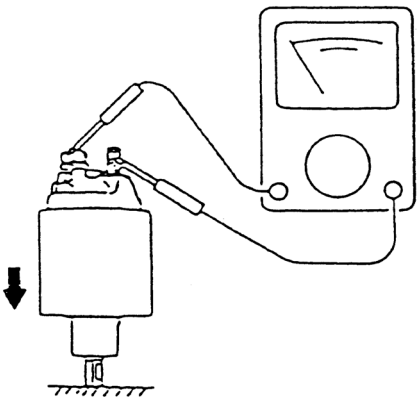

0000126

Figure 10-25

Pinion Clutch Assembly

Pinion Clutch Assembly Inspection

Manually rotate the pinion clutch assembly in the drive direction. It should rotate freely in the drive direction and is locked by turning it in the opposite direction **(Figure 10-26)**. Replace the pinion clutch assembly if the results are different.

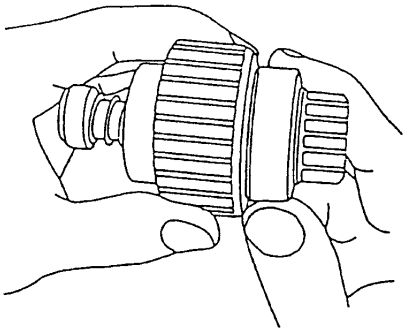

0000127

Figure 10-26

Slide the pinion clutch assembly on the shaft **(Figure 10-27)**. It should slide smoothly on the shaft. Rust, too much grease, or damage could prevent the pinion clutch from sliding smoothly. If the pinion clutch assembly does not slide smoothly, clean the shaft and pinion clutch assembly or replace the damaged component.

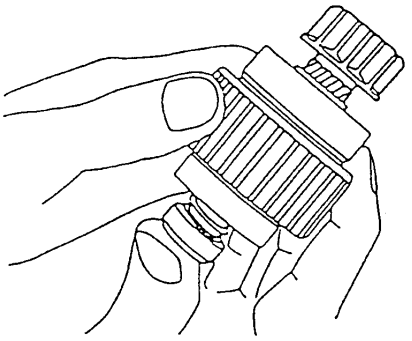

0000128

Figure 10-27

Reassembly of Starter Motor

1. Apply a appropriate starter bendix grease (obtain locally) to the pinion shaft.
2. Reassemble the reduction gear **(Figure 10-28, (4))**, pinion shaft **(Figure 10-28, (5))**, planetary gears **(Figure 10-28, (6))**, and washers into the intermediate housing **(Figure 10-28, (3))**. Reinstall snap ring **(Figure 10-28, (1))**.

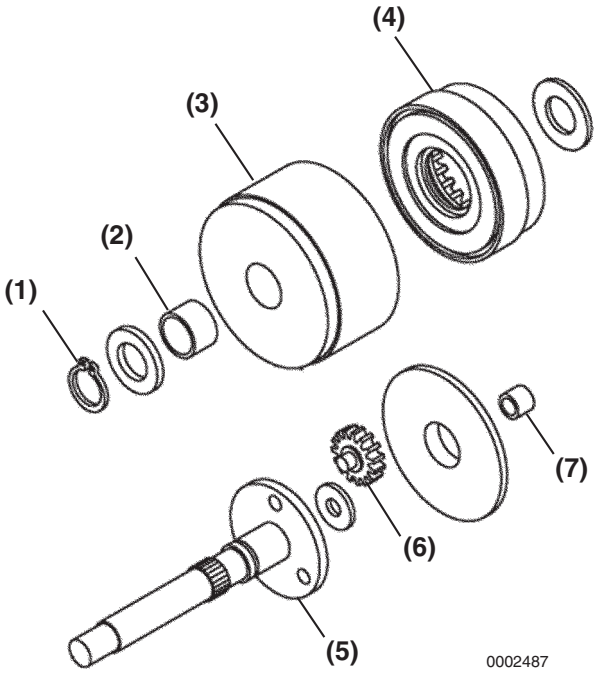

Figure 10-28

3. Reinstall the pinion clutch assembly **(Figure 10-29, (2))**, return spring (if equipped) and pinion stop **(Figure 10-29, (3))** onto the pinion shaft **(Figure 10-29, (1))**. Reinstall the retaining ring **(Figure 10-29, (4))** in the groove in the pinion shaft. Slide the pinion stop over the retaining ring.

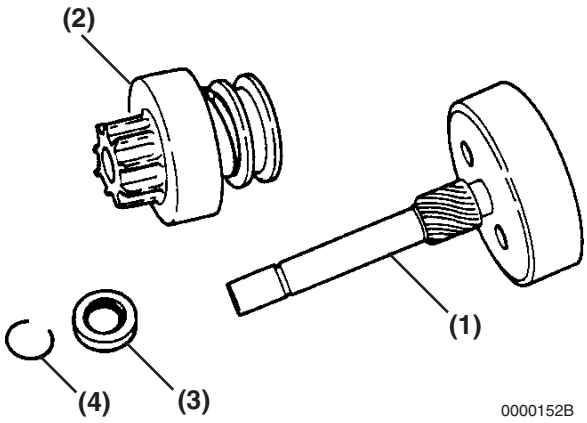

Figure 10-29

4. Apply a small amount of high temperature lithium grease (obtain locally) to the contact surfaces of the shift lever. Reassemble the shift lever **(Figure 10-30, (2))**, spacer (if equipped) **(Figure 10-30, (1))**, and pin.
5. Reinstall the pinion shaft assembly **(Figure 10-30, (4))** in the pinion housing **(Figure 10-30, (3))**. Be sure the shift lever properly engages the pinion.

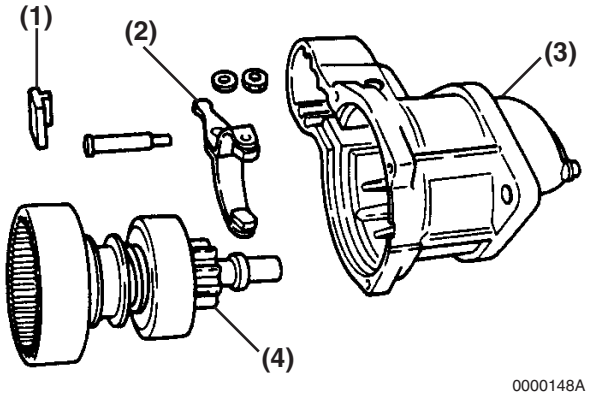

Figure 10-30

6. Apply a small amount of high temperature lithium grease (obtain locally) to the surface of the plunger and the hole that engages the shift lever.
7. Attach the plunger to the shift lever.

8. Reinstall the plate onto the intermediate housing and carefully reinstall the armature assembly **(Figure 10-31, (2))** into the pinion shaft assembly.

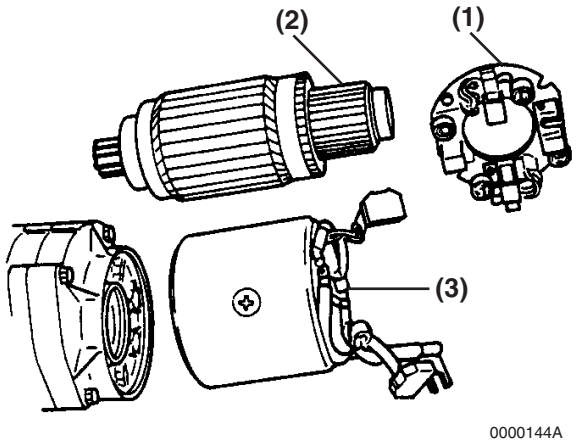

Figure 10-31

9. Reinstall the field assembly **(Figure 10-31, (3))** over the armature assembly and align to the pinion housing.
10. Position the brush springs in brush holders. Reinstall the brushes in the brush holders. Reversing the brushes will cause the starter motor to turn backwards.
11. Carefully reinstall the brush holder **(Figure 10-32, (3))** assembly.
12. Reinstall the rear cover **(Figure 10-32, (2))** and secure with two bolts **(Figure 10-32, (1))**.

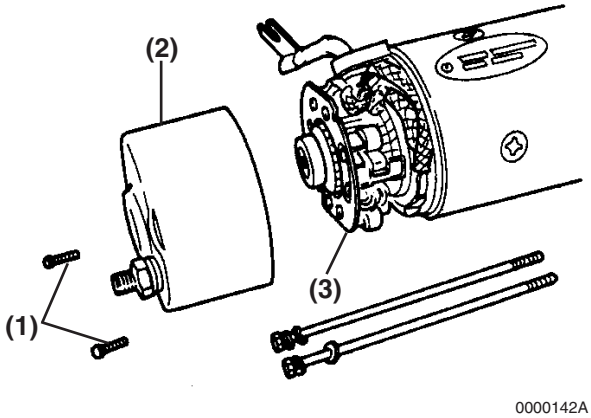

Figure 10-32

13. Reinstall the two through bolts and tighten securely.
14. Reinstall the return spring (if equipped) **(Figure 10-33, (3))** on the solenoid plunger **(Figure 10-33, (4))**. Reinstall the solenoid switch coil **(Figure 10-33, (1))** and dust covers **(Figure 10-33, (2))**. Secure with nuts or bolts.

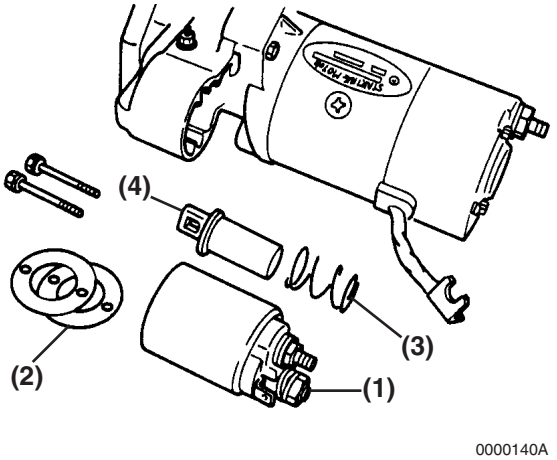

Figure 10-33

15. Reconnect the wire to the solenoid switch assembly. Tighten the nut. Reinstall the cover over the connection.

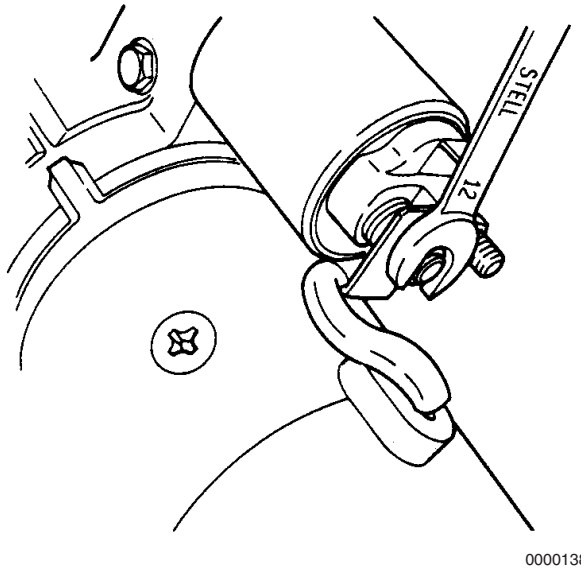

Figure 10-34

Check Pinion Projection Length

1. Connect the positive (+) lead from a battery to the “S” terminal.
2. Connect the negative (-) lead to the “M” terminal.
3. Lightly pull the pinion away from the gear housing.
4. Turn the switch ON and measure the pinion moving distance L in the thrust direction **(Figure 10-35)**. Perform this test within 10 seconds.

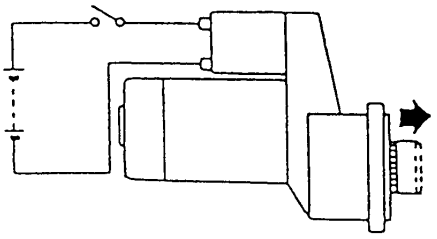

0000132

Figure 10-35

See Starter Motor Specifications on page 10-6 for service limit.

5. If the measured L dimension is outside the standard range, adjust the dust covers to obtain the standard range. Dust covers **(Figure 10-36, (1))** are available in 0.020 in. (0.5 mm) and 0.031 in. (0.8 mm) thicknesses.

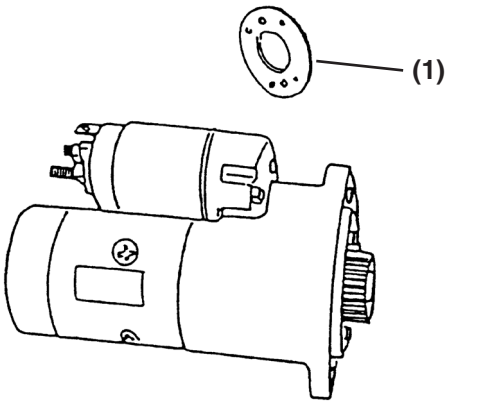

0000133

Figure 10-36

No-Load Test

Test the characteristics of the starter motor by performing a no load test.

CAUTION

The starter motor can be damaged if operated continuously longer than 10 seconds while performing the no-load test.

0000034en

1. Secure the starting motor in a vise or other suitable fixture.
2. Connect an ammeter **(Figure 10-37, (1))** in series between the battery positive (+) terminal **(Figure 10-37, (2))** and the main positive (+) terminal **(Figure 10-37, (3))** on the starter motor.

Note: The ammeter and all wire leads used in this test must have a capacity equal to or greater than the amperage draw specification for the starter motor being tested.

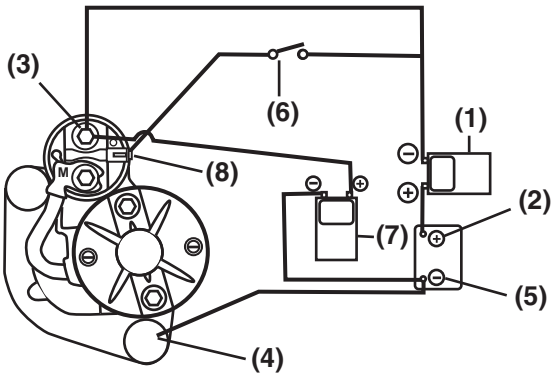

0002127A

Figure 10-37

3. Connect a wire lead between the mounting base of the starter motor **(Figure 10-37, (4))** and the battery negative terminal **(Figure 10-37, (5))**.
4. Connect a voltmeter **(Figure 10-37, (7))** to the battery negative (-) terminal **(Figure 10-37, (5))** and the main positive (+) battery terminal **(Figure 10-37, (3))** on the starter motor.

5. Install a switch **(Figure 10-37, (6))** in a circuit between the battery positive (+) terminal **(Figure 10-37, (2))** and the starter solenoid switch terminal **(Figure 10-37, (8))** on the starter motor.
6. Use a suitable tachometer to monitor the rpm of the starter.
7. Turn the switch to the ON position to energize the solenoid and operate the starter. Monitor the rpm, amperage draw and voltage. For test specifications, see *Starter Motor Information on page 10-5* for the appropriate starter motor.

Installation of Starter Motor

1. Reinstall the starter motor to the flywheel housing.
2. Reinstall the starter mounting bolts **(Figure 10-38, (1))**. Tighten the bolts to specification. *See Tightening Torques for Standard Bolts and Nuts on page 4-22.*

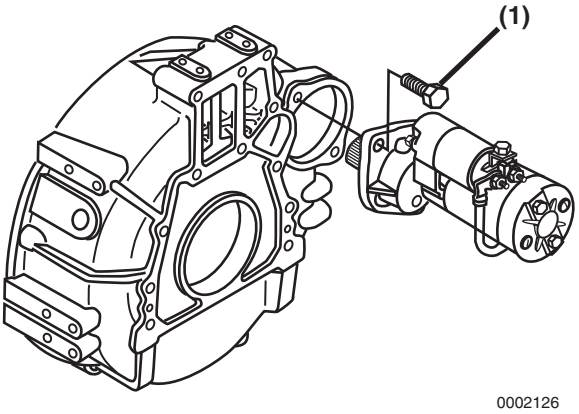

Figure 10-38

3. Reconnect the electrical wires to the solenoid switch assembly. Be sure to place the cover over the battery positive (+) cable connection.
4. Reconnect the battery, negative (-) cable last.

Section 11

ALTERNATOR

Page

Before You Begin Servicing 11-3
Introduction 11-6
Standard and Optional Dynamo Information 11-6
Standard and Optional Alternator Information 11-6
Alternator Specifications 11-6
Dynamo Specifications 11-7
Alternator Troubleshooting 11-8
Alternator Components 11-9
Alternator Wiring Diagram 11-10
Alternator Standard Output 11-11
Alternator 11-12
- Removal of Alternator 11-12
- Disassembly of Alternator 11-12
- Reassembly of Alternator 11-14
- Installation of Alternator 11-16

Dynamo Component Location 11-17
Dynamo Wiring Diagram 11-18
Operation of Dynamo 11-18
Dynamo Standard Output 11-19
Testing of Dynamo 11-20
- Testing Stator Coil Continuity 11-20
- Testing Stator Coil Short-to-Ground 11-20
- Testing Dynamo Regulated Output 11-20

Dynamo 11-20
Removal of Dynamo 11-20
Disassembly of Dynamo 11-21
Reassembly of Dynamo 11-21
Installation of Dynamo 11-22

BEFORE YOU BEGIN SERVICING

⚠ WARNING



ENTANGLEMENT HAZARD!

- Stop the engine before you begin to service it.
- NEVER leave the key in the key switch when you are servicing the engine. Someone may accidentally start the engine and not realize you are servicing it. This could result in a serious injury.
- If you must service the engine while it is operating, remove all jewelry, tie back long hair, and keep your hands, other body parts and clothing away from moving / rotating parts.
- Failure to comply could result in death or serious injury.

0000010en

⚠ WARNING



SHOCK HAZARD!

- Turn off the battery switch (if equipped) or disconnect the negative battery cable before servicing the electrical system.
- Check the electrical harnesses for cracks, abrasions, and damaged or corroded connectors. ALWAYS keep the connectors and terminals clean.
- Failure to comply could result in death or serious injury.

0000009en

⚠ WARNING



BURN HAZARD!

- Keep your hands and other body parts away from hot engine surfaces such as the muffler, exhaust pipe, turbocharger (if equipped) and engine block during operation and shortly after you shut the engine down. These surfaces are extremely hot while the engine is operating and could seriously burn you.
- Failure to comply could result in death or serious injury.

0000015en

⚠ WARNING



FUME / BURN HAZARD!

- Always read and follow safety related precautions found on containers of hazardous substances like parts cleaners, primers, sealants and sealant removers.
- Failure to comply could result in death or serious injury.

0000014en

⚠ CAUTION



FLYING OBJECT HAZARD!

- ALWAYS wear eye protection when servicing the engine and when using compressed air or high-pressure water. Dust, flying debris, compressed air, pressurized water or steam may injure your eyes.
- Failure to comply may result in minor or moderate injury.

0000003en

⚠ CAUTION

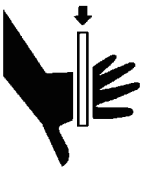

PINCH HAZARD!

Carefully rotate the alternator toward the cylinder block while loosening the V-belt. Failure to comply may result in minor or moderate injury.

0000014en

CAUTION



NEVER permit anyone to operate the engine or driven machine without proper training.

- Read and understand this Operation Manual before you operate or service the machine to ensure that you follow safe operating practices and maintenance procedures.
- Machine safety signs and labels are additional reminders for safe operating and maintenance techniques.
- See your authorized Yanmar industrial engine dealer or distributor for additional training.

0000002en

CAUTION

Do not short-circuit the charging system between alternator terminals IG and L. Damage to the alternator will result.

0000035en

CAUTION

Do not connect a load between alternator terminals L and E. Damage to the alternator will result.

0000036en

CAUTION

Do not operate the engine if the alternator is producing unusual sounds. Damage to the alternator will result.

0000039en

CAUTION

Do not remove the positive (+) battery cable from alternator terminal B while the engine is operating. Damage to the alternator will result.

0000037en

CAUTION

Do not turn the battery switch OFF while the engine is operating. Damage to the alternator will result.

0000038en

CAUTION

Do not reverse the positive (+) and negative (-) ends of the battery cable. The alternator diode and stator coil will be damaged.

0000050en

CAUTION

When the battery indicator goes out, it should not come on again. The battery indicator only comes on during operation if the alternator fails. However, if an LED is used in the battery indicator, the LED will shine faintly during normal operation.

0000051en

CAUTION

Using a non-specified V-belt will cause inadequate charging and shorten the belt life. Use the specified belt.

0000052en

CAUTION

Agricultural or other chemicals, especially those with a high sulfur content, can adhere to the IC regulator. This will corrode the conductor and result in battery over-charging (boiling) and charging malfunctions. Consult Yanmar before using the equipment in such an environment or the warranty is voided.

0000053en

CAUTION

Do not use a high-pressure wash directly on the alternator. Water will damage the alternator and result in inadequate charging.

0000049en

INTRODUCTION

This section of the *Service Manual* describes the servicing of the dynamos and alternators. Yanmar Part No. 129423-77200 alternator is used in this section to show the service procedures for the representative alternator. Yanmar Part No. 171301-77201 dynamo is used in this section to show the service procedures for the representative dynamo. For specific part detail, see the *Parts Catalog* for the engine you are working on.

STANDARD AND OPTIONAL DYNAMO INFORMATION

YANMAR Part Number	Mfg.	Mfg. Part Number	Specification
171301-77201	Kokusan	GP8138	DC12V-15A
119910-77200	Kokusan	GP9191	DC12V-20A

STANDARD AND OPTIONAL ALTERNATOR INFORMATION

YANMAR Part Number	Mfg.	Mfg. Part Number	Specification
119620-77201	Denso	100211-4531	DC12V-40A
129423-77200	Denso	101211-1170	DC12V-40A with Pulse
129961-77200	Denso	101211-2591	DC12V-55A
119626-77210	Denso	101211-2951	DC12V-55A with Pulse

ALTERNATOR SPECIFICATIONS

Yanmar Part Number	129423-77200
Nominal Output (13.5 Volts Heat)	40 Amps
Weight	6.17 lb (2.8 kg)
Revolution Direction (As Viewed From Pulley)	Clockwise
Rating	Continuous
Battery Voltage	12 Volts
Rated Revolution	5000 rpm (min^{-1})
Operating Range	1350 - 18000 rpm (min^{-1})
Grounding Characteristics	Negative (-) Side of Circuit
Integrated Regulator	IC Regulator
Outside Diameter of Pulley	2.724 in. (69.2 mm)
Belt Shape	Type A

DYNAMO SPECIFICATIONS

Yanmar Part Number		119910-77200
Nominal Output		20 Amps
Weight		3.97 lb (1.8 kg)
Revolution Direction (As Viewed From Pulley)		Clockwise
Rating		Continuous
Battery Voltage		12 Volts
Rated Revolution		3500 rpm
Operating Range		1400 - 6600 rpm
Grounding Characteristics		Negative (-) Side of Circuit
Regulator		Current Limiter (Part No. 119653-77710)
Outside Diameter of Pulley	A-Belt	2.56 in. (65 mm)
	Special M-Belt	2.28 in. (58 mm)
Belt Shape		Type A or Type Special M

ALTERNATOR TROUBLESHOOTING

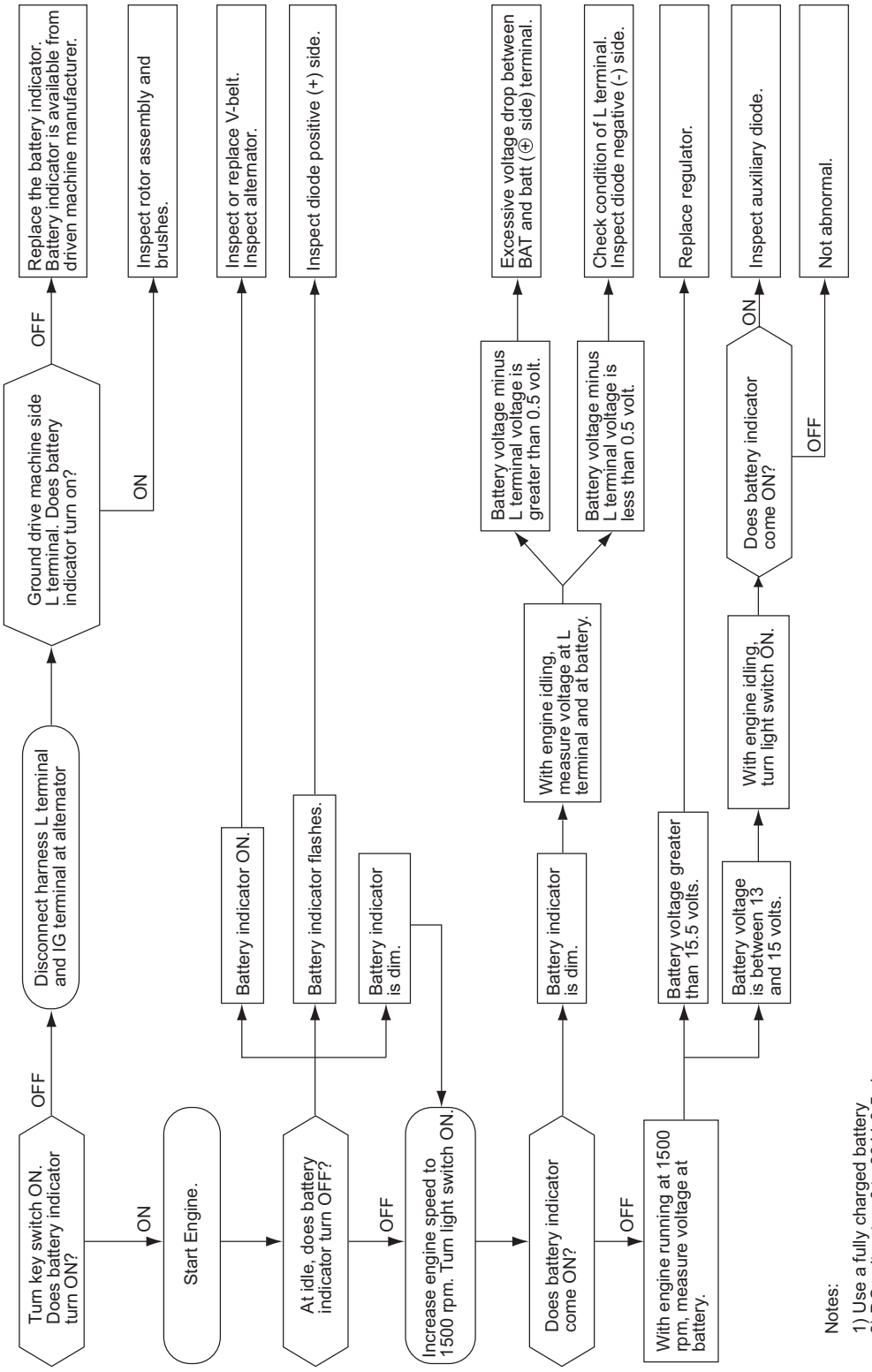

Notes:
1) Use a fully charged battery
2) DC voltmeter: 0 to 30 V, 0.5 class
3) The check method is also applicable to the bench test

ALTERNATOR COMPONENTS

Yanmar Part No. 129423-77200 alternator is used in this section to show the service procedures for the representative alternator. For specific part detail, see the *Parts Catalog* for the engine you are working on.

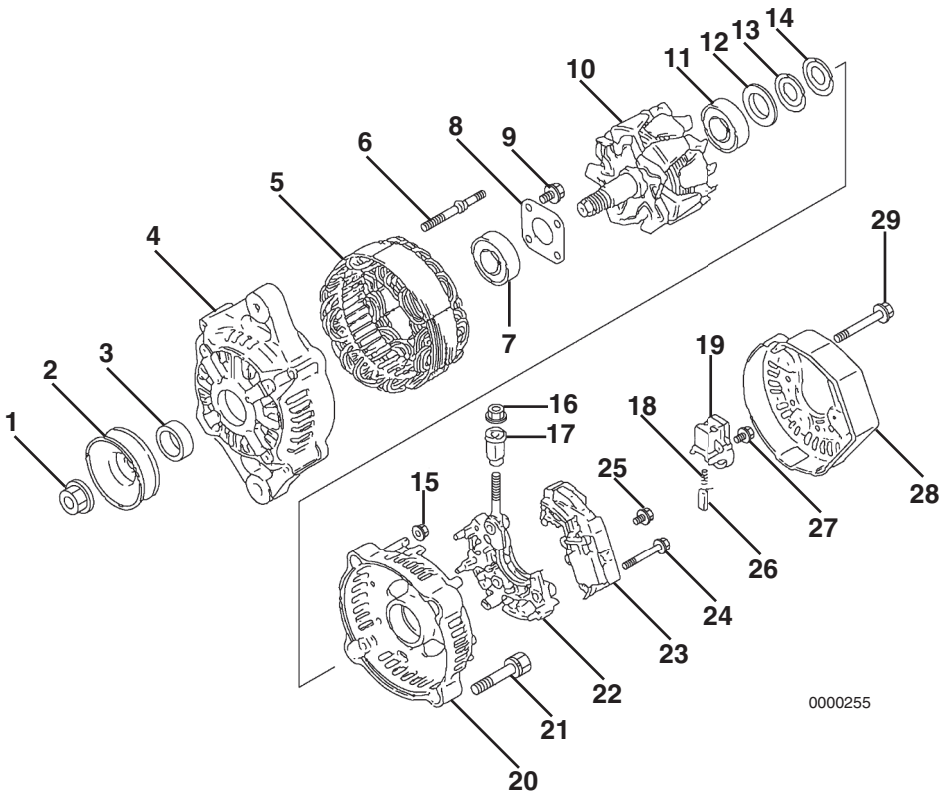

Figure 11-1

1 – Nut
2 – Pulley
3 – Collar
4 – Front Frame Housing
5 – Stator Assembly
6 – Stud (2 used)
7 – Front Frame Housing Bearing
8 – Bearing Cover
9 – Bearing Cover Bolt (4 used)
10 – Rotor Assembly
11 – Rear Frame Housing Bearing
12 – Bearing Cover
13 – Thrust Washer
14 – Thrust Washer
15 – Nut (2 used)
16 – Nut
17 – Insulation Bushing
18 – Spring (2 used)
19 – Brush Holder
20 – Rear Frame Housing
21 – Bolt (2 used)
22 – Holder
23 – IC Regulator Assembly
24 – Bolt (2 used)
25 – Bolt
26 – Brush (2 used)
27 – Bolt
28 – Rear Cover
29 – Bolt (3 used)

ALTERNATOR WIRING DIAGRAM

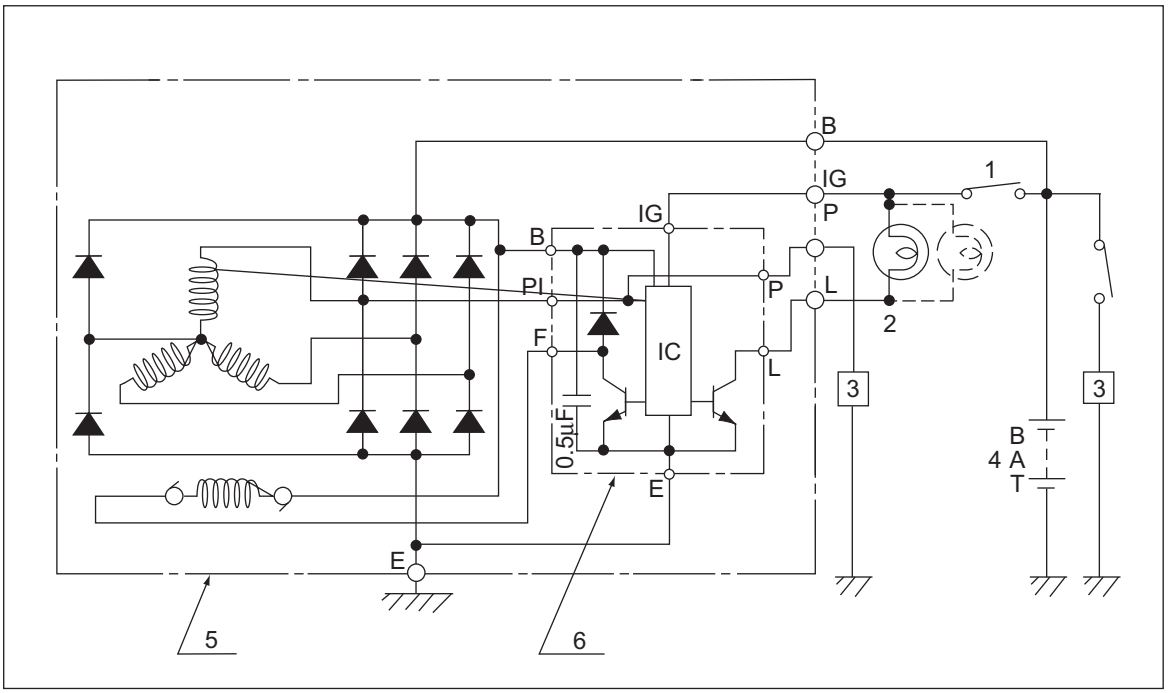

1 – Key Switch
2 – Charge Lamp (3.4 Watts Max.)
3 – Load
4 – Battery
5 – Alternator Assembly
6 – IC Regulator Assembly

Figure 11-2

CAUTION

Do not short-circuit the charging system between alternator terminals IG and L. Damage to the alternator will result.

0000035en

CAUTION

Do not connect a load between alternator terminals L and E. Damage to the alternator will result.

0000036en

CAUTION

Do not remove the positive (+) battery cable from alternator terminal B while the engine is operating. Damage to the alternator will result.

0000037en

ALTERNATOR STANDARD OUTPUT

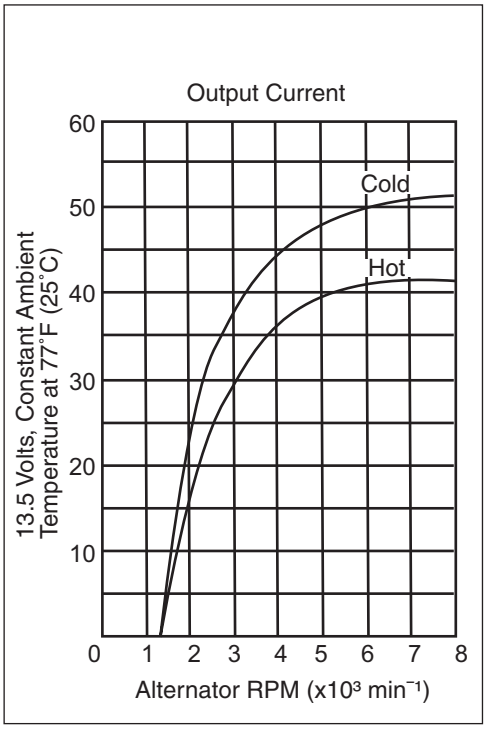

Figure 11-3

ALTERNATOR

⚠ WARNING



SHOCK HAZARD!

- **Turn off the battery switch (if equipped) or disconnect the negative battery cable before servicing the electrical system.**
- **Check the electrical harnesses for cracks, abrasions, and damaged or corroded connectors. ALWAYS keep the connectors and terminals clean.**
- **Failure to comply could result in death or serious injury.**

0000009en

Removal of Alternator

1. Disconnect the electrical wires from the alternator.
2. Loosen the V-belt.

⚠ CAUTION



PINCH HAZARD!

Carefully rotate the alternator toward the cylinder block while loosening the V-belt. Failure to comply may result in minor or moderate injury.

0000014en

3. Remove the V-belt adjuster from the alternator bolt **(Figure 11-4, (1))**.
4. Remove the nut **(Figure 11-4, (2))** from the gear case stud. Remove the alternator.

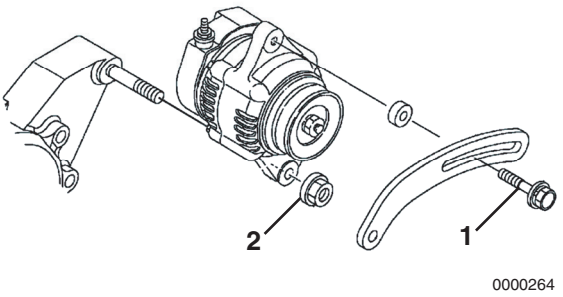

Figure 11-4

Disassembly of Alternator

1. Remove the nut **(Figure 11-5, (1))** from the shaft of the rotor assembly. Remove the pulley **(Figure 11-5, (2))**.

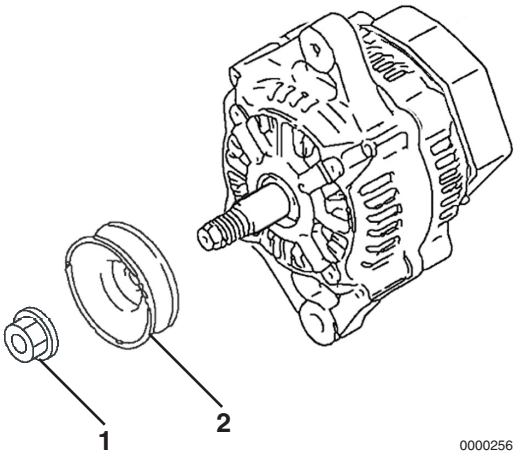

Figure 11-5

2. Remove the three bolts **(Figure 11-6, (1))** retaining the rear cover **(Figure 11-6, (2))** to the rear frame assembly.

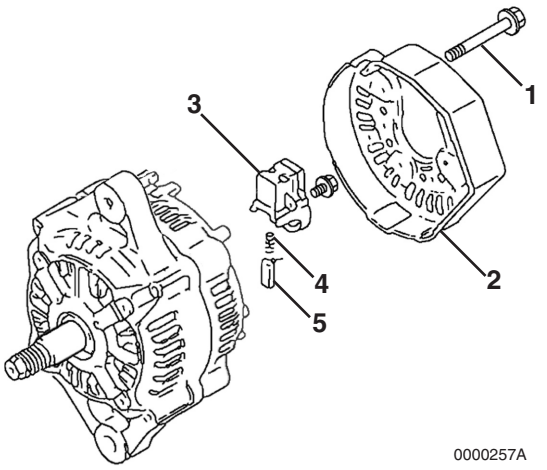

Figure 11-6

3. Remove the brush holder **(Figure 11-6, (3))**. Remove the brush springs **(Figure 11-6, (4))** and brushes **(Figure 11-6, (5))**.
4. Remove the bolt retaining the regulator assembly **(Figure 11-7, (1))** to the holder **(Figure 11-7, (2))**.

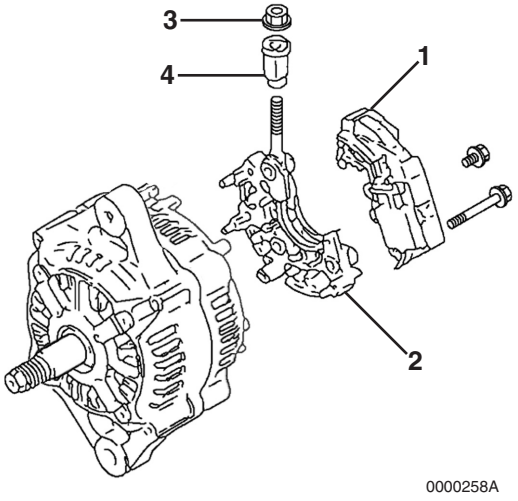

Figure 11-7

5. Remove the bolts retaining the holder **(Figure 11-7, (2))** to the rear frame housing. Remove the holder.
6. Remove the nut **(Figure 11-7, (3))** retaining the insulation bushing **(Figure 11-7, (4))**. Remove the insulation bushing.
7. Remove the two bolts **(Figure 11-8, (1))** and two nuts **(Figure 11-8, (2))** securing the rear frame housing to the front frame housing.

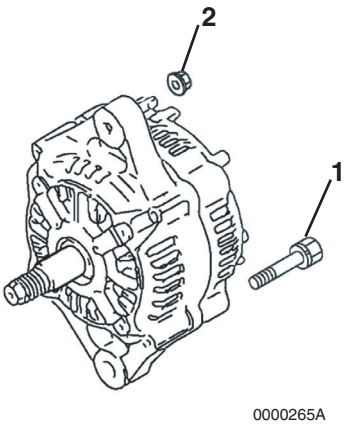

Figure 11-8

8. Using a press, remove the rotor assembly **(Figure 11-9, (1))** from the front frame housing **(Figure 11-9, (2))** and rear frame housing **(Figure 11-10, (1))**.

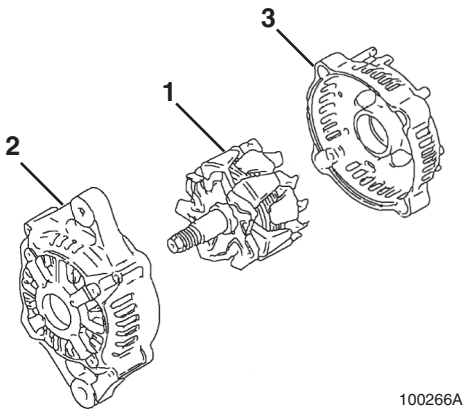

Figure 11-9

9. Remove the stator assembly **(Figure 11-10, (1))** from the front frame housing.

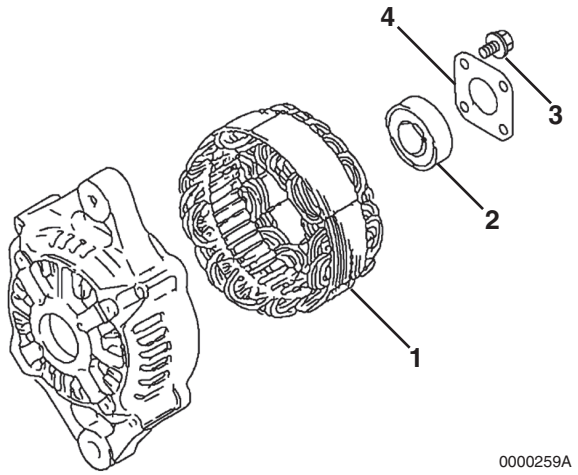

Figure 11-10

10. If it is necessary to replace the bearing **(Figure 11-10, (2))** in the front frame housing, remove the four bolts **(Figure 11-10, (3))** securing the plate **(Figure 11-10, (4))** to the front frame housing. Remove the plate. Use a puller to remove the bearing. Discard the bearing.
11. If it is necessary to replace the bearing **(Figure 11-11, (1))** in the rear frame housing, use a puller to remove. Discard the bearing. Remove the bearing cover **(Figure 11-11, (2))** and two thrust washers **(Figure 11-11, (3))**.

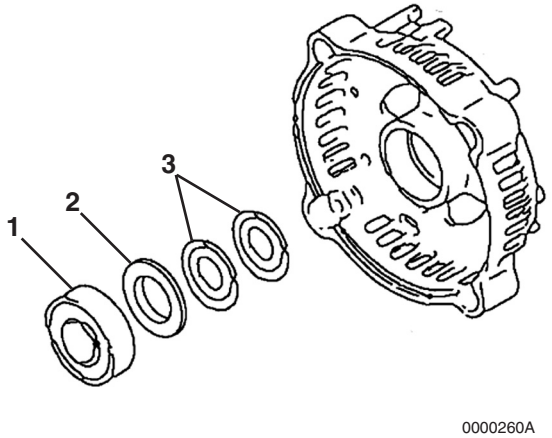

Figure 11-11

Reassembly of Alternator

1. If removed, reinstall the two thrust washers **(Figure 11-12, (3))** and bearing cover **(Figure 11-12, (2))** in the rear frame housing. Lubricate the outside diameter of a new bearing **(Figure 11-12, (1))**. Press the bearing into the rear frame housing.

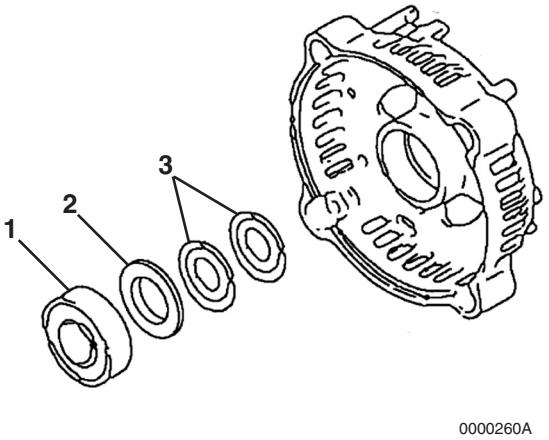

Figure 11-12

2. If removed, lubricate the outside diameter of a new front frame housing bearing. Press the bearing **(Figure 11-13, (2))** into the front frame housing. Reinstall the plate **(Figure 11-13, (4))** to the front housing. Tighten the four bolts **(Figure 11-13, (3))**.

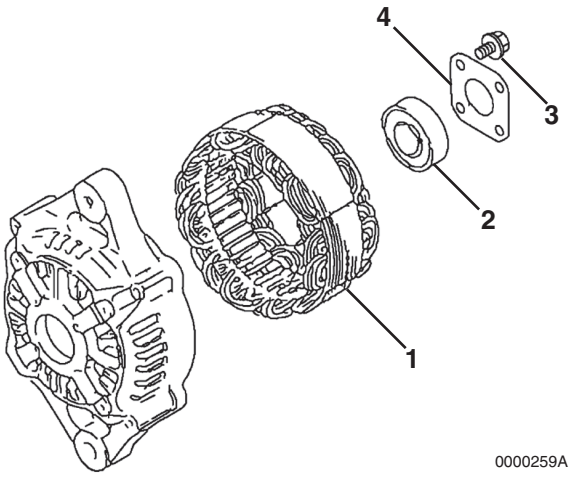

Figure 11-13

3. Position the stator assembly **(Figure 11-13, (1))** on the front frame housing studs.
4. Lubricate the shaft of the rotor assembly **(Figure 11-14, (1))**. Press the rotor assembly into the front frame housing **(Figure 11-14, (2))** and rear frame housing **(Figure 11-14, (3))**.

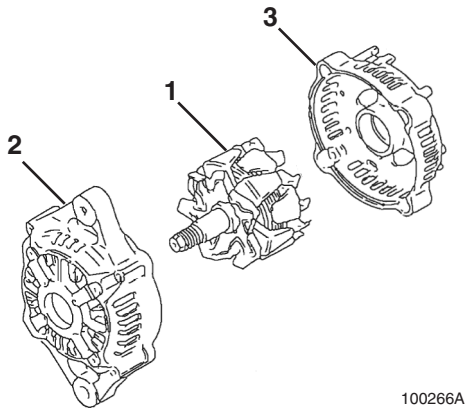

Figure 11-14

5. Align the front frame housing with the rear frame housing. Reinstall the two bolts **(Figure 11-15, (1))** and two nuts **(Figure 11-15, (2))**.

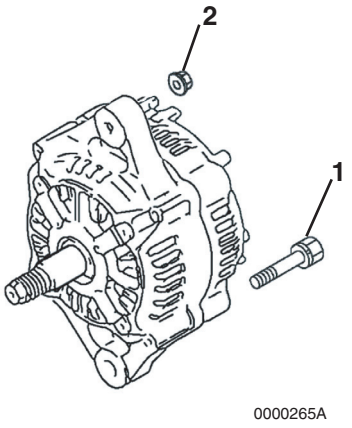

Figure 11-15

6. Reinstall the insulation bushing **(Figure 11-16, (4))** and nut **(Figure 11-16, (3))**.

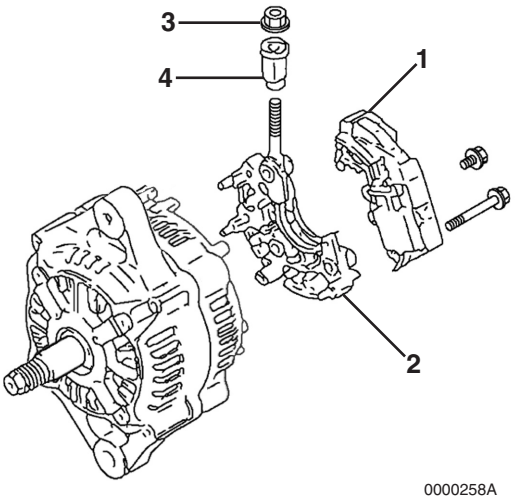

Figure 11-16

7. Reassemble the regulator assembly **(Figure 11-16, (1))** to the holder **(Figure 11-16, (2))**.
8. Reinstall the brush holder **(Figure 11-17, (3))**, springs **(Figure 11-17, (4))** and brushes **(Figure 11-17, (5))**.
9. Reattach the regulator assembly and holder to the rear frame housing.

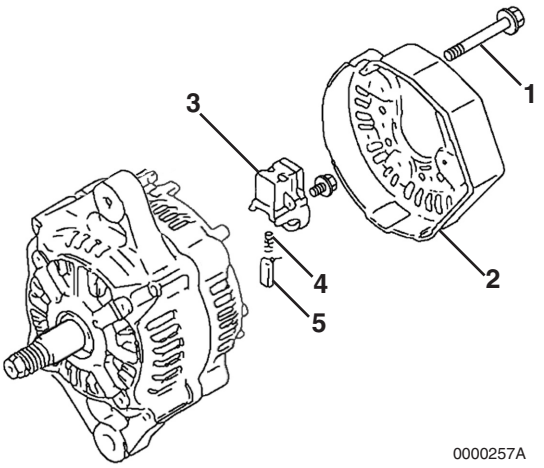

Figure 11-17

10. Reinstall the rear cover **(Figure 11-17, (2))** to the rear frame housing with three bolts **(Figure 11-17, (1))**.

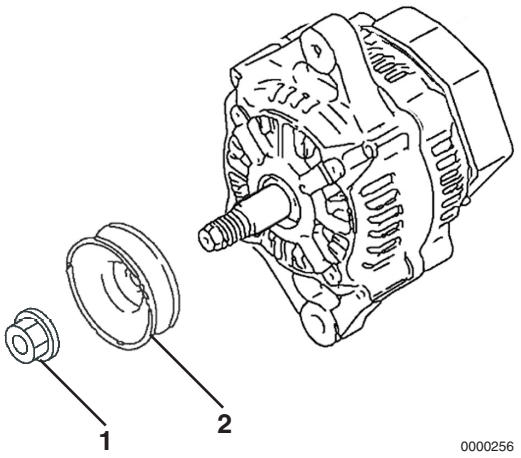

Figure 11-18

11. Reassemble the pulley **(Figure 11-18, (2))** and nut **(Figure 11-18, (1))** to the shaft of the rotor assembly. Tighten the nut.

Installation of Alternator

1. Position the alternator on the gear case. Loosely reinstall the nut **(Figure 11-19, (2))** on the gear case stud and the V-belt adjuster bolt **(Figure 11-19, (1))**.

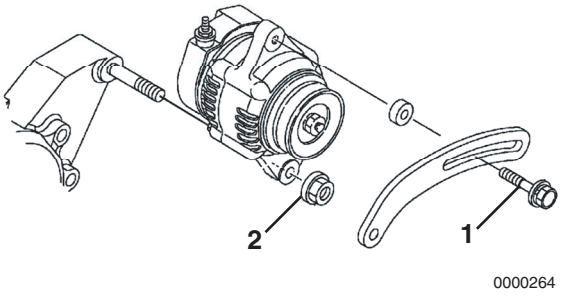

Figure 11-19

2. Reconnect the electrical wires to the alternator. Tighten the nuts to 15 - 20 in.-lb (1.7-2.3 N·m; 17-23 kgf·m).
3. Reinstall the V-belt. Tighten the V-belt to the proper tension. *See Check and Adjust Cooling Fan V-Belt on page 5-27.*
4. Start the engine. Listen for any unusual sounds from the alternator.

CAUTION

Do not operate the engine if the alternator is producing unusual sounds. Damage to the alternator will result.

0000039en

5. Verify that the charge indicator is ON while the engine is operating. If the charge indicator is not ON, repair the problem before operating the engine.

DYNAMO COMPONENT LOCATION

Yanmar Part No. 171301-77201 dynamo is used in this section to show the service procedures for the representative dynamo. For specific part detail, see the *Parts Catalog* for the engine you are working on.

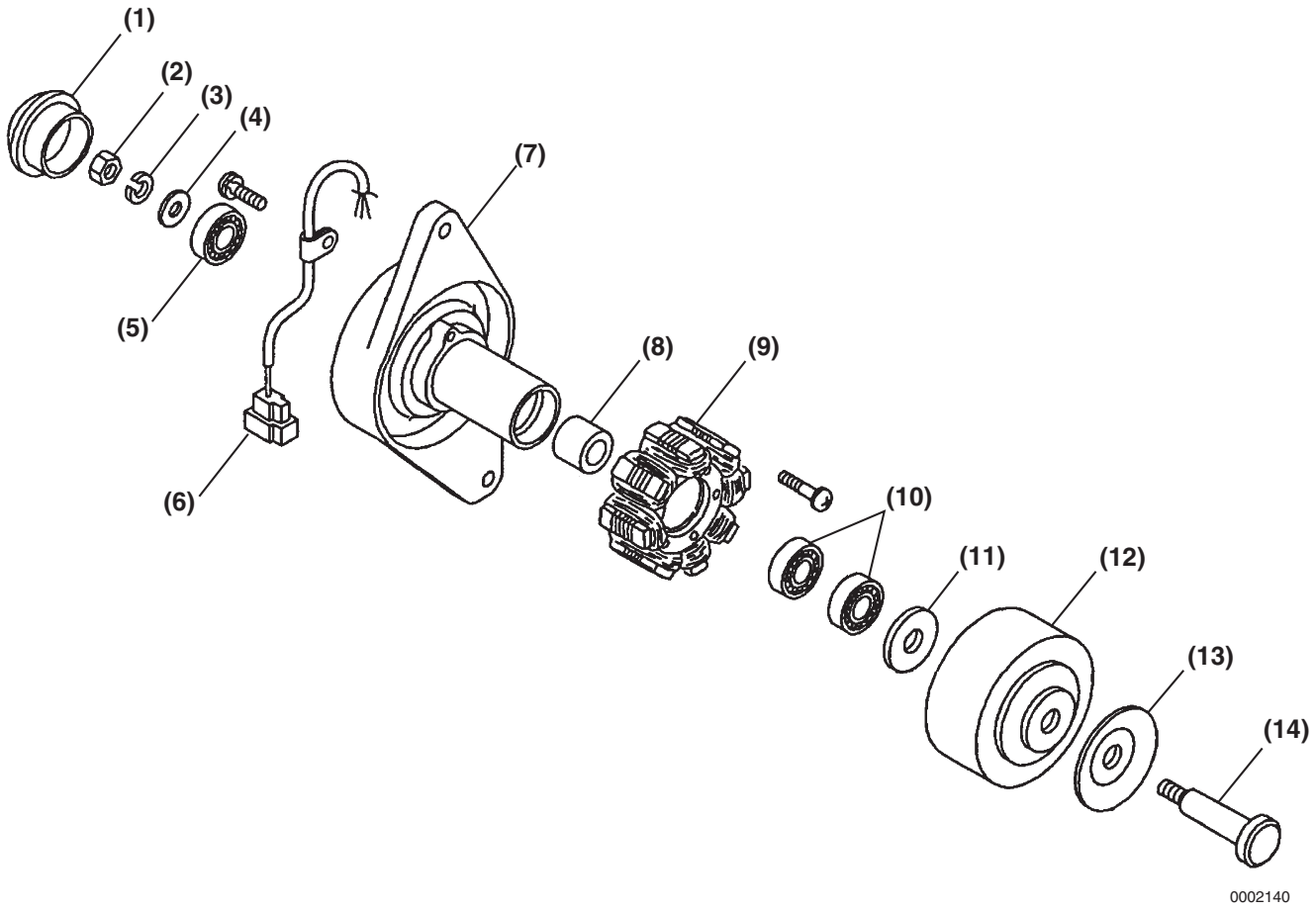

Figure 11-20

1 – Rear Cover
2 – Nut
3 – Lock Washer
4 – Flat Washer
5 – Rear Bearing
6 – Output Wire and Connector
7 – Plate
8 – Spacer
9 – Stator Assembly
10 – Front Bearing (2 used)
11 – Flat Washer
12 – Flywheel Assembly
13 – Pulley Half
14 – Through Bolt

DYNAMO WIRING DIAGRAM

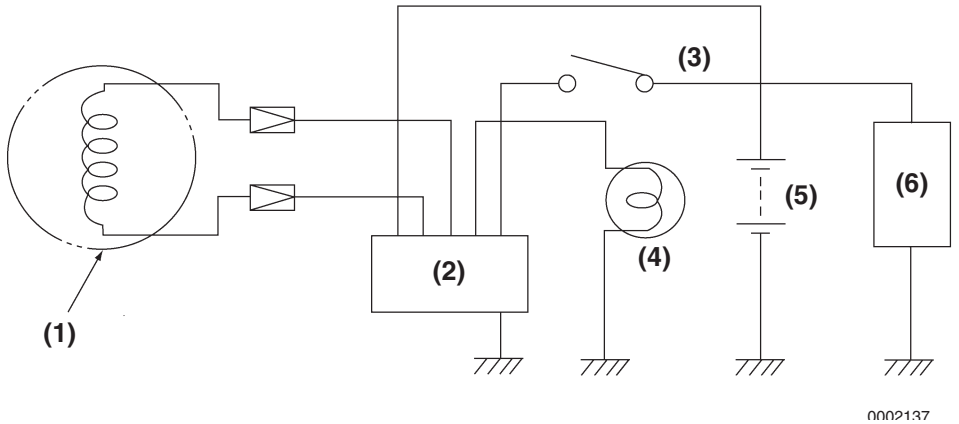

Figure 11-21

1 – Dynamo
2 – Current Limiter Assembly
3 – Key Switch
4 – Charge Lamp (3.4 Watts Max.)
5 – Battery
6 – Load

OPERATION OF DYNAMO

The dynamo consists of a series of permanent magnets that rotate around a stationary stator coil. The magnets are attached to the flywheel which is rotated via the engine cooling fan drive belt. The resultant output is an AC (alternating current) signal. The AC is converted to DC (direct current) by the current limiter. The current limiter outputs charging DC current to the battery.

DYNAMO STANDARD OUTPUT

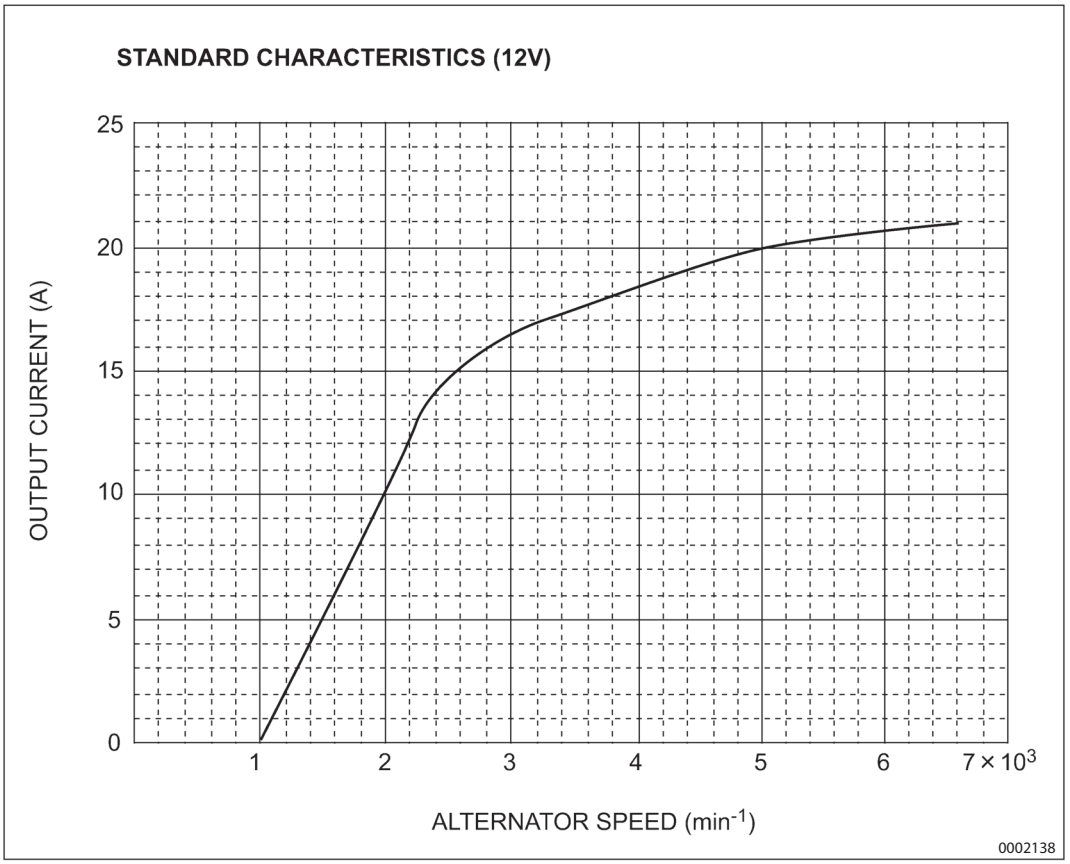

Figure 11-22

TESTING OF DYNAMO

Use a circuit tester or multimeter to perform the following tests.

Testing Stator Coil Continuity

1. Disconnect the dynamo output wire connector.
2. Connect one meter lead to each of the stator wire terminals and read the meter.

Results: The meter reading should indicate continuity. If continuity is not indicated, the windings are open and the stator must be replaced.

Testing Stator Coil Short-to-Ground

1. Disconnect the dynamo output wire connector.
2. Test continuity between each stator wire terminal and engine ground.

Results: The meter reading should indicate infinity. If the meter reading indicates continuity, the windings are shorted to ground and the stator must be replaced.

Testing Dynamo Regulated Output

1. Test and record the battery voltage with the engine OFF.
2. Start the engine and operate it at normal operating rpm.
3. Check the battery voltage with the engine running.

Results: The meter reading with the engine running must be higher than with the engine not running.

- If results are not correct, test the stator for continuity and shorts to the ground.
- Check the charging system wiring.
- If no problems are found in previous checks, replace the IC regulator.

DYNAMO

Removal of Dynamo

1. Disconnect the output wire connector from the dynamo.
2. Loosen the V-belt.

⚠ CAUTION

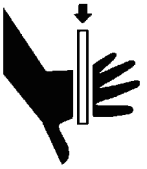

PINCH HAZARD!

Carefully rotate the alternator toward the cylinder block while loosening the V-belt. Failure to comply may result in minor or moderate injury.

0000014en

3. Remove the V-belt adjuster from the dynamo bolt **(Figure 11-23, (1))**.
4. Remove the nut **(Figure 11-23, (2))** from the gear case stud. Remove the dynamo.

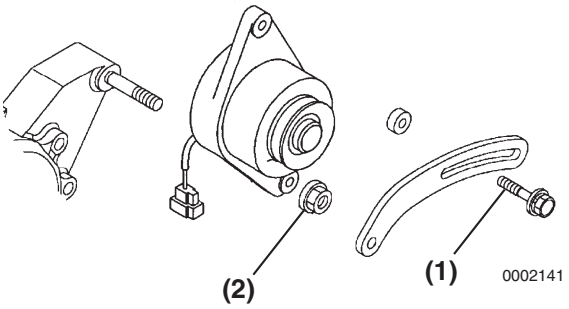

Figure 11-23

Disassembly of Dynamo

1. Remove the rear cover **(Figure 11-24, (1))**.
2. Remove the nut **(Figure 11-23, (2))**, lock washer **(Figure 11-24, (3))**, and flat washer **(Figure 11-24, (4))**.

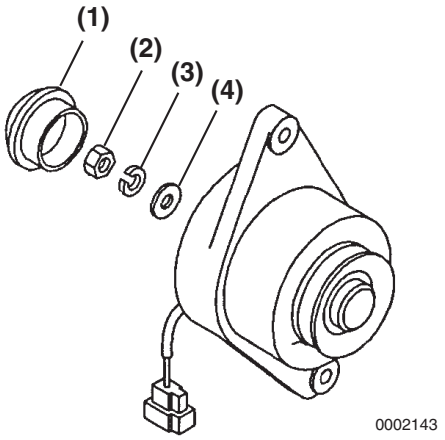

Figure 11-24

3. Remove the through bolt **(Figure 11-25, (1))**, pulley half **(Figure 11-25, (2))**, flywheel **(Figure 11-25, (3))**, flat washer **(Figure 11-25, (4))**, bearings **(Figure 11-25, (5))**, and spacer **(Figure 11-25, (6))**.

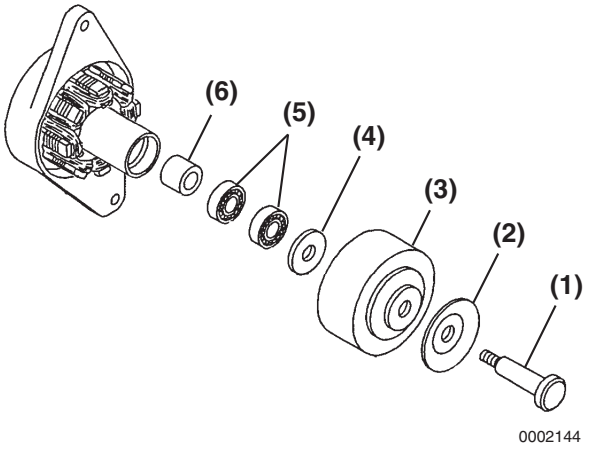

Figure 11-25

4. Remove the screws **(Figure 11-26, (1))** and the stator assembly **(Figure 11-26, (2))**.
5. Remove the rear bearing **(Figure 11-26, (3))**.

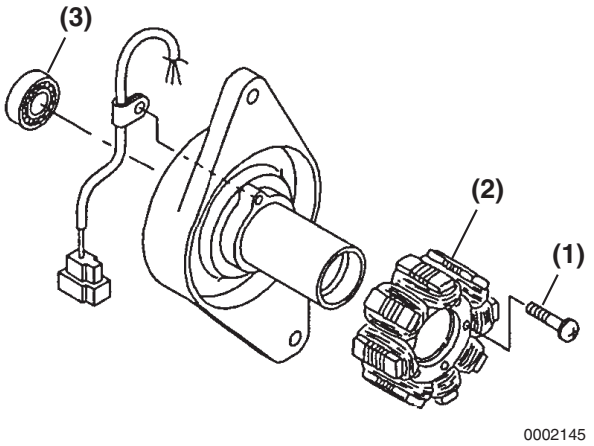

Figure 11-26

Reassembly of Dynamo

1. Reinstall the rear bearing **(Figure 11-26, (3))**.
2. Reinstall the stator **(Figure 11-26, (1))**.
3. Reinstall screws **(Figure 11-26, (1))**.
4. Reinstall the front bearings **(Figure 11-27, (5))** and spacer **(Figure 11-27, (6))**.
5. Reinstall the flat washer **(Figure 11-27, (4))**, flywheel **(Figure 11-27, (3))**, pulley half **(Figure 11-27, (2)**, and through bolt **(Figure 11-27, (1))**.

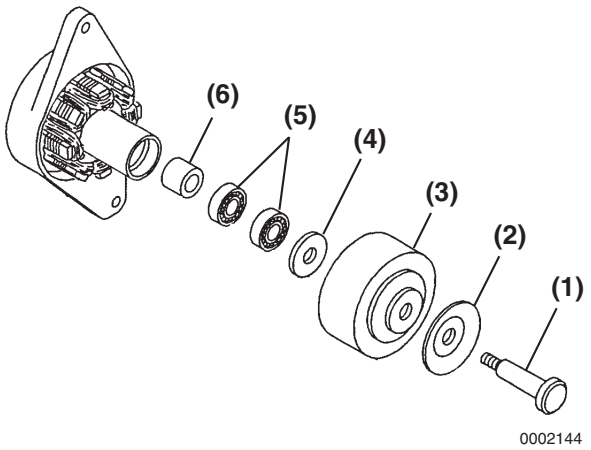

Figure 11-27

6. Reinstall the flat washer **(Figure 11-28, (4))**, lock washer **(Figure 11-28, (3))**, and nut **(Figure 11-28, (2))**. Tighten the nut to the specified torque.
7. Reinstall the rear cap **(Figure 11-28, (1))**.

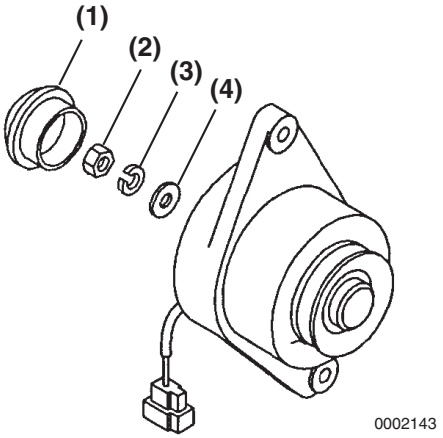

Figure 11-28

Installation of Dynamo

1. Position the dynamo on the gear case. Loosely reinstall the nut **(Figure 11-29, (2))** on the gear case stud and the V-belt adjuster bolt **(Figure 11-29, (1))**.

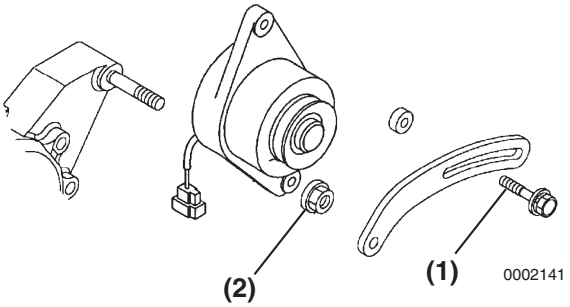

Figure 11-29

2. Reconnect the dynamo output wire connector.
3. Reinstall the V-belt. Tighten the V-belt to the proper tension. *See Check and Adjust Cooling Fan V-Belt on page 5-27.*
4. Start the engine. Listen for any unusual sounds from the alternator.

CAUTION

Do not operate the engine if the alternator is producing unusual sounds. Damage to the alternator will result.

0000039en

5. Verify that the charge indicator is ON while the engine is operating. If the charge indicator is not ON, repair the problem before operating the engine.

Section 12

ELECTRIC WIRING

	Page
Electric Wiring Precautions	12-3
Electric Wire Resistance	12-4
Battery Cable Resistance	12-5
Electrical Wire Sizes - Voltage Drop	12-6
Conversion of AWG to European Standards	12-7

This Page Intentionally Left Blank

ELECTRIC WIRING PRECAUTIONS

Failure to follow these precautions may result in the failure of an electrical component and the loss of warranty coverage on that item as well as related items. Make sure that all users read and understand these precautions.

CAUTION

Do not reverse the positive (+) and negative (-) ends of the battery cable. The alternator diode and stator coil will be damaged.

0000050en

CAUTION

When the battery indicator goes out, it should not come on again. The battery indicator only comes on during operation if the alternator fails. However, if an LED is used in the battery indicator, the LED will shine faintly during normal operation.

0000051en

CAUTION

Make sure that the combined total resistance of the battery cable in both directions between the starter motor and the battery is within the value indicated in the *Battery Cable Resistance chart* in the *Electric Wiring Section* of this manual. The starter motor will malfunction and fail if the resistance is higher than the specified value.

0000057en

CAUTION

Removing the battery cables or the battery while the engine is operating may cause damage to the current limiter depending on the electrical equipment being used. This situation could cause loss of control of output voltage. The continuous high voltage of 23-24 volts (for 5000 rpm dynamo) will damage the current limiter and other electrical equipment.

0000058en

CAUTION

Reversing the battery cable connections at the battery or on the engine will destroy the SCR diode in the current limiter. This will cause the charging system to malfunction and may cause damage to the electrical harnesses.

0000059en

ELECTRIC WIRE RESISTANCE

AWG	Metric Nominal mm²	Ohms / Foot
20	0.5	0.009967
18	0.8	0.006340
16	1.25	0.004359
14	2	0.002685
12	3	0.001704
10	5	0.001073
8	8	0.000707
6	15	0.000421
4	20	0.000270
2	30	0.000158
1	40	0.000130
0 (1/0)	50	0.000103
00 (2/0)	60	0.000087
000 (3/0)	85	0.000066
0000 (4/0)	100	0.000051

Wiring voltage drop should not exceed 5% [0.05] x 12 Volts = 0.6 Volts.

Voltage Drop = Current [Amps] x Length of Wire [Feet] x Resistance per Foot [Ohms]

Example:

Current draw of 100 Amps x 3 feet of 4 AWG wire

100 Amps x 3 Feet x 0.000270 = 0.08 Volts [Voltage Drop]

BATTERY CABLE RESISTANCE

AWG	mm²	Maximum Total Battery Cable Length (Positive Cable + Negative Cable + a*) 12V Starter Motor Output			
		Less Than 2.68 hp (2 kW)		Greater Than 2.68 hp (2 kW)	
		m	ft	m	ft
6	15	1.5	4.75	N/A	N/A
4	20	2.3	7.4	N/A	N/A
2	30	3.8	12.6	2.3	7.5
1	40	4.6	15.3	2.8	9.2
0 (1/0)	50	5.9	19.5	3.5	11.6
00 (2/0)	60	7.0	22.8	4.2	13.7
000(3/0)	85	9.3	30.5	5.6	18.3
0000 (4/0)	100	11.9	39.0	7.1	23.4
00000 (5/0)	125	N/A	N/A	8.3	27.3
000000 (6/0)	150	N/A	N/A	10.1	33.3

Note: Total allowable resistance of the complete battery cable circuit (positive cable + negative cable + a*) (a*: Resistance (⦸) of a battery switch or other electrical equipment having high resistance)

Note: For starter motors of less than 2.68 HP (2 kW): the total resistance must be less than 0.002 Ω. For starter motors of greater than 2.68 HP (2 kW): the total resistance must be less than 0.0012 Ω.

ELECTRICAL WIRE SIZES - VOLTAGE DROP

Total current on circuit in amps.	Length of conductor from source of current to device and back to source (in feet)																		
	10	15	20	25	30	40	50	60	70	80	90	100	110	120	130	140	150	160	170
12 Volts	Wire Size (AWG)																		
5	18	16	14	12	12	10	10	10	8	8	8	6	6	6	6	6	6	6	6
10	14	12	10	10	10	8	6	6	6	6	4	4	4	4	2	2	2	2	2
15	12	10	10	8	8	6	6	6	4	4	2	2	2	2	2	1	1	1	1
20	10	10	8	6	6	6	4	4	2	2	2	2	1	1	1	0	0	0	2/0
25	10	8	6	6	6	4	4	2	2	2	1	1	0	0	0	2/0	2/0	2/0	3/0
30	10	8	6	6	4	4	2	2	1	1	0	0	0	2/0	2/0	3/0	3/0	3/0	3/0
40	8	6	6	4	4	2	2	1	0	0	2/0	2/0	3/0	3/0	3/0	4/0	4/0	4/0	4/0
50	6	6	4	4	2	2	1	0	2/0	2/0	3/0	3/0	4/0	4/0	4/0				
60	6	4	4	2	2	1	0	2/0	3/0	3/0	4/0	4/0	4/0						
70	6	4	2	2	1	0	2/0	3/0	3/0	4/0	4/0								
80	6	4	2	2	1	0	3/0	3/0	4/0	4/0									
90	4	2	2	1	0	2/0	3/0	4/0	4/0										
100	4	2	2	1	0	2/0	3/0	4/0											
24 Volts																			
5	18	18	18	16	16	14	12	12	12	10	10	10	10	10	8	8	8	8	8
10	18	16	14	12	12	10	10	10	8	8	8	6	6	6	6	6	6	6	6
15	16	14	12	12	10	10	8	8	6	6	6	6	6	4	4	4	4	4	2
20	14	12	10	10	10	8	6	6	6	6	4	4	4	4	2	2	2	2	2
25	12	12	10	10	8	6	6	6	4	4	4	4	2	2	2	2	2	2	1
30	12	10	10	8	8	6	6	4	4	4	2	2	2	2	2	1	1	1	1
40	10	10	8	6	6	6	4	4	2	2	2	2	1	1	1	0	0	0	2/0
50	10	8	6	6	6	4	4	2	2	2	1	1	0	0	0	2/0	2/0	2/0	3/0
60	10	8	6	6	4	4	2	2	1	1	0	0	0	2/0	2/0	3/0	3/0	3/0	3/0
70	8	6	6	4	4	2	2	1	1	0	0	2/0	2/0	3/0	3/0	3/0	3/0	4/0	4/0
80	8	6	6	4	4	2	2	1	0	0	2/0	2/0	3/0	3/0	3/0	4/0	4/0	4/0	4/0
90	8	6	4	4	2	2	1	0	0	2/0	2/0	3/0	3/0	4/0	4/0	4/0	4/0	4/0	
100	6	6	4	4	2	2	1	0	2/0	2/0	3/0	3/0	4/0	4/0	4/0				

CONVERSION OF AWG TO EUROPEAN STANDARDS

Conductor Size (AWG)	Conductor Diameter (mm)	Conductor Cross-sectional Area (mm^2)
25	0.455	0.163
24	0.511	0.205
23	0.573	0.259
22	0.644	0.325
21	0.723	0.412
20	0.812	0.519
19	0.992	0.653
18	1.024	0.823
17	1.15	1.04
16	1.29	1.31
15	1.45	1.65
14	1.63	2.08
13	1.83	2.63
12	2.05	3.31
11	2.30	4.15
10	2.59	5.27
9	2.91	6.62
8	3.26	8.35
7	3.67	10.6
6	4.11	13.3
5	4.62	16.8
4	5.19	21.2
3	5.83	26.7
2	6.54	33.6
1	7.35	42.4
0 (1/0)	8.25	53.4
00 (2/0)	9.27	67.5
000(3/0)	10.40	85.0
0000 (4/0)	11.68	107.2
00000 (5/0)	13.12	135.1
000000 (6/0)	14.73	170.3
1.1 circular mil (CM) ≅ 0.0005067 mm^2		

This Page Intentionally Left Blank

Section 13

TROUBLESHOOTING

	Page
Special Service Tools	13-3
Troubleshooting By Measuring Compression Pressure	13-4
Compression Pressure Measurement Method	13-4
Standard Compression Pressure	13-5
Engine Speed and Compression Pressure (Use for Reference)	13-5
Measured Value and Troubleshooting	13-6
Quick Reference Table For Troubleshooting	13-6
Troubleshooting Charts	13-7
Electric Wiring	13-19

This Page Intentionally Left Blank

SPECIAL SERVICE TOOLS

Compression Gauge Kit	For measuring compression pressure Yanmar Part No. TOL-97190080	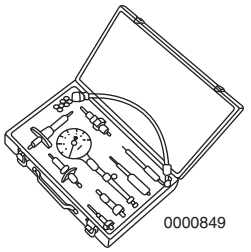

TROUBLESHOOTING BY MEASURING COMPRESSION PRESSURE

Compression pressure drop is one of major causes of increasing blow-by gas (engine oil contamination or increased engine oil consumption as a resultant phenomenon) or starting failure. The compression pressure is affected by the following factors:

1. Degree of clearance between piston and cylinder
2. Degree of clearance at intake / exhaust valve seat
3. Gas leak from nozzle gasket or cylinder head gasket

The pressure will drop due to increased parts wear. Pressure drop reduces the durability of the engine.

A pressure drop may also be caused by scratched cylinder or piston by dust entrance from the dirty air cleaner element or worn or broken piston ring. Measure the compression pressure to determine the condition of the engine.

Compression Pressure Measurement Method

1. Warm up the engine.
2. Stop the engine. Remove the high-pressure fuel injection lines as an assembly from the engine. *See Removal of High-Pressure Fuel Injection Lines on page 7-11.* Remove the fuel injector from the cylinder to be measured. *See Removal of Fuel Injectors on page 7-23.*

CAUTION

Remove or install the high-pressure fuel injection lines as an assembly whenever possible. Disassembling the high-pressure fuel injection lines from the retainers or bending any of the fuel lines will make it difficult to reinstall the fuel lines.

0000047en

3. Turn off the fuel supply valve in the fuel supply line. Disconnect the fuel injection stop solenoid at the connector. Crank the engine for a few seconds with the stop solenoid disconnected (no injection state) before installing the compression gauge adapter **(Figure 13-1, (1)),** this will expel any residual fuel from the cylinder.
4. Install one injector gasket at the tip end of the compression gauge adapter. Install the compression gauge and the compression gauge adapter at the cylinder to be measured.
5. Crank the engine until the compression gauge reading is stabilized.

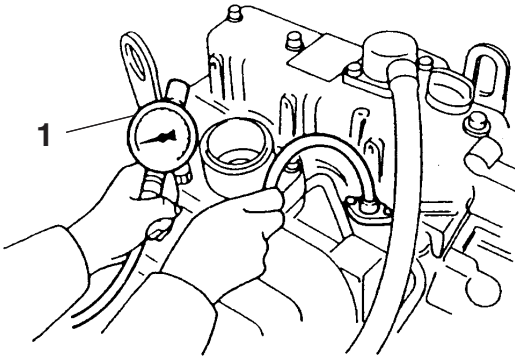

Figure 13-1

6. After performing the compression check, remove the compression gauge and compression gauge adapter from the cylinder. Reinstall the fuel injector, high-pressure fuel injection lines and reconnect the stop solenoid. *See Installation of the Fuel Injectors on page 7-29 and Installation of High-Pressure Fuel Injection Lines on page 7-12.*
7. Turn on the fuel supply valve and reconnect the injection pump stop solenoid.
8. Prime the fuel system. Check for leaks. Test the engine.

Standard Compression Pressure

Engine compression pressure list (reference value)

Engine Model	**Compression Pressure** at 250 rpm (250 min^{-1})		Deviation Between Cylinders
	Standard	Limit	
3TNV72	470 ± 15 psi (3.24 ± 0.1 MPa; 33 ± 1 kgf/cm^2)	370 ± 15 psi (2.55 ± 0.1 MPa; 26 ± 1 kgf/cm^2)	29 to 43 psi (0.2 to 0.3 MPa; 2 to 3 kgf/cm^2)

Engine Speed and Compression Pressure (Use for Reference)

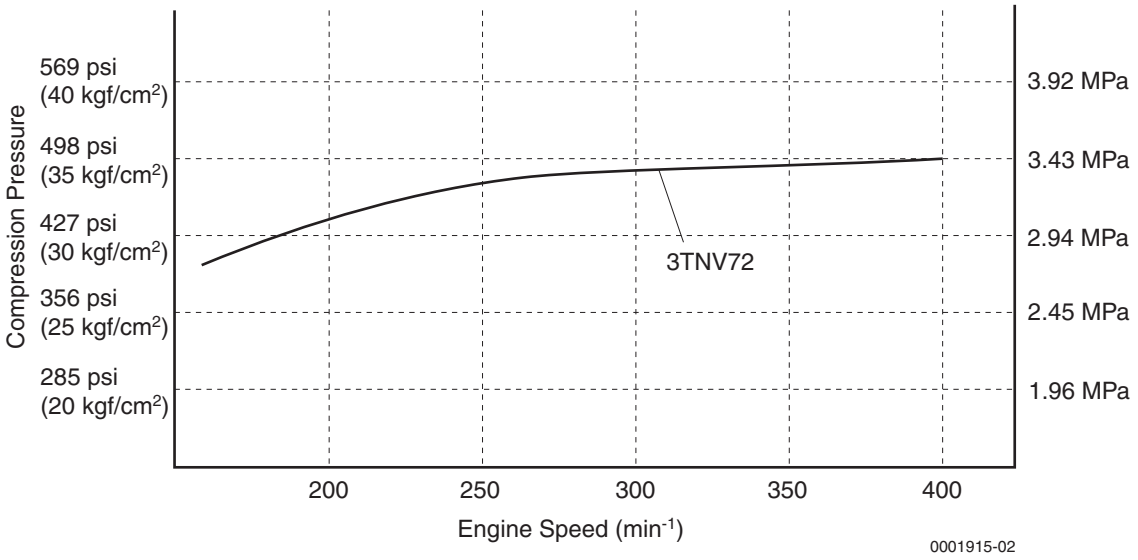

Figure 13-2

Measured Value and Troubleshooting

When the measured compression pressure is below the limit value, inspect each part by referring to the table below.

No.	Item	Cause	Corrective Action
1	Air Cleaner Element	Clogged element	Clean the element.
		Broken element	Replace the element.
		Defect at element seal portion	
2	Valve Clearance	Excessive or no clearance	Adjust the valve clearance.
3	Valve Timing	Incorrect valve clearance	Adjust the valve clearance.
4	Cylinder Head Gasket	Gas leak from gasket	Replace the gasket.
			Retighten the cylinder head bolts to the specified torque.
5	Intake / Exhaust Valve	Sticking valve	Replace the intake / exhaust valve.
	Valve Seat	Gas leak due to worn valve seat or foreign matter trapped in valve	Lap the valve seat.
6	Piston	Gas leak due to scratching or wear	Perform honing and use an oversized part.
	Piston Ring		
	Cylinder		

QUICK REFERENCE TABLE FOR TROUBLESHOOTING

The following table summarizes the general trouble symptoms and their causes. If any trouble symptom occurs, take corrective action before it becomes a serious problem so as not to shorten the engine service life.

Troubleshooting Charts

	Trouble Symptom / Cause	Starting Problem: Engine Does Not Start	Starting Problem: Engine Starts But Stops Soon. – Exhaust Smoke: None	Starting Problem: Engine Starts But Stops Soon. – Exhaust Smoke: Little	Starting Problem: Engine Starts But Stops Soon. – Exhaust Smoke: Much	Insufficient Engine Output – Exhaust Color: Ordinary	Insufficient Engine Output – Exhaust Color: White	Insufficient Engine Output – Exhaust Color: Black	Poor Exhaust Color – During Work: White	Poor Exhaust Color – During Work: Black	High Knocking Sound During Combustion	Abnormal Engine Sound	Uneven Combustion Sound	Engine Surging: During Idling	Engine Surging: During Work Operation	Excessive Engine Vibration	Difficulty in Returning to Low Speed	Excessive Fuel Consumption	Engine Oil: Excessive Oil Consumption	Engine Oil: Dilution by Diesel Fuel	Engine Oil: Oil with Water	Engine Oil: Low Oil Pressure	Excessive Blow-by Gas	Engine Coolant: Overheat	Engine Coolant: Low Water Temperature	Air Intake: Pressure Drop	Air Intake: Pressure Rise	Exhaust Temperature Rise	Corrective Action	Reference Page
Engine System	Improper Intake/Exhaust Valve Clearance	O	O			O						O														O		O	Adjust the Valve Clearance.	*See “Measuring and Adjusting Valve Clearance” on page 6-34.*
	Compression Leakage from Valve Seat					O		O		O		O						O					O					O	Lap the Valve Seat.	*See “Valve Face and Valve Seat” on page 6-28.*
	Intake/Exhaust Valve Seizure	O			O	O		O		O		O			O	O				O			O					O	Correct or Replace Intake/Exhaust Valve.	*See “Inspection of Intake and Exhaust Valves” on page 6-27.*
	Cylinder Head Gasket Blowout					O															O			O						Replace the Gasket.	*See “Disassembly of Cylinder Head” on page 6-21.*
	Seized or Broken Piston Ring	O			O		O		O			O		O		O			O	O			O	O					O	Replace the Piston Ring.	*See “Reassembly of Cylinder Head” on page 6-31.*
	Worn Piston Ring, Piston or Cylinder	O			O		O		O										O	O			O							Perform Honing and Use Oversize Parts.	*See “Honing and Boring” on page 6-53.*
	Seized Crankpin Metal or Bearing	O	O									O		O	O	O							O							Repair or Replace.	*See “Inspection of Crankshaft and Camshaft Components” on page 6-46.*
	Improper Arrangement of Piston Ring Gaps		O				O												O				O							Correct the Ring Joint Positions.	*See “Reassembly of Pistons” on page 6-55.*

This Page Intentionally Left Blank

	Trouble Symptom / Cause	Starting Problem: Engine Does Not Start.	Starting Problem: Engine Starts But Stops Soon. Exhaust Smoke: None	Starting Problem: Engine Starts But Stops Soon. Exhaust Smoke: Little	Starting Problem: Engine Starts But Stops Soon. Exhaust Smoke: Much	Insufficient Engine Output. Exhaust Color: Ordinary	Insufficient Engine Output. Exhaust Color: White	Insufficient Engine Output. Exhaust Color: Black	Poor Exhaust Color. During Work: White	Poor Exhaust Color. During Work: Black	High Knocking Sound During Combustion	Abnormal Engine Sound	Uneven Combustion Sound	Engine Surging: During Idling	Engine Surging: During Work Operation	Excessive Engine Vibration	Difficulty in Returning to Low Speed	Excessive Fuel Consumption	Engine Oil: Excessive Oil Consumption	Engine Oil: Dilution by Diesel Fuel	Engine Oil: Oil with Water	Engine Oil: Low Oil Pressure	Excessive Blow-by Gas	Engine Coolant: Overheat	Engine Coolant: Low Water Temperature	Air Intake: Pressure Drop	Air Intake: Pressure Rise	Exhaust Temperature Rise	Corrective Action	Reference Page
Engine System - Continued	Reverse Assembly of Piston Rings						O		O									O				O						Reassemble Correctly.	*See “Reassembly of Pistons” on page 6-55.*
	Worn Crankpin and Journal Bearing					O						O		O	O	O						O						Measure and Replace.	*See “Inspection of Crankshaft and Camshaft Components” on page 6-46.*
	Loose Connecting Rod Bolt											O				O						O						Tighten to the Specified Torque.	*See “” on page 6-14.*
	Foreign Matter Trapped in Combustion Chamber	O										O							O				O						Disassemble and Repair.	*See “Disassembly of Cylinder Block Components” on page 6-37.*
	Excessive Gear Backlash											O																	Adjust Gear Meshing.	*See “Checking Timing Gear Backlash” on page 6-38.*
	Worn Intake/Exhaust Valve Guide						O												O				O						Measure and Replace.	*See “Inspection of Valve Guides” on page 6-26.*
	Governor Adjusted Incorrectly		O											O	O	O	O												Make Adjustment.	*See “Check and Adjust the Governor Lever and Engine Speed Control” on page 5-27.*
	Improper Open/Close Timing of Intake/ Exhaust Valves	O					O	O	O	O		O																	Adjust the Valve Clearance.	*See “Measuring and Adjusting Valve Clearance” on page 6-34.*

This Page Intentionally Left Blank

	Trouble Symptom / Cause	Starting Problem: Engine Does Not Start.	Starting Problem: Engine Starts but Stops Soon. – Exhaust Smoke: None	Starting Problem: Engine Starts but Stops Soon. – Exhaust Smoke: Little	Starting Problem: Engine Starts but Stops Soon. – Exhaust Smoke: Much	Insufficient Engine Output – Exhaust Color: Ordinary	Insufficient Engine Output – Exhaust Color: White	Insufficient Engine Output – Exhaust Color: Black	Poor Exhaust Color – During Work: White	Poor Exhaust Color – During Work: Black	High Knocking Sound During Combustion	Abnormal Engine Sound	Uneven Combustion Sound	Engine Surging: During Idling	Engine Surging: During Work Operation	Excessive Engine Vibration	Difficulty in Returning to Low Speed	Excessive Fuel Consumption	Engine Oil: Excessive Oil Consumption	Engine Oil: Dilution by Diesel Fuel	Engine Oil: Oil with Water	Engine Oil: Low Oil Pressure	Excessive Blow-by Gas	Engine Coolant: Overheat	Engine Coolant: Low Water Temperature	Air Intake: Pressure Drop	Air Intake: Pressure Rise	Exhaust Temperature Rise	Corrective Action	Reference Page
Engine Coolant System	Excessive Radiator Cooling								O									O												*See “Disassembly of Engine Coolant Pump” on page 8-7.*
	Insufficient Radiator Cooling							O																O				O	Replace Thermostat or Check for Loose Fan Belt.	*See “Disassembly of Engine Coolant Pump” on page 8-7. or Check and Adjust Cooling Fan V-Belt on page 5-27*
	Insufficient Engine Coolant Level							O																O				O	Check Water Leakage from Engine Coolant System.	*See “Engine Coolant System Check” on page 8-7.*
	Cracked Water Jacket																				O	O		O					Repair or Replace.	*See “Disassembly of Engine Coolant Pump” on page 8-7.*
	Stretched Fan Belt							O																O				O	Adjust the Belt Tension.	*See “Check and Adjust Cooling Fan V-Belt” on page 5-19.*
	Defective Thermostat							O	O															O	O				Check or Replace.	*See “Disassembly of Engine Coolant Pump” on page 8-7.*
Engine Oil System	Incorrect Engine Oil	O	O			O												O			O	O							Use Correct Engine Oil.	*See “Engine Oil Specifications” on page 4-13.*
	Engine Oil System Leakage																	O			O								Repair.	*See “Disassembly of Oil Pump” on page 9-9.*
	Insufficient Delivery Capacity of Trochoid Pump																				O								Check and Repair.	*See “Disassembly of Oil Pump” on page 9-9.*
	Clogged Engine Oil Filter																				O	O							Clean or Replace.	*See “Replace Engine Oil and Engine Oil Filter” on page 5-26.*
	Defective Pressure Regulating Valve																				O								Clean, Adjust or Replace.	*See “Disassembly of Oil Pump” on page 9-9.*
	Insufficient Engine Oil Level		O																		O								Add Correct Engine Oil.	*See “Adding Engine Oil” on page 4-14.*
	Overfilled Engine Crankcase																				O								Check Engine Oil	See “Checking Engine Oil” on page 4-14.

This Page Intentionally Left Blank

Trouble Symptom / Cause		Starting Problem				Insufficient Engine Output			Poor Exhaust Color		High Knocking Sound During Combustion	Abnormal Engine Sound	Uneven Combustion Sound	Engine Surging		Excessive Engine Vibration	Difficulty in Returning to Low Speed	Excessive Fuel Consumption	Engine Oil				Excessive Blow-by Gas	Engine Coolant		Air Intake		Exhaust Temperature Rise	Corrective Action	Reference Page
		Engine Does Not Start.	Engine Starts but Stops Soon.			Exhaust Color			During Work					During Idling	During Work Operation				Excessive Oil Consumption	Dilution by Diesel Fuel	Oil with Water	Low Oil Pressure		Overheat	Low Water Temperature	Pressure Drop	Pressure Rise			
			Exhaust Smoke																											
			None	Little	Much	Ordinary	White	Black	White	Black																					
Fuel System	Too Early Timing of Fuel Injection Pump									O	O					O													Check and Adjust.	*See “Checking and Adjusting Fuel Injection Timing” on page 7-19.*
	Too Late Timing of Fuel Injection Pump						O		O									O										O	Check and Adjust.	*See “Checking and Adjusting Fuel Injection Timing” on page 7-19.*
	Incorrect Diesel Fuel					O	O	O	O	O			O																	Use Correct Fuel Oil.	*See “Diesel Fuel Specifications” on page 4-9.*
	Water in Fuel System	O			O		O		O				O	O	O															Draining the Fuel Filter.	*See “Drain Fuel Filter / Water Separator” on page 5-21.*
	Clogged Fuel Filter	O	O			O																								Clean or Replace.	*See “Drain Fuel Filter / Water Separator” on page 5-21.*

This Page Intentionally Left Blank

	Trouble Symptom / Cause	Starting Problem: Engine Does Not Start.	Starting Problem: Engine Starts but Stops Soon. – Exhaust Smoke: None	Starting Problem: Engine Starts but Stops Soon. – Exhaust Smoke: Little	Starting Problem: Engine Starts but Stops Soon. – Exhaust Smoke: Much	Insufficient Engine Output – Exhaust Color: Ordinary	Insufficient Engine Output – Exhaust Color: White	Insufficient Engine Output – Exhaust Color: Black	Poor Exhaust Color – During Work: White	Poor Exhaust Color – During Work: Black	High Knocking Sound During Combustion	Abnormal Engine Sound	Uneven Combustion Sound	Engine Surging: During Idling	Engine Surging: During Work Operation	Excessive Engine Vibration	Difficulty in Returning to Low Speed	Excessive Fuel Consumption	Engine Oil: Excessive Oil Consumption	Engine Oil: Dilution by Diesel Fuel	Engine Oil: Oil with Water	Engine Oil: Low Oil Pressure	Excessive Blow-by Gas	Engine Coolant: Overheat	Engine Coolant: Low Water Temperature	Air Intake: Pressure Drop	Air Intake: Pressure Rise	Exhaust Temperature Rise	Corrective Action	Reference Pages
Fuel System	Air in Fuel System	O	O			O																						Bleed the Air.	*See “Priming the Fuel System” on page 4-12.*
	Clogged or Cracked Fuel Line	O	O			O																						Clean or Replace.	*See “Check and Replace Fuel Hoses and Engine Coolant Hoses” on page 5-37.*
	Insufficient Fuel Supply to Fuel Injection Pump	O	O			O																						Check the Fuel Tank Cock, Fuel Filter, Fuel Line, and Fuel Feed Pump.	*See the appropriate procedure in Periodic Maintenance on page 5-1*
	Uneven Injection Volume from Fuel Injection Pump						O	O	O	O			O	O	O	O											O	Check and Adjust.	*See “Testing of Fuel Injectors” on page 7-24.*
	Excessive Fuel Injection Volume									O							O	O				O	O			O	O	Check and Adjust.	*See “Testing of Fuel Injectors” on page 7-24.*
	Poor Spray Pattern from Fuel Injection Nozzle						O	O	O	O			O	O	O	O		O										Check and Adjust.	*See “Testing of Fuel Injectors” on page 7-24.*
	Priming Failure	O																										Foreign Matter Trapped in the Valve Inside the Priming Pump (Disassemble and Clean).	*See “Fuel System Components” on page 7-10.*
	Clogged Strainer at Feed Pump Inlet					O																						Clean the Strainer.	*See “Drain Fuel Tank” on page 5-25.*

This Page Intentionally Left Blank

	Trouble Symptom / Cause	Starting Problem: Engine Does Not Start.	Starting Problem: Engine Starts but Stops Soon. – Exhaust Smoke: None	Starting Problem: Engine Starts but Stops Soon. – Exhaust Smoke: Little	Starting Problem: Engine Starts but Stops Soon. – Exhaust Smoke: Much	Insufficient Engine Output – Exhaust Color: Ordinary	Insufficient Engine Output – Exhaust Color: White	Insufficient Engine Output – Exhaust Color: Black	Poor Exhaust Color – During Work: White	Poor Exhaust Color – During Work: Black	High Knocking Sound During Combustion	Abnormal Engine Sound	Uneven Combustion Sound	Engine Surging: During Idling	Engine Surging: During Work Operation	Excessive Engine Vibration	Difficulty in Returning to Low Speed	Excessive Fuel Consumption	Engine Oil: Excessive Oil Consumption	Engine Oil: Dilution by Diesel Fuel	Engine Oil: Oil with Water	Engine Oil: Low Oil Pressure	Excessive Blow-by Gas	Engine Coolant: Overheat	Engine Coolant: Low Water Temperature	Air Intake: Pressure Drop	Air Intake: Pressure Rise	Exhaust Temperature Rise	Corrective Action	Reference Pages
Air/Exhaust Gas System	Clogged Air Filter				O			O		O			O													O			Clean Air Filter.	*See “Clean Air Cleaner Element” on page 5-28.*
	Engine Used at High Temperatures or at High Altitude							O		O								O						O		O			Study Output Drop and Load Matching.	
	Clogged Exhaust Pipe							O		O			O															O	Clean Exhaust Pipe.	
Electrical System	Starting Motor Defect	O																											Repair or Replace Stater Motor.	*See “Starter Motor” on page 10-9.*
	Alternator Defect	O																											Repair or Replace Alternator.	*See “Removal of Alternator” on page 11-12. or Removal of Dynamo on page 11-20*
	Open-Circuit in Wiring	O																											Repair Open Circuit.	
	Battery Voltage Drop	O																											Inspect and Change the Battery.	*See “Check Battery” on page 5-23.*

This Page Intentionally Left Blank

ELECTRIC WIRING

Note: The following wiring diagram is “representative” of a common installation using a Yanmar engine. The actual installation may be equipped with a variety of electrical components and wiring harnesses. Contact the machine manufacturer for specific information.

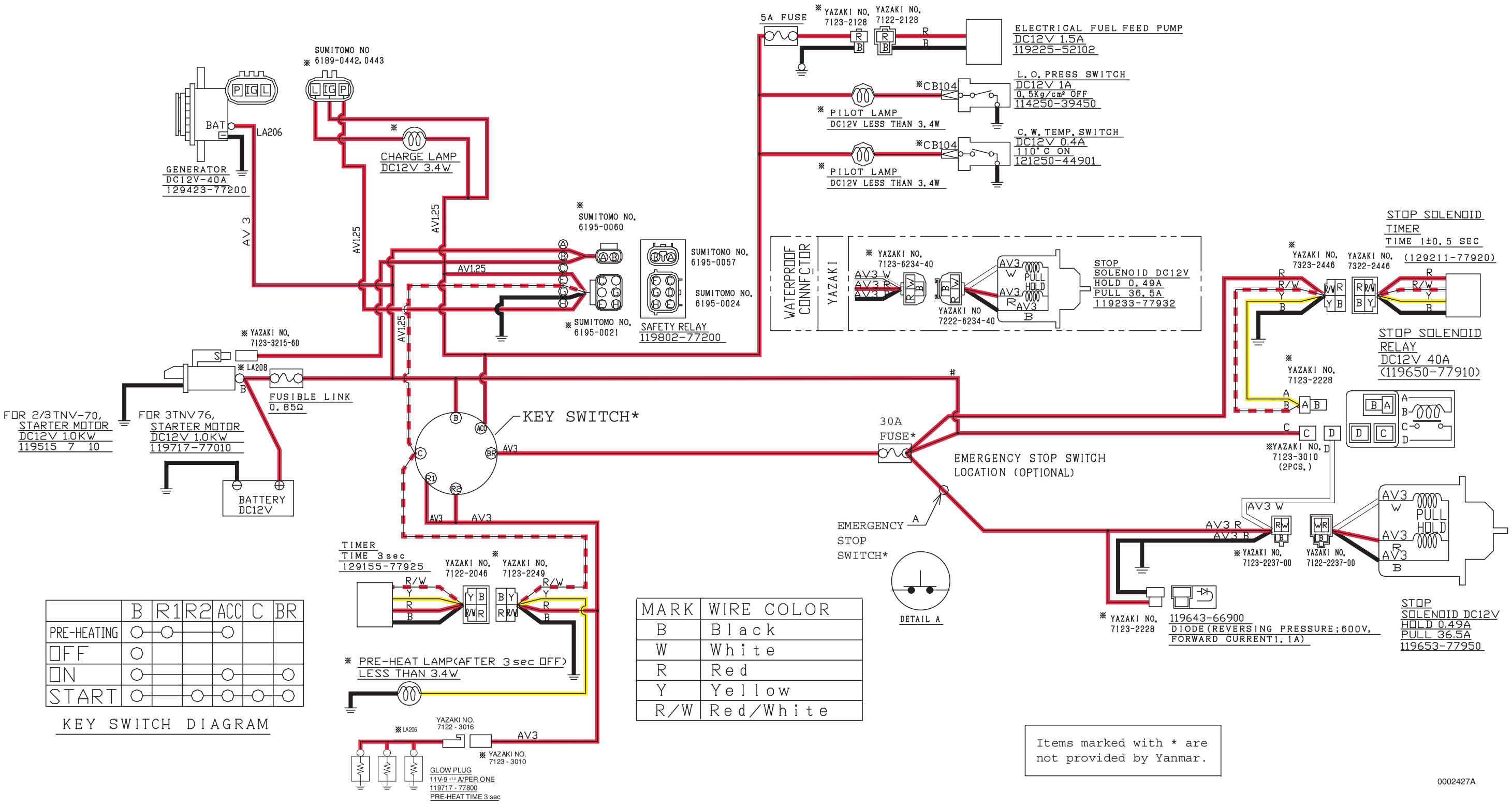

	B	R1	R2	ACC	C	BR
PRE-HEATING	○	○		○		
OFF	○					
ON	○			○		○
START	○		○	○	○	○

KEY SWITCH DIAGRAM

MARK	WIRE COLOR
B	Black
W	White
R	Red
Y	Yellow
R/W	Red/White

Items marked with * are not provided by Yanmar.

0002427A

This Page Intentionally Left Blank

4. ELECTRICAL

Table of Contents

1 General Information ……4-3
1-1 Electrical Diagram Information ……...4-3
1-2 Circuit Diagnosis Information ……...4-4
1-3 Common Circuit Tests ……4-4
2 Electrical System Specifications ……4-5
3 Component Location ……4-6
4 System Component ……4-8
5 Circuit Diagnosis ……..4-9
5-1 Cranking Circuit Diagnosis ……...4-9
5-2 Charging Circuit Diagnosis ……..4-17
5-3 Prreheating Circuit Diagnosis ……...4-21
5-4 Fuel Supply and Stop Circuit Diagnosis ……..4-25
5-5 Instrument Panel Circuit Diagnosis ……...4-36
5-6 Light Circuit Diagnosis ……..4-44
5-7 PTO Stop Circuit Diagnosis ……..4-52
5-8 Other Circuit ……4-58
6 Diagnosis and replacement work
for electrical components ……4-62
6-1 General ……...4-62
6-2 Engine ……4-62
6-3 Charging ……..4-62
6-4 Light ……..4-63

1 General Information

1-1 Electrical Diagram Information

A connection diagram consists of an individual circuit arranged by a series of functions related to. It is formed in electrical conducting wire. All parts are shown at off position.
Each device and component is shown by a symbol and name. Every wire has a unique number and alphabet series.

E11	**5**	**WR**		**G10C**	**0.5**	**B**		**B24A**	**1.25**	**Br**
(1)	(2)	(3)		(1)	(2)	(3)		(1)	(2)	(3)

(1) means the name of wire. The name consists of one alphabet (B, E, G, L, P, S) and two numbers. If the name has one alphabet after two numbers, it means the wire is divided on the way.
(2) The number in the center of the series shows the dimensions. The unit is mm^2. If you need American Wire Gauge # (AWG #), please see the table.

WIRE DIMENSION and AWG #

Dimension (mm^2)	AWG #
0.5	20
0.85	18
1.25	16
2	14
3	12
5	10
15	5
20	4

(3) means the color of the wire. Please refer to WIRE COLOR CHART. Two capital alphabet shows the stripe pattern of the wire. For example, "WR" is red stripe on white ground.

WIRE COLOR CHART

W	WHITE
B	BLACK
R	RED
Y	YELLOW
G	GREEN
L	BLUE
Br	BROWN
Lg	LIGHT GREEN
O	ORANGE
P	PINK
WR is (W)hite cable with (R)ed stripe. BY is (B)lack cable with (Y)ellow stripe.	

1-2 Circuit Diagnosis Information

In this section, there is the explanation that how the circuit works. Each circuit is devided depending on the function.

When this circuit works:
this description indicates that the switch or lever position when the circuit works.

When the test is done:
this description indicates the necessary preparation for the test.

Result: GOOD
this description indicates the electrical component is no problem.

If the result is NOT GOOD:
this description indicates the countermeasure against this issue.

1-3 Common Circuit Tests

Shorted Circuit:
A short-circuiting may be a result of operation of a wrong component (In other words contact between inappropriate wires.)

1 Turn on the switch of component.
2 Begin at the switch of the component that should not be in operation.
3 Following the circuit, disconnect a wire in a connector until the component stops working.
4 The short circuit should be found between the last two connections that had been disconnected.

High Resistance or Open Circuit:
Each part does not work or the response is slow or the lights are dim in high resistance or an open circuit (In other words it is no connection or corroded or bad.) When each part is operating, the voltage of a component is low. Do the inspection for high resistance and an open circuit.

1 Check all terminals and grounds for corrosion, intermittent or loose connections.
2 The problem can usually be found in a component or the wiring harness if there is no corrosion, intermittent or loose connections at terminal connectors.

Ground Circuit:
Usually is indicated by a blown fuse or less of component operation or function.

2 Electrical System Specifications

Battery

Type	Maintenance Free Type
Voltage	12 V
BCI Group	26R
Cold Cranking Amps at -18 DEG.C (0 DEG.F)	540 CCA
Reserve Capacity 25 Amps @ 80 Deg. F	80 Min.
Specific Gravity (at 68 Deg.F)	1.265
Electrolyte Required Fill (Approx.)	2.7 Liters
Load Test (minimum) maintaining voltage of 9.6 or greater	270 amps for 15 seconds

(Open circuit voltage must be 12.4 volts or greater (75% SOC) in order to properly load test a lead acid battery.)

Starting Motor

Type	Solenoid Shift
Nominal Output	1.2 kW
Amp Draw (with load)	280A (MAX) at 900 rpm
Amp Draw (without load)	90A (MAX) at 3,000 rpm

Alternator

Regulated Voltage at 25 DEG. C (77 DEG. F)	14.2 - 14.8 V
Regulator Type	Internal, IC - Regulator

Fuel Shut Off Solenoid

Voltage	12 VDC
Pull - In Amperage	36.5 A
Hold Amperage	0.49 A

Sensors

Engine Coolant Temperature Switch	On at 230 ± 5 □ (110 ± 3 □)
Engine Oil Pressure Switch	Off at 50 kPa
Brake Pedal Switch and Reverse Switch	Off at 2.9 lbs (13 N)
HST Neutral Switch and Seat Switch	On at 2.9 lbs (13 N)

Fuel Gauge

Fuel Gauge Resistance (Variable)	3 (±2) to 110 (±7) Ω

Lighting

Headlight	30 W
Tail Light	5.0 W
Side Light	15 W
Turn/Hazzard Light	27 W
Instrument Panel Light (except Meter Light)	2.0 W
Meter Light	1.4 W

3 Component Location

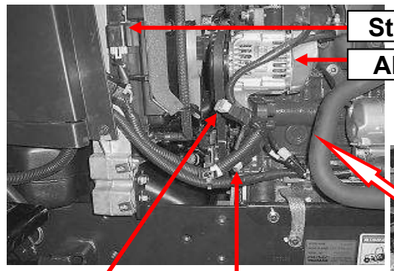

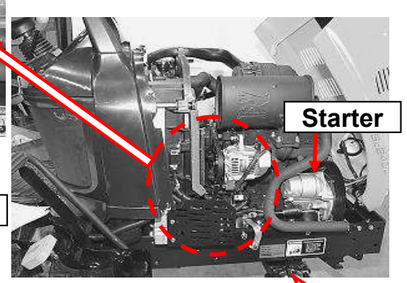

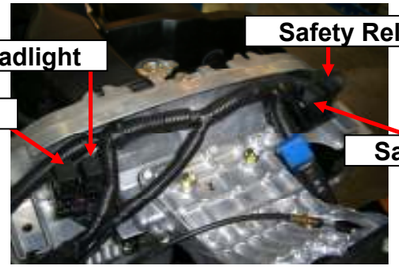

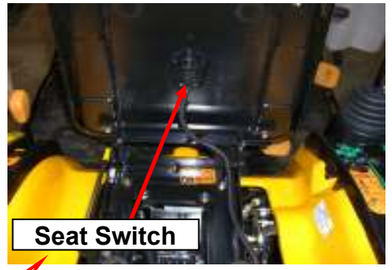



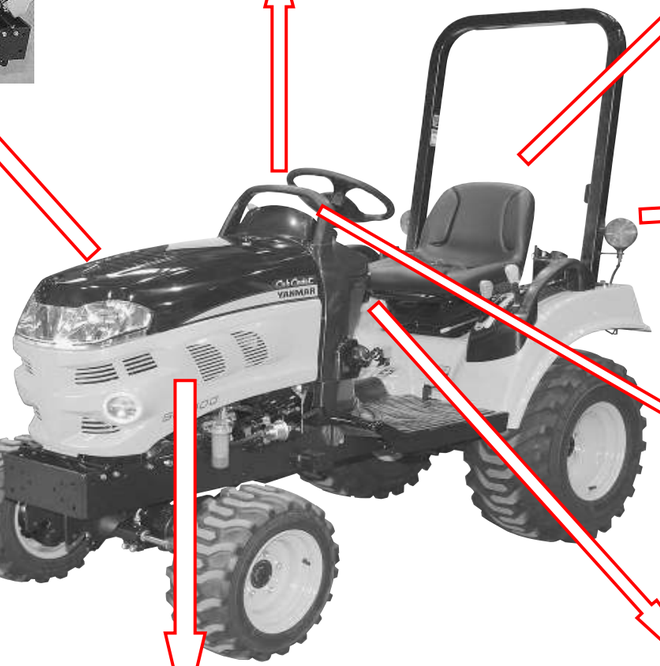

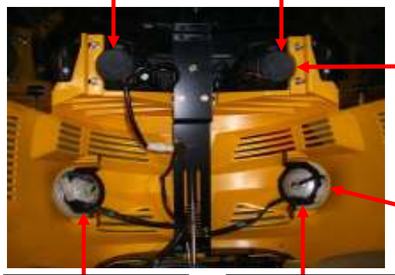



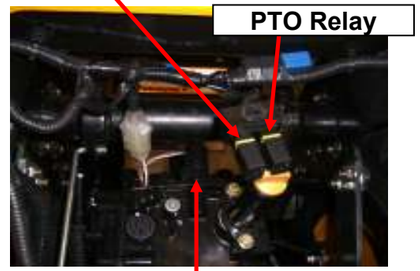

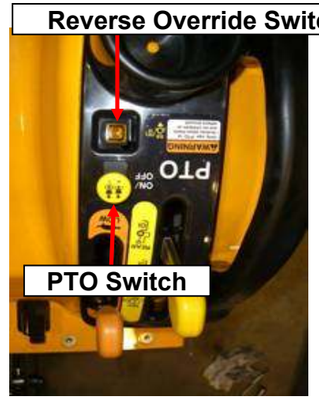

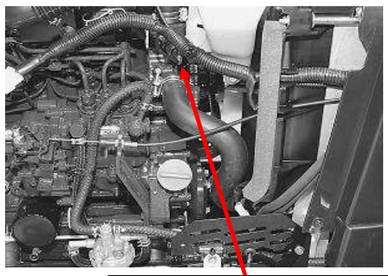

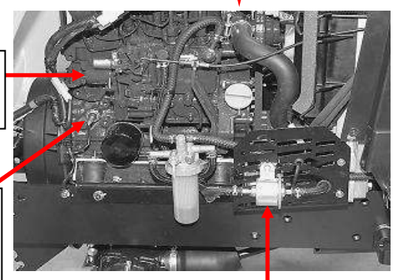





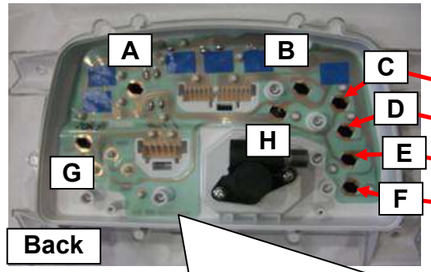

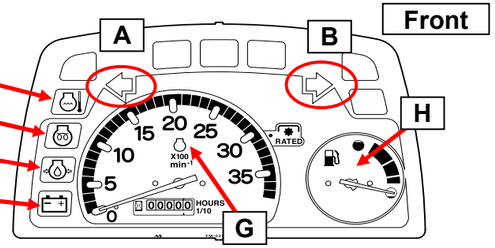



A&B. Turn Signal / Hazard Light
C. Engine Coolant Warning Light
D. Preheater Pilot Light
E. Engine Oil Pressure Warning Light
F. Alternator / Battery Charging Light



G&H. Meter Light

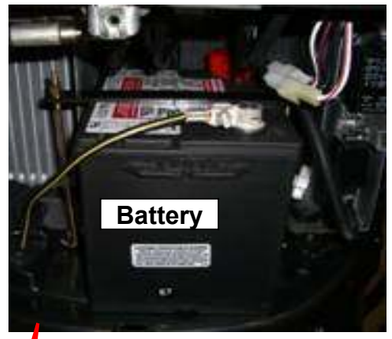

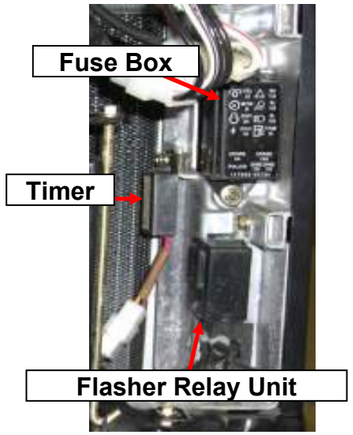



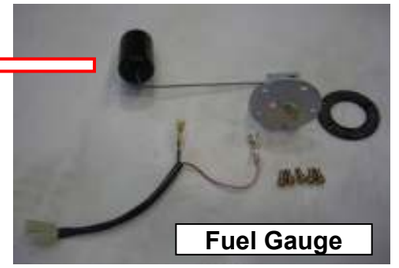

Tail Light

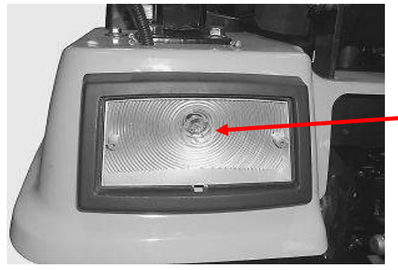





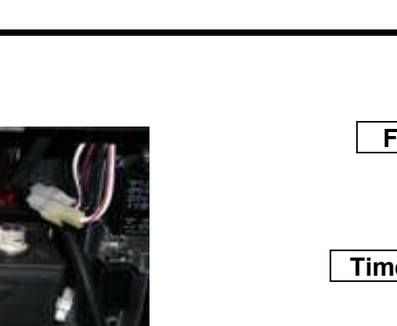

Brake Pedal Switch
(Color: Gray)

Reverse Switch

HST Neutral Switch
(Color: Black)

Coupler for Work Light



4 System Component

Alternator
Alternator / Battery Charging Light
Battery
Brake Pedal Switch (Color: Gray)
Combination Switch
DC Outlet
Engine Coolant Temperature Switch
Engine Coolant Warning Light
Engine Oil Pressure Switch
Engine Oil Pressure Warning Light
Flasher Relay Unit
Fuel Feed Pump
Fuel Gauge
Fuel Gauge Sender
Fuel Relay
Fuel Shut Off Solenoid
Fuse Box
Glow Plug
Hazzard Lights Button Switch
Headlight L
Headlight R
HST Neutral Switch (Color: Black)
Meter Light
PTO Solenoid
PTO Switch
PTO Relay
Preheat Pilot Light
Relay (Headlight
Relay (R/O
Reverse Overide Switch
Reverse Switch
Safety Relay (HST
Safety Relay (Seat
Seat Switch
Side Light L
Side Light R
Slow Blow Fuse
Slow Blow Fuse (Alternator)
Start Relay
Starter
Starter Key Switch
Tail Light L
Tail Light R
Timer
Turn Signal / Hazzard Light L
Turn Signal / Hazzard Light R

5 Circuit Diagnosis

5-1 Cranking Circuit Diagnosis

Function:

Engages the starter by supplying voltage to the starter solenoid.

The condition that engine starts (1 and 2 and 3)

1 PTO switch is OFF.
2 Drive pedal is not stepped (HST neutral switch is ON; contact point of this switch is normal open).
3 Parking brake is engaged or the brake pedal is stepped (Brake pedal switch is OFF; contact point of this switch is normal close).

When this circuit works:

PTO Switch	Off
HST Neutral Switch (Color: Black)	On (Drive Pedal is not stepped)
Brake Pedal Switch (Color: Gray)	Off (Parking Brake is locked)
Starter Key Switch	Start

Test

1 Starter Key Switch

When the test is done:

Starter Key Switch	On (Engine Off)
Parking Brake	Locked
HST Neutral Switch (Color: Black)	On (Drive Pedal is not stepped)
Brake Pedal Switch (Color: Gray)	Off (Parking Brake is locked)

Good Result: Battery voltage
If Result is NOT Good: Check B01 (WR) wire and connections. If O.K., check Slow Blow Fuse and Battery and replace if necessary.

2 PTO 5 A Fuse

When the test is done: same as above

Good Result: Battery voltage
If Result is NOT Good: Check B02 (WG) wire and connections. If O.K., check Starter Key Switch and replace if necessary.

3 PTO Switch

When the test is done: same as above

Good Result: Battery voltage
If Result is NOT Good: Check B15 (LW) wire and connections. If O.K., check PTO 5 A Fuse and replace if necessary.

4 HST Neutral Switch (Color: Black)

When the test is done:

Starter Key Switch	On (Engine Off)
Parking Brake	Locked
HST Neutral Switch (Color: Black)	On (Drive Pedal is not stepped)
Brake Pedal Switch (Color: Gray)	Off (Parking Brake is locked)

Good Result: Battery voltage
If Result is NOT Good: Check B23 (B) wire and connections. If O.K., check PTO Switch and replace if necessary.

5 Safety Relay (HST

When the test is done: same as above

Good Result: Continuity
If Result is NOT Good: Check B21 (YR) and B30B (BY) and G20J (BW) wires and connections. If O.K., check HST Neutral Switch (Color: Black) and replace if necessary.

6 Brake Pedal Switch (Color: Gray)

When the test is done: same as above

Good Result: Battery voltage
If Result is NOT Good: Check B27 (YL) wire and connections. If O.K., check Safety Relay (HST and replace if necessary.

7 Start Relay

When the test is done: same as above

Good Result: Continuity
If Result is NOT Good: Check B28 (RL) and B30A (BY) and G20J (BW) wires and connections. If O.K., check Brake Pedal Switch (Color: Gray) and replace if necessary.

8 Start Relay 25 A Fuse

When the test is done:

Fuel Shut Off Solenoid Connector	Disconnected
Starter Key Switch	Start
Parking Brake	Locked
PTO Switch	Off
HST Neutral Switch (Color: Black)	On (Drive Pedal is not stepped)
Brake Pedal Switch (Color: Gray)	Off (Parking Brake is locked)

Good Result: Battery voltage
If Result is NOT Good: Check S03 (YR) wire and connections. If O.K., check Stater Key Switch and replace if necessary.

9 Starter Relay

When the test is done: same as above

Good Result: Battery voltage
If Result is NOT Good: Check S02 (YB) wire and connections. If no voltage at S02 (YB), check Start Relay 25 A Fuse and replace if necessary. If present at S02 (YB) and B28 (RL) but not at So1 (W), replace Start Relay.

10 Starter Solenoid

When the test is done: same as above

Good Result: Battery voltage
If Result is NOT Good: Check S01 (W) wire and connections. If voltage is present at the solenoid S01 (W) but starter does not activate, check Battery condition and positive battery cable and connections.

Location	Parts name	Parts catalogue name Parts catalogue number	Operation and remarks
Engine right side	Starter	STARTER CY-119626-77020	Crank the engine when the Starter Key Switch is sent to the START position, PTO Switch is "OFF", Drive pedal is the neutral position, and Parking brake is "ON".
Engine right side	Slow Blow Fuse	BLOW, SLOW FUSE 60A CY-1A6240-51630	Protect wiring & electric equipment related to engine start.
Engine right side	Start Relay	RELAY, STARTER CY-198220-52180	It is activated when PTO Switch is "OFF", Drive pedal is the neutral position, and Parking brake is "ON". It gives requistes for application of 12V to the terminal S of Starter.
Front column	Starter Key Switch	SWITCH ASSY, STARTER CY-198226-52100	Used for ON/OFF of Battery power to the circuits.
Under front column	Battery	BATTERY, 26R, ASSY CY-1A8160-51500	Supplies power to the circuits.
Under front column	Fuse, PTO 5A	FUSE, 5A CY-198535-52110	Protect wiring & electric equipment related to PTO
Under front column	Fuse, START RELAY 25A	FUSE, 25A CY-1A7450-52180	Fuse for Start Relay.
Under step	Brake Pedal Switch	SWITCH NC, PEDAL CY-1A7880-52210	Detects whether Parking brake is ON or not. This is normal close type. When Parking brake is ON, this switch is OFF, that is, this switch allows currency to go through.
Under step	HST Neutral Switch	SWITCH, SEAT, DELTA,AS CY-1A8160-52310	Detect whether Drive pedal stepped forward or not. This is normal open type. When Drive pedal is stepped forward, this switch is ON.
Left side fender	PTO Switch	PTO, SWITCH CY-172531-17300	Detect whether switch ON (Pull up) on not.
Inside dashboard cover	Safety Relay(HST	RELAY, ACM 13211M01 CY-1K1140-82500	When activated, this supplies power to Start Relay.
Inside dashboard cover	Diode 3A (Relay2	DIODE, 3.0AX2 CY-1A8160-51130	Protect Start Relay and Safety Relay (HST from the reverse battery

Cranking Circuit Diagram

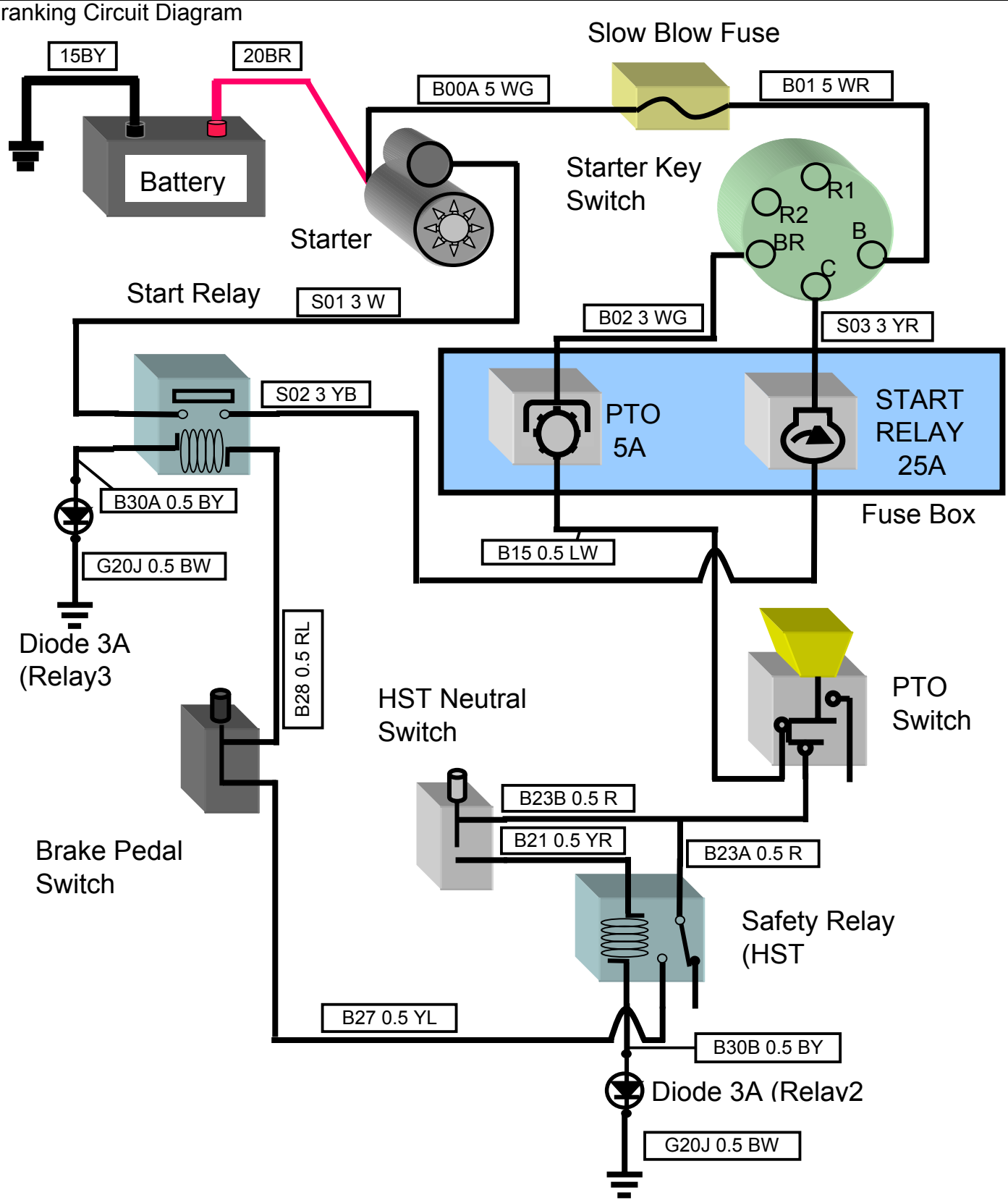

Items to Check on the Electrical Components

Starter

STARTER: CY-119626-77020

Electrical continuity test for starter alone

Range	Measurement location		Result
	Tester electrode +	Tester electrode -	
Conductivity	Starter body	S-terminal	Conductive

Measurement of voltage at harness for main body

Range	Measurement location		Status	Result
	Tester electrode +	Tester electrode -		
Conductivity	B-terminal	Chassis ground		Approx. 12V
	S-terminal	Chassis ground	When Engine is operating	

[REFERENCE]
The direct connection test (When checked alone)

Positive terminal of battery	Battery terminal	Result
Starter body	Connect to S-terminal	The pinion comes out.
	Connect to B-terminal	Nothing occurs.
	Connect to B-and S-terminal	The pinion comes out and the motor rotates.

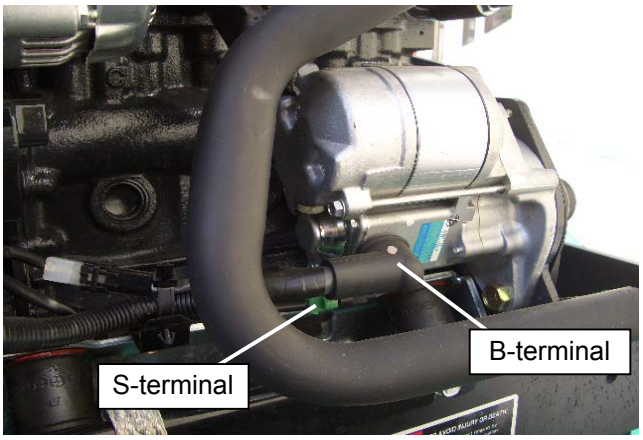

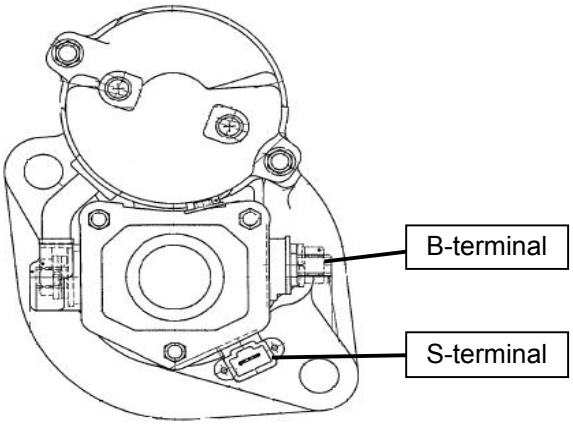

Start Relay

RELAY, STARTER: CY-198220-52180

When checked alone

Range	Measurement location			Result
	Tester electrode +	Tester electrode -		
Resistance	(2)	(4)		Approx. 57ohms (actually measured)
Conductivity	(1)	(3)		Not conductive

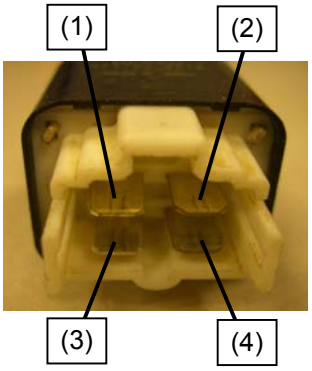



Starter Key Switch

SWITCH, ASSY, STARTER: CY-198226-52100



Use a tester to check electrical continuity in accordance with the following connection table.

Connections of switch terminals

	B	BR	R1	R2	C
Preheat	○		○		
OFF					
ON	○	○			
Start	○	○		○	○

When checked alone

Range	Measurement location		Starter Key Switch Status	Result
	Tester electrode +	Tester electrode -		
Conductivity	(2)	(1)	Preheat	Conductive
	(3)	(1)	ON	
	(3)	(1)	Start	
	(4)	(1)	Start	
	(5)	(1)	Start	

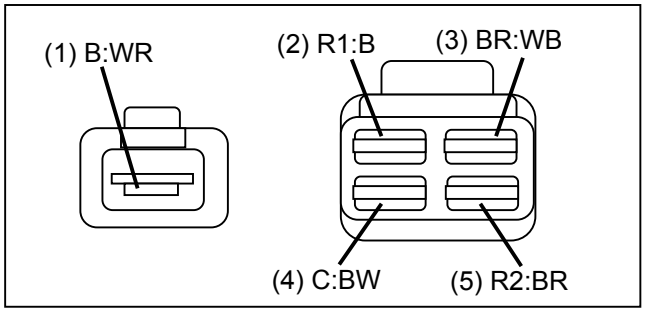

Brake Pedal Switch

SWITCH NC, PEDAL: CY-1A7880-52210

Range	Measurement location		Switch Status	Result
	Tester electrode +	Tester electrode -		
Conductivity	(1)	(2)	As it is	Conductive
	(1)	(2)	Pushed down	Not Conductive

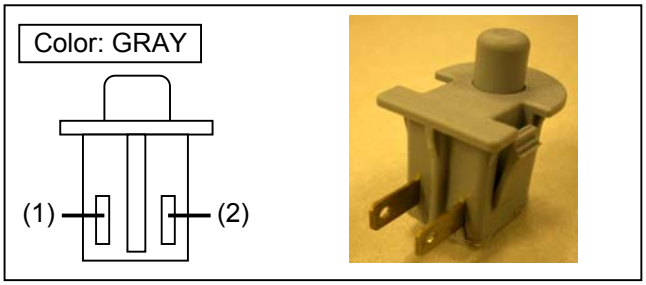

HST Neutral Switch

SWITCH, SEAT, DELTA, AS: CY-1A8160-52310

Range	Measurement location		Switch Status	Result
	Tester electrode +	Tester electrode -		
Conductivity	(1)	(2)	Pushed down	Conductive
	(1)	(2)	As it is	Not Conductive

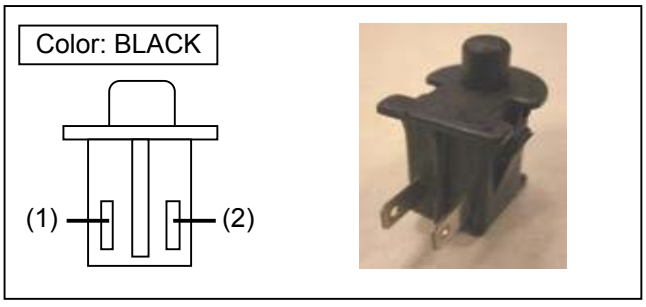

PTO Switch

PTO, SWITCH: CY-172531-17300

Range	Measurement location		Switch Status	Result
	Tester electrode +	Tester electrode -		
Conductivity	(1)	(3)	OFF	Conductive
	(2)	(3)		Not Conductive
	(2)	(3)	ON (Switch is pulled up)	Conductive
	(1)	(3)		Not Conductive



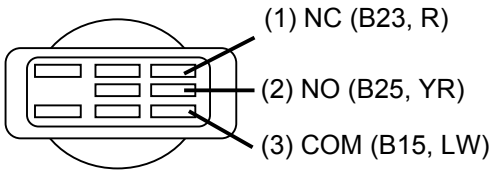

5-2 Charging Circuit Diagnosis

Function:

To keep the battery voltage between 12.4 and 13.2 volts
Alternator / Battery charging light remains lit when the starter key switch is in ON position and the engine is OFF.
If this light illuminates while the engine is running, the power generated by the alternator is too low.

When this circuit works:

Starter Key Switch	On position with Engine running

Test

1 Voltage I/C Alternator E11(WR)

When the test is done:

Parking Brake	Locked
Starter Key Switch	OFF (Engine Off)

Good Result: Battery Voltage
If Result is NOT Good: Check Slow Blow Fuse (Alternator) E11 wire and connections. If O.K., check the battery and positive battery cable and replace if necessary.

2 Voltage I/C Alternator B12A (WB)

When the test is done:

Parking Brake	Locked
Starter Key Switch	On position (Engine Off)

Good Result: Battery Voltage
If Result is NOT Good: Check METER 5 A Fuse (BOX). Check B02 (WG) and B12 (WB) wire and connections. If O.K., check Starter Key Switch and replace if necessary.

3 Alternator / Battery Charging Light on Instrument panel

When the test is done: same as above

Good Result: Lighting
If Result is NOT Good: Check P03 (YG) wire and B12C (WB) wire and connections. If O.K., replace bulb.

4 Voltage I/C Alternator E11 (WR)

When the test is done:

Parking Brake	Locked
Engine	Running at full throttle

Good Result: 14.0 - 14.4 volts DC
If Result is NOT Good: See "Regulated Amperage & Voltage Test".

Location	Parts name	Parts catalogue name Parts catalogue number	Operation and remarks
Engine right side	Slow Blow Fuse	BLOW, SLOW FUSE 60A CY-1A6240-51630	Protect wiring & electric equipment related to battery charge
Engine right side	Slow Blow Fuse (Alternator	BLOW, SLOW FUSE 60A CY-1A6240-51630	
Engine right side	Alternator	GENERATOR CY-119620-77201	Generate electric power while the engine runs, and accumulates power in the battery
Front column	Starter Key Switch	SWITCH ASSY, STARTER CY-198226-52100	Used for ON/OFF of Battery power to the circuits.
Front column	Alternator / Battery Charging Light	BULB CY-1A7510-56110	Remain lit when Starter Key Switch is in the ON position and the engine is OFF. If this light illuminates while the engine is running, the power generated by Alternator is too low.
Under front column	Battery	BATTERY, 26R, ASSY CY-1A8160-51500	Supplies power to the circuits.
Under front column	Fuse, METER 5A	FUSE, 5A CY-198535-52110	Protect Alternator / Battery Charging Light circuit

Charging Circuit Diagram

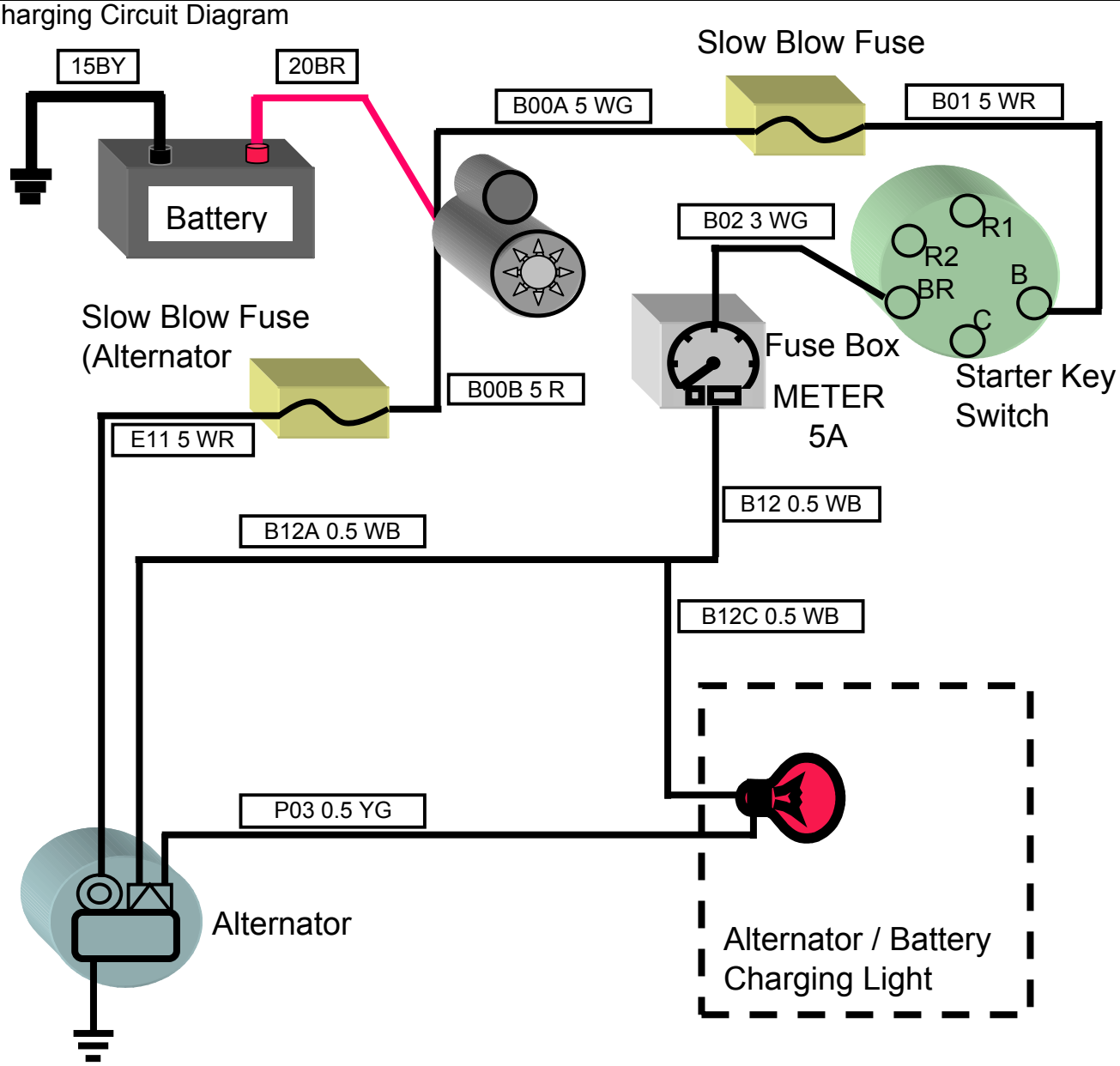

Items to Check on the Electrical Components

Alternator

GENERATOR: CY-119620-77201

Check of Alternator coupler
Measure without removing B-terminal

Range	Measurement location		Status	Result
	Tester electrode +	Tester electrode -		
DCV	B-teminal	Chassis ground	Starter switch [OFF]	Approx. 12V

Measure with IG and L-terminal coupler removed

Range	Measurement location		Status	Result
	Tester electrode +	Tester electrode -		
DCV	(1)	Chassis ground	Starter switch [ON]	Approx. 12V
	(2)	Chassis ground	Starter switch [ON]	

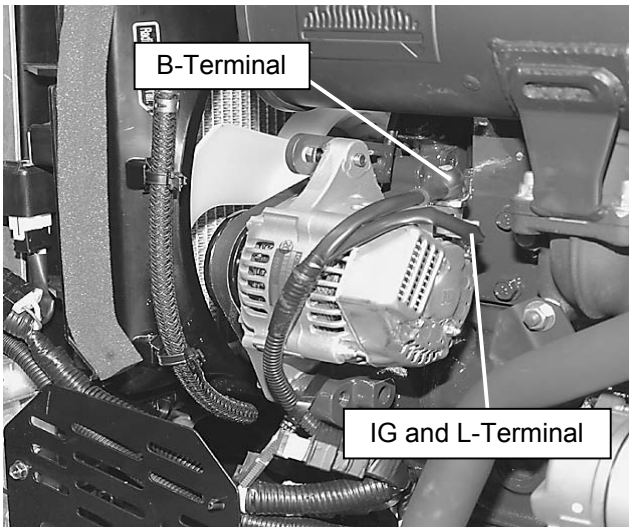

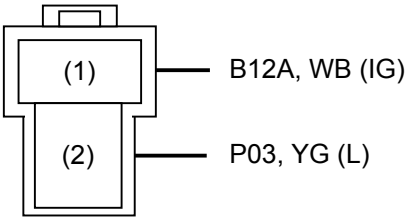

Alternator has a built-in IC regulator. The alternating current produced by Alternator is rectified into direct current.

1.	Do not reverse polarity between the IG and L-terminals.
2.	Do not shotcircuit the IG and L-terminals.
3.	Do not remove Battery terminals and B-terminal when Alternator is running.

Starter Key Switch

Please see "Starter Key Switch" in Cranking circuit.

5-3 Preheating Circuit Diagnosis

Function:

It supplies electricity to the glow plugs to warm the combustion chambers.
When Starter Key Switch is turned to the Start position, Glow Plugs are energized and heated the combution chamber.
When Starter Key Switch is in the Preheat position, current is provided to Glow Plugs through Starter Key Switch R1. Starter Key Switch is also held in the Start position, current is provided to them through Starter Key Switch R2.
Preheater Pilot Light illuminates when Glow Plugs are energized.

When this circuit works:

Starter Key Switch	Start or Preheat

Test

1 Starter Key Switch Terminal B

When the test is done:

Starter Key Switch	Preheat

Good Result: Battery voltage
If Result is NOT Good: Check B01 (WR) wire and connections. If O.K., check Slow Blow Fuse and Battery and replace if necessary.

2 Starter Key Switch Terminal R1 and R2

When the test is done: same as above

Good Result: Battery voltage
If Result is NOT Good: Replace Starter Key Switch

3 Glow Plug Input Terminal

When the test is done: same as above

Good Result: Battery voltage
If Result is NOT Good: Check S04B (BR) wire and connections. If O.K., replace Glow plug wiring harness if necessary.

4 Head of Glow Plug and Ground (three places)

When the test is done:

Starter Key Switch	Off
Glow Plug	Take off terminal from three glow plugs

Good Result: Contact
If Result is NOT Good: Replace Glow Plug

5 Starter Key Switch Terminal R1 and R2

When the test is done:

Fuel Shut Off Solenoid Connector	Disconnected
Starter Key Switch	Start
Parking Brake	Locked
PTO Switch	Off
HST Neutral Switch (Clolor: Black)	On (Drive Pedal is not stepped)
Brake Pedal Switch (Color: Gray)	Off (Parking Brake is locked)

Good Result: Battery voltage
If Result is NOT Good: Replace Starter Key Switch

Location	Parts name	Parts catalogue name Parts catalogue number	Operation and remarks
Engine right side	Slow Blow Fuse	BLOW, SLOW FUSE 60A CY-1A6240-51630	Protect wiring & electric equipment related to preheating
Engine	Glow Plugs	PLUG, GLOW CY-119717-77800	Warm the combution chamber to improve the startability of the engine
Front column	Starter Key Switch	SWITCH ASSY, STARTER CY-198226-52100	Used for ON/OFF of Battery power to the circuits.
Front column	Preheater Pilot Light	BULB CY-1A7510-56110	Illuminate when Starter Key Switch is turned to the preheating position.
Under front column	Battery	BATTERY, 26R, ASSY CY-1A8160-51500	Supplies power to the circuits.

Preheating Circuit Diagram

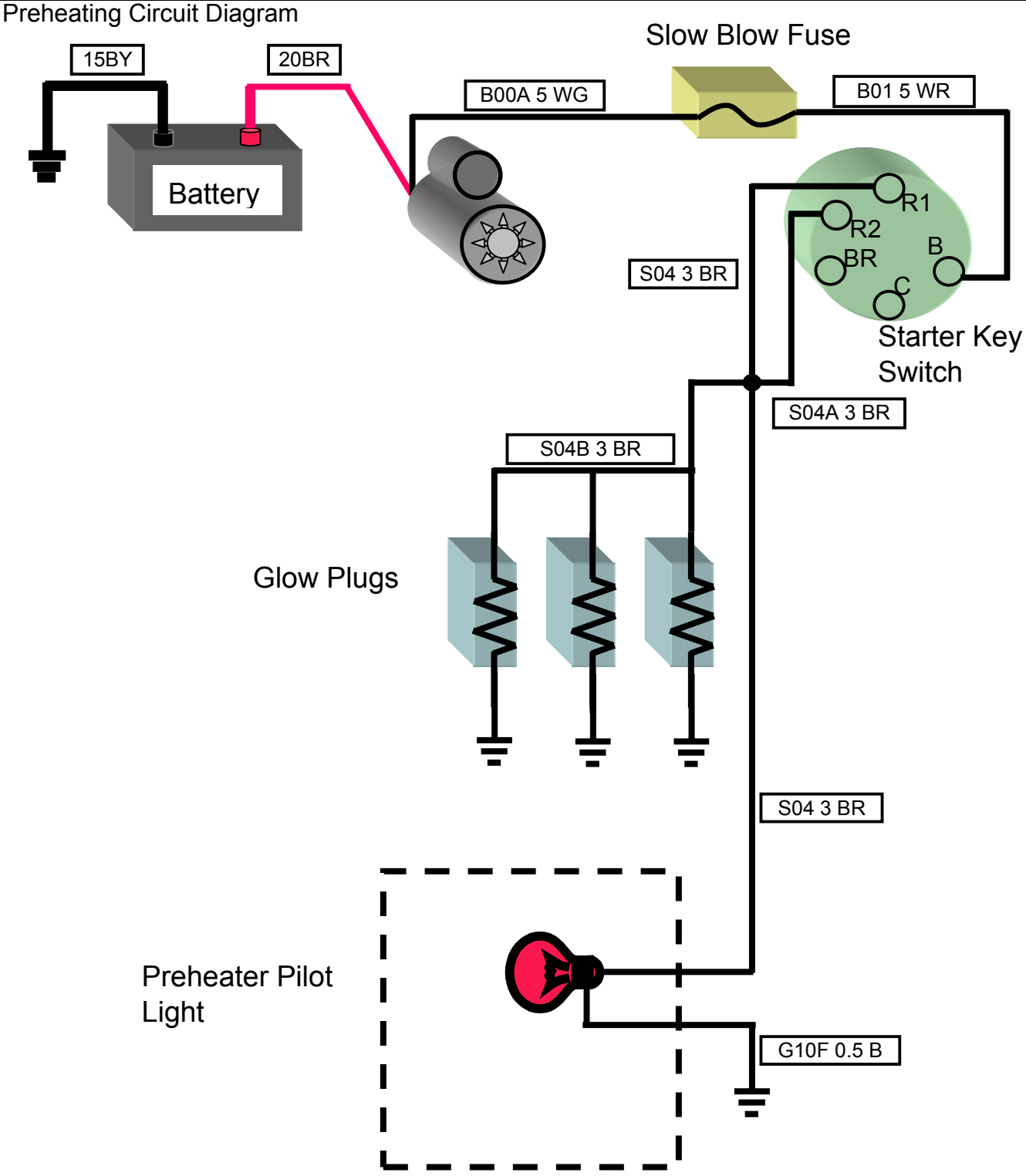

5-4 Fuel Supply and Stop Circuit Diagnosis

Function:

To begin or stop fuel supply to Engine

When the voltage is supplied to the Fuel Shut Off Solenoid, fuel is supplied to Fuel Injection Pump. There are two coils, the pull coil is to overcome the spring force of the solenoid and retract the plunger in Fuel Shut Off Solenoid in the retracted position. The hold coil maintains the plunger in Fuel Shut Off Solenoid in the retracted position.
When Starter Key Switch is in Start position, high electric current reaches Fuel Shut Off Solenoid pull coil from Fuel Relay contacts energizing the pull coil creating a magnetic field that retracts the plunger in Fuel Shut Off Solenoid.
With the plunger in the retracted position, fuel is supplied to the Fuel Injection Pump and Engine is started.
After 1.0 second or when Starter Key Switch is released and returns to On position, Fuel Relay drops voltage to the pull coil. The hold coil is then energized creating a second magnetic field. Fuel Shut Off plunger remains in the retracted position due to the magnetic field.

When this circuit works:

The condition that engine stops during engine running

PTO Switch	On
Seat Switch	Off (operator leaves the seat for more than 1 second)

OR

PTO Switch	Off
HST Neutral Switch (Color: Black)	Off (Drive Pedal is stepped, Forward or Reverse)
Seat Switch	Off (Operator leaves the seat for more than 1 second)

The condition that engine DOES NOT stop during engine running (1 or 2 or 3)

Seat Switch	On (Operator on seat)

OR

PTO Switch	Off
HST Neutral Switch (Color: Black)	On (Drive Pedal is not stepped)

Test (PULL)
1 Fuel Relay

When the test is done:

Starter Key Switch	On (Engine Off)
Seat Switch	On (or Operator on seat)
HST Neutral Switch (Color: Black)	On (Drive Pedal is not stepped)
Brake Pedal Switch (Color: Gray)	Off (Parking Brake is locked)
PTO Switch	Off

Good Result: Battery voltage
If Result is NOT Good: Check B01B (WR) wire and connections. If O.K., check Slow Blow Fuse and Battery and replace if necessary.

2 Safety Relay (Seat

When the test is done: same as above

Good Result: Battery voltage
If Result is NOT Good: Check B12 (WB) wire and connections. If O.K., check METER 5 A Fuse (BOX) and replace if necessary.

3 Safety Relay (HST

When the test is done: same as above

Good Result: Battery voltage
If Result is NOT Good: Check B23A (R) wire and connections. If O.K., check PTO Switch and replace if necessary.

4 Timer (1s)

When the test is done:

Starter Key Switch	On (Engine Off)
Seat Switch	Off (or Operator off seat)
HST Neutral Switch (Color: Black)	On (Drive Pedal is not stepped)
Brake Pedal Switch (Color: Gray)	Off (Parking Brake is locked)
PTO Switch	Off

Good Result: Battery voltage
If Result is NOT Good: Check B24 (Br) wire and connections. If O.K., check Safety Relay (Seat and replace if necessary.

5 Diode 3 A (Relay 3

When the test is done:

Seat Switch	Off (or Operator off seat)
HST Neutral Switch (Color: Black)	On (Drive Pedal is not stepped)
Brake Pedal Switch (Color: Gray)	Off (Parking Brake is locked)
PTO Switch	Off
Starter Solenid Lead (Terminal S)	Disconnected
Starter Key Switch	Start (Engine not running)

Good Result: Battery voltage
If Result is NOT Good: Check S01A (W) wire and connections. If O.K., check Start Relay and replace if necessary.

6 Timer

When the test is done: same as above

Good Result: Battery voltage
If Result is NOT Good: Check B24 (BR) wire and connections. If O.K., replace Diode 3 A (Relay 3.

7 Fuel Shut Off Solenoid

When the test is done: same as above

Good Result: Battery voltage for a second at pull coil lead
If Result is NOT Good: Check E12 (RL) wire and connections. If O.K., replace Fuel Relay.

Test (Hold)

1 PTO Switch

When the test is done:

Seat Switch	On (or Operator on seat)
HST Neutral Switch (Color: Black)	On (Drive Pedal is not stepped)
Brake Pedal Switch (Color: Gray)	Off (Parking Brake is locked)
PTO Switch	Off
Starter Key Switch	On (Engine off)

Good Result: Battery voltage
If Result is NOT Good: Check B15 (LW) wire and connections. If O.K., check PTO 5 A Fuse (BOX) and replace if necessary.

2 Safety Relay (HST

When the test is done: same as above

Good Result: Battery voltage
If Result is NOT Good: Check B23A (R) wire and connections. If O.K., check PTO Switch and replace if necessary.

3 Diode 3A (Seat

When the test is done: same as above

Good Result: Battery voltage
If Result is NOT Good: Check B22 (Y) wire and connections. If O.K., check Safety Relay (HST and replace if necessary.

4 Seat Switch

When the test is done: same as above

Good Result: Battery voltage
If Result is NOT Good: Check B34 (Br) wire and connections. If O.K., check Diode 3A (Seat and replace if necessary.

5 Safety Relay (Seat

When the test is done: same as above

Good Result: Battery voltage
If Result is NOT Good: Check B29 (LR) wire and connections. If O.K., check Seat Switch and replace if necessary.

6 Fuel Shut Off Solenoid

When the test is done: same as above

Good Result: Battery voltage
If Result is NOT Good: Check B26 (WL) wire and connections. If O.K., check Safety Relay (Seat and replace if necessary.

7 PTO Switch

When the test is done:

Seat Switch	Off (or Operator off seat)
HST Neutral Switch (Color: Black)	On (Drive Pedal is not stepped)
Brake Pedal Switch (Color: Gray)	Off (Parking Brake is locked)
PTO Switch	Off
Starter Key Switch	On (Engine off)

Good Result: Battery voltage
If Result is NOT Good: Check B15 (LW) wire and connections. If O.K., check PTO 5A Fuse and replace if necessary.

8 HST Neutral Switch

When the test is done: same as above

Good Result: Battery voltage
If Result is NOT Good: Check B23B (R) wire and connections. If O.K., check PTO Switch and replace if necessary.

9 Safety Relay (HST

When the test is done: same as above

Good Result: Battery voltage
If Result is NOT Good: Check B21 (YR) wire and connections. If O.K., check HST Neutral Switch and replace if necessary.

10 Diode 3A (Relay2

When the test is done: same as above

Good Result: Battery voltage
If Result is NOT Good: Check B30 (B) and G20J (BW) wires and connections. If O.K., check Safety Relay (HST and replace if necessary.

Location	Parts name	Parts catalogue name Parts catalogue number	Operation and remarks
Engine right side	Starter	STARTER CY-119626-77020	Crank the engine when the Starter Key Switch is sent to the START position, PTO Switch is "OFF", Drive pedal is the neutral position, and Parking brake is "ON".
Engine right side	Slow Blow Fuse	BLOW, SLOW FUSE 60A CY-1A6240-51630	Protect wiring & electric equipment related to fuel supply
Engine right side	Start Relay	RELAY, STARTER CY-198220-52180	It is activated when PTO Switch is "OFF", Drive pedal is the neutral position, and Parking brake is "ON". It gives requistes for application of 12V to the terminal S of Starter.
Engine right side	Diode 3A (Relay3	DIODE, 3.0A CY-1A7500-51130	Protect Start Relay and Starter from the reverse battery
Engine left side	Fuel Shut-Off Solenoid	SOLENOID, STOP CY-119653-77950	Cut off the fuel to the fuel injection pump to stop the engine when Starter Key Switch is turned off
Engine left side	Diode 3A (Fuel	DIODE, 3.0A CY-1A7500-51130	Protect Fuel Shut-Off Solenoid from the reverse battery
Front column	Starter Key Switch	SWITCH ASSY, STARTER CY-198226-52100	Used for ON/OFF of Battery power to the circuits.
Under front column	Battery	BATTERY, 26R, ASSY CY-1A8160-51500	Supplies power to the circuits.
Under front column	Fuse, PTO 5A	FUSE, 5A CY-198535-52110	Protect wiring & electric equipment related to PTO
Under front column	Fuse, METER 5A	FUSE, 5A CY-198535-52110	Protect wiring & electric equipment related to Fuel Shut-Off Solenoid
Under front column	Fuse, START RELAY 25A	FUSE, 25A CY-1A7450-52180	Fuse for Start Relay.
Under front column	Timer	TIMER, SECTION 1 CY-129211-77920	It is activated when PTO Switch is "OFF", Drive pedal is the neutral position, and Parking brake is "ON". It gives requistes for application of 12V to Fuel Shut-Off Solenoid.
Inside dashboard cover	Fuel Relay	RELAY, ACM 13211M01 CY-1K1140-82500	When activated, this supplies power to Fuel Shut-Off Solenoid (PULL).
Inside dashboard cover	Safety Relay (Seat	RELAY, ACM 13211M01 CY-1K1140-82500	When activated, this supplies power to Fuel Shut-Off Solenoid (HOLD).
Inside dashboard cover	Safety Relay (HST	RELAY, ACM 13211M01 CY-1K1140-82500	When activated, this supplies power to Start Relay and Safety Relay (Seat.
Inside dashboard cover	Diode 3A (Relay2	DIODE, 3.0AX2 CY-1A8160-51130	Protect Start Relay and Safety Relay (HST from the reverse battery
Left side Fender	PTO Switch	PTO, SWITCH CY-172531-17300	Detect whether switch ON (Pull up) on not.
Under step	Brake Pedal Switch	SWITCH NC, PEDAL CY-1A7880-52210	Detect whether Parking brake is ON or not. This is normal close type. When Parking brake is ON, this switch is OFF, that is, this switch allows currency to go through.

Under step	HST Neutral Switch	SWITCH, SEAT, DELTA,AS CY-1A8160-52310	Detect whether Drive pedal stepped forward or not. This is normal open type. When Drive pedal is stepped forward, this switch is ON.
Under step	Reverse Switch	SWITCH NC, PEDAL CY-1A7880-52210	Detect whether Drive pedal is stepped backward or not. This is normal close type. When Drive pedal stepped backward, this switch is ON, that is, this switch DOES NOT allow currency to go through.
Under seat	Seat Switch	SWITCH, SEAT, DELTA,AS CY-1A8160-52310	Detect whether the operator sit on the seat or not. This is normal open type. When he or she sits on the seat, this switch is ON.
Above transmission housing	Diode 3A (Seat	DIODE, 3.0A CY-1A7500-51130	Protect Safety Relay (HST from the reverse battery
Above transmission housing	Diode 3A (PTO	DIODE, 3.0AX2 CY-1A8160-51130	Protect PTO Relay from the reverse battery
Above transmission housing	PTO Relay	RELAY, ACM 13211M01 CY-1K1140-82500	Supplies power to PTO solenoid.
Above transmission housing	PTO Solenoid	SOLENOID ASSY CY-192159-27700	While this is receiving power, its bushing pin pushes down the spool to activate PTO.

Fuel Supply and Stop Circuit Diagram

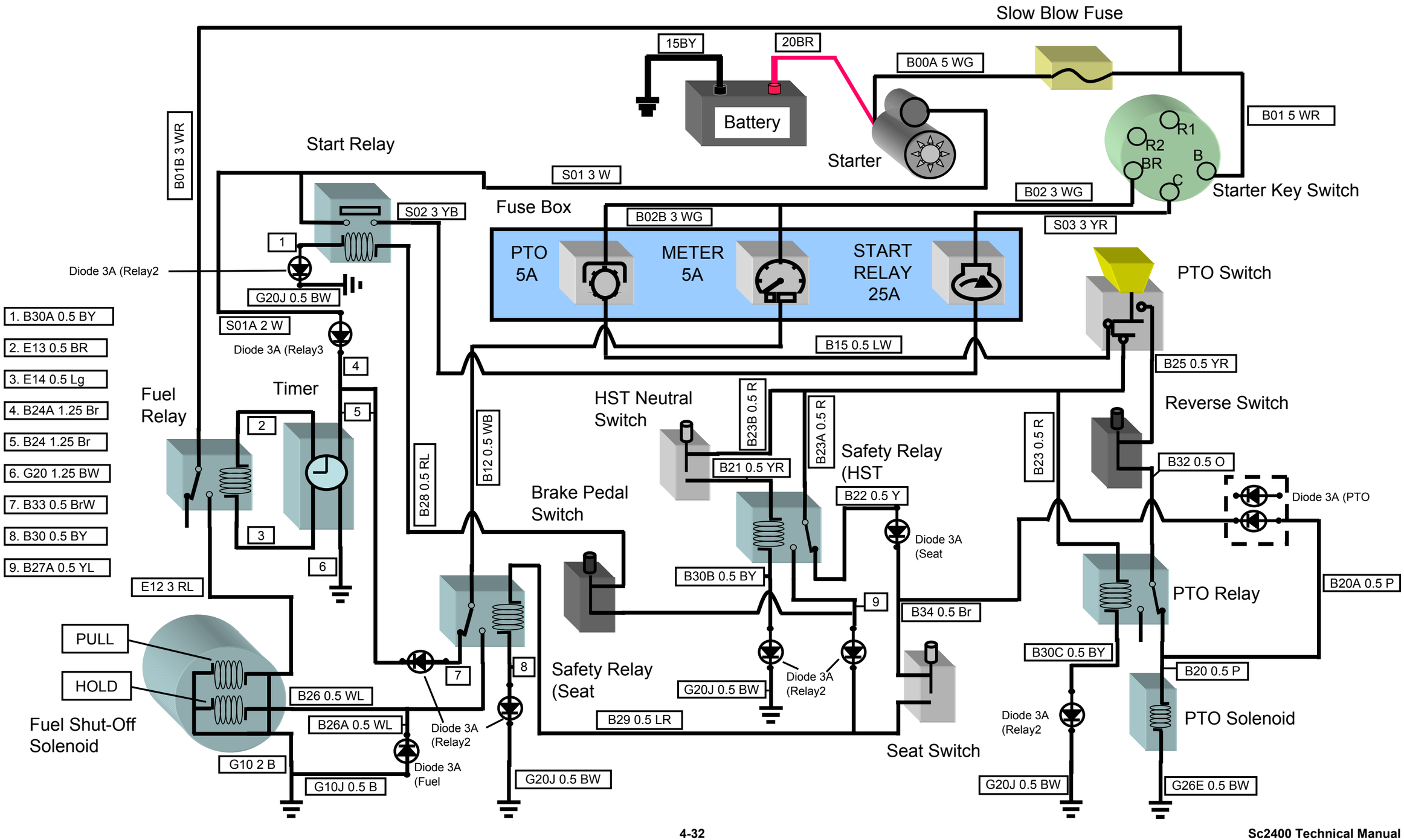

Items to Check on the Electrical Components

Start Relay

Please see "Start Relay" in Cranking Circuit.

Starter

Please see "Starter" in Cranking circuit.

Fuel Shut-Off Solenoid

SOLENOID, STOP: CY-119653-77950

Measurement on an individual component basis
(A-end coupler)

Range	Measurement location		State	Result
	Tester electrode +	Tester electrode -		
Resistance	(2)	(1)		Approx. 12.4 ohms
	(3)	(1)		Approx. 0.33 ohms

Check of the coupler on the main body side
(B-end coupler)

Range	Measurement location		State	Result
	Tester electrode +	Tester electrode -		
Conductivity	(4)	Chasis grounding	Starter switch "OFF"	Conductive
DCV	(5)	Chasis grounding	Starter switch "START"	Approx. 12V
	(6)	Chasis grounding	Starter switch "ON"	Approx. 12V

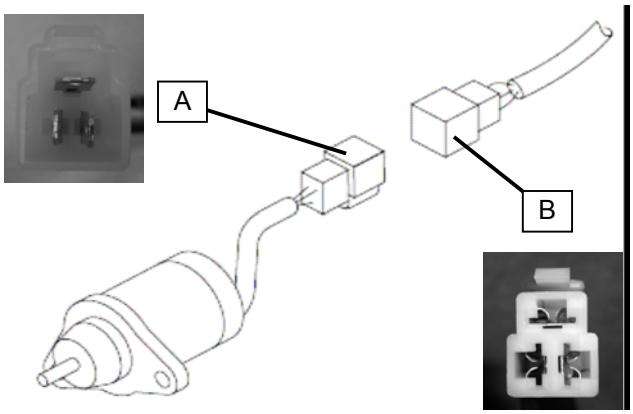

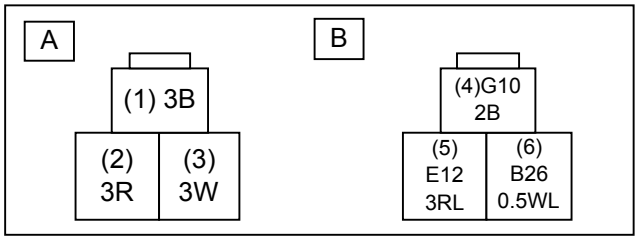

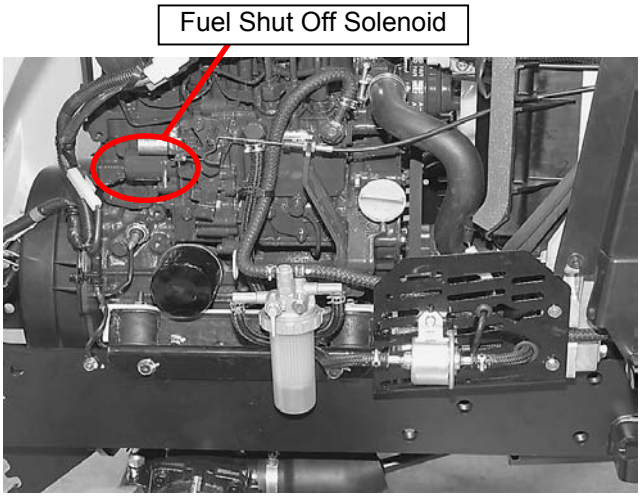

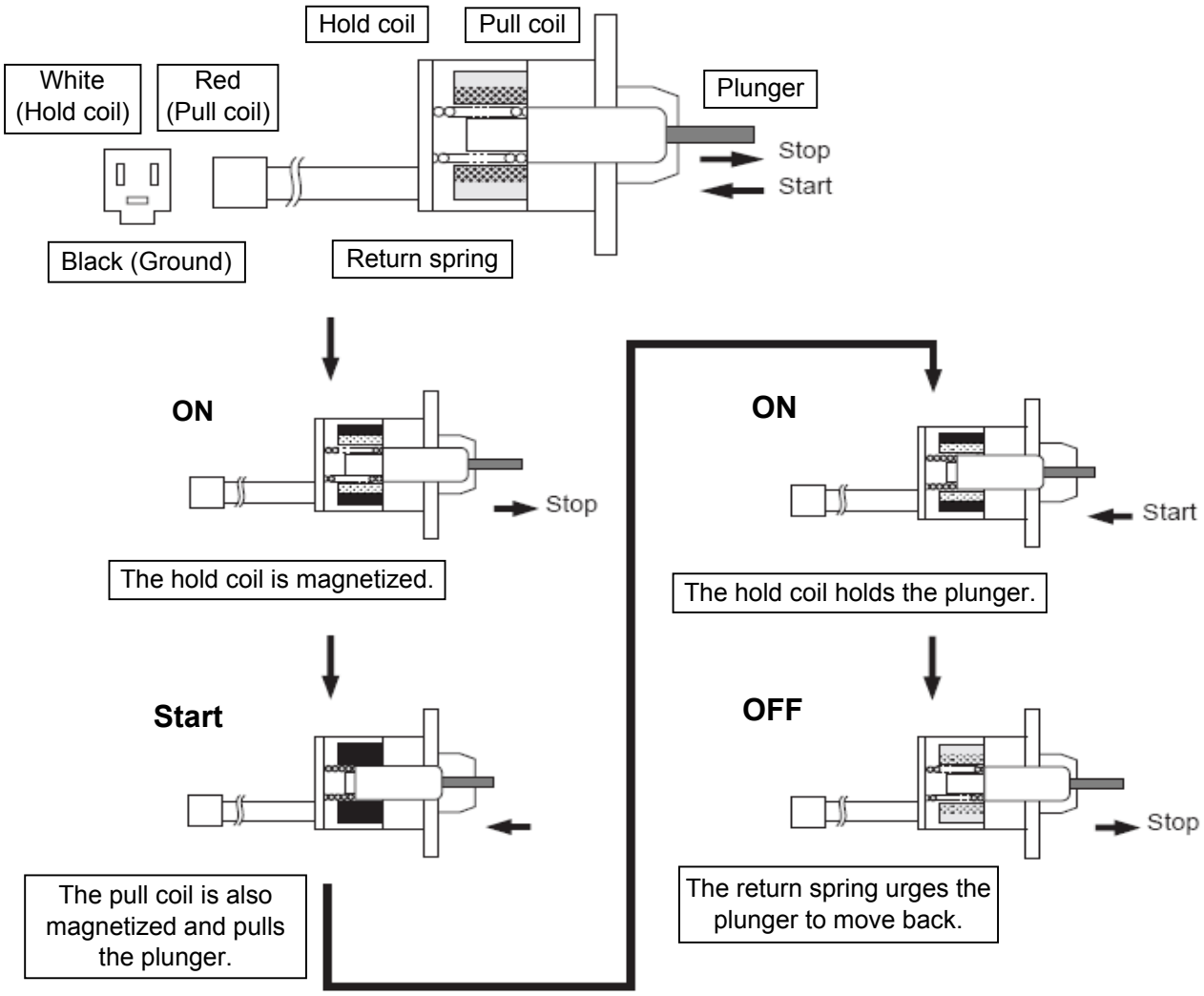

Starter Key Switch

Please see "Starter Key Switch" in Cranking circuit.

Brake Pedal Switch
Reverse Switch

Please see "Brake Pedal Switch" in Cranking circuit.

PTO Switch

Please see "PTO Switch" in Cranking circuit.

HST Neutral Switch
Seat Switch

Please see "HST Neutral Switch" in Cranking circuit.

Timer

TIMER, SECTION 1: CY-129211-77920

State of Timer unit installed on main body

Range	Measurement location		Status	Result
	Tester electrode +	Tester electrode -		
DCV	(1)	(2)	Turn Starter Key Switch to the "OFF"	No voltage
			Turn Starter Key Switch to the "ON"	Approx.12V (up to 15 seconds)
			Engine starts (Engine Oil Pressure Warning Light goes out)	No voltage

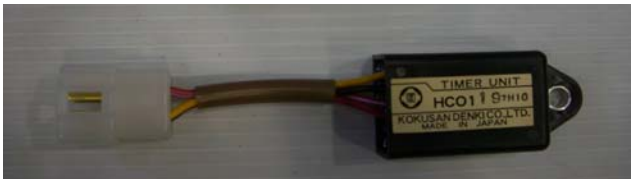

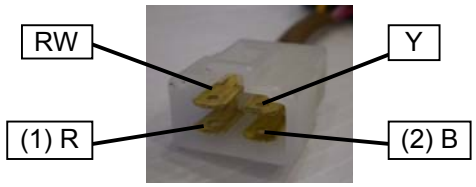

5-5 Instrument Panel Circuit Diagnosis

Function:

Alternator / Battery Charging Light

When the key has been turned to On position, this light illuminates. After the engine starts, it turns off. This means the battery charge has started. If it illuminates while the engine is running, the power generated by the alternator is too low.

Engine Coolant Warning Light

This light illuminates when engine coolant temperature becomes abnormally high. When it illuminates, immediate--ly decrease the load of the tractor. To lower the coolant temperature, run the engine at idle until this light turned off. After it is turned OFF, stop the engine. Allow it to cool off, and only then, check the following points.
(1) Coolant water level in the radiator and reserve tank
(2) Clogging of the radiator fin and radiator screen
(3) Tension of the fan belt

Engine Oil Pressure Warning Light

This light remains lit when the starter key switch is in On position and the engine is Off. If it illuminates during engine rotation, it shows a trouble has come up in lubricant circuit (the engine oil pressure is too low).

Preheater Pilot Light

While turning the key to the PREHEATING position or the START position, the preheater pilot light turns ON. It shows glow plugs are energized. Preheating time should be determined according to outside air tempereture. For detail, refer to the table below

Temperature (ºF (ºC))	Preheating Time (sec.)
Over 32 (0)	2 to 3
32 to 23 (0 to -5)	5
Below 23 (-5)	10

Fuel Gauge Sensor

The fuel level of a fuel tank is measured with a fuel meter sensor. The sensor is a variable resistor. Resistance is set by movement of a mechanical link connecting the resistor with a float in a fuel tank. Resistance of appro--ximate 3-110 ohm establishs a variable voltage difference to the Fuel Gauge in turn changing the reading of the gauge.

When this circuit works:

Starter Key Switch	On (Engine off)

Test

1 B12 (WB), B12A (WB), B12B (WB), B12C (WB) wires

When the test is done:

Starter Key Switch	On (Engine Off)
Seat Switch	On (or Operator on seat)
HST Neutral Switch (Color: Black)	On (Drive Pedal is not stepped)
Brake Pedal Switch (Color: Gray)	Off (Parking Brake is locked)
PTO Switch	Off

Good Result: Battery voltage
If Result is NOT Good: Check wires and connections. If O.K., check Meter 5 A Fuse (BOX) and replace if necessary.

2 Alternator / Battery Charging Light

When the test is done: same as above

Good Result: Battery voltage
If Result is NOT Good: Check P03 (YG) wire and connections. If O.K., check bulb and replace if necessary.

3 Alternator / Battery Charging Light socket on Instrument Panel

When the test is done: same as above

Good Result: Continuity to ground
If Result is NOT Good: Check P03 (YG) wire and connections. If O.K., check Alternator and replace if necessary.

4 Engine Coolant Warning Light

When the test is done: same as above

Good Result: Lighting and Battery voltage
If Result is NOT Good: Check P01 (Y) wire and connections. Test bulb. If O.K., check Engine Coolant Temperature Switch and replace if necessary.

5 Fuel Gauge Sensor

When the test is done: same as above

Good Result: Battery voltage
If Result is NOT Good: Check P04 (YL) wire and connections. If voltage is present, remove the sensor from Engine block and immerse in 230°F±5°F (110°C±3°C) or hotter water to check if contacts close. Replace Sensor if necessary.

6 Fuel Gauge Sensor

When the test is done: same as above

Good Result: Continuity to ground
If Result is NOT Good: Check connection to ground.

7 Engine Oil Pressure Warning Light

When the test is done: same as above

Good Result: Lighting and Battery voltage
If Result is NOT Good: Check P02 (YR) wire and connections. Test bulb. If O.K., check Engine Oil Pressure Switch and replace if necessary.

8 Meter Light L03 (GB)

When the test is done: same as above

Good Result: Lighting and Battery voltage
If Result is NOT Good: Check Headlight 15 A Fuse (BOX). Check B11 (RY), L03 (GB), G10E (B) wires and connections. Test bulbs. If O.K., check Starter Key Switch and replace if necessary.

9 Meter Light G10E (B)

When the test is done: same as above

Good Result: Continuity to ground
If Result is NOT Good: Check G10E (B) wire and connections. If O.K., replace Instrument Panel unit.

10 Preheat Pilot Light

When the test is done:

Seat Switch	On (or Operator on seat)
HST Neutral Switch (Color: Black)	On (Drive Pedal is not stepped)
Brake Pedal Switch (Color: Gray)	Off (Parking Brake is locked)
PTO Switch	Off
Starter Key Switch	Preheat

Good Result: Lighting and Battery voltage
If Result is NOT Good: Check S04 (BR) and G10F (B) wires and connections. Test bulb. If O.K., check Starter Key Switch and replace if necessary.

Location	Parts name	Parts catalogue name Parts catalogue number	Operation and remarks
Engine right side	Starter	STARTER CY-119626-77020	Crank the engine when the Starter Key Switch is sent to the START position, PTO Switch is "OFF", Drive pedal is the neutral position, and Parking brake is "ON".
Engine right side	Slow Blow Fuse	BLOW, SLOW FUSE 60A CY-1A6240-51630	Protect wiring & electric equipment related to Instrument Panel
Engine right side	Slow Blow Fuse (Alternator	BLOW, SLOW FUSE 60A CY-1A6240-51630	Protect wiring & electric equipment related to battery charge
Engine right side	Alternator	GENERATOR CY-119620-77201	Generate electric power while the engine runs, and accumulates power in the battery
Engine left side	Oil Pressure Switch	SWITCH, (0.5KG)L.O. CY-114250-39450	Detect the engine oil pressure
Engine left side	Coolant Temperature Switch	SWITCH, THERMO(110C CY-121250-44901	Detect the engine coolant temperature
Engine	Glow Plugs	PLUG, GLOW CY-119717-77800	Warm the combution chamber to improve the startability of the engine
Front column	Starter Key Switch	SWITCH ASSY, STARTER CY-198226-52100	Used for ON/OFF of Battery power to the circuits.
Front column	Combination Switch	SWITCH, COMBINATION CY-1A7880-52140	For operation of Head Light and Turn Signal Flasher
Front column	Hazard Switch	HAZARD SW CY-1A7335-52120	Cause the button light up and the hazard lights at the rear of tractor to flash
Front column	Preheater Pilot Light	BULB CY-1A7510-56110	Illuminate when Starter Key Switch is turned to the preheating position.
Front column	Alternator / Battery Charging Light	BULB CY-1A7510-56110	Remain lit when Starter Key Switch is in the ON position and the engine is OFF. If this light illuminates while the engine is running, the power generated by Alternator is too low.
Front column	Fuel Gauge	METER ASSY CY-1A7880-56010	Indicate level of fuel in the fuel tank, while Starter Key Switch is in ON position
Front column	Oil Pressure Warning Light	BULB CY-1A7510-56110	Remain lit when Starter Key Switch is in the ON position and the engine is OFF. If this light illuminates while the engine is running, the the engine oil pressure is too low.
Front column	Coolant Warning Light	BULB CY-1A7510-56110	Illuminate when engine coolant temperature becomes abnormally high
Front column	Turn L / R (Instrument Panel)	BULB CY-1A7510-56110	When Turn signal or Hazard is activated, it blinks.
Front column	Meter Light (Instrument Panel)	BULB, 14V-1.4W CY-198448-56150	When Combination Switch is activated, this light illuminates.

Under front column	Battery	BATTERY, 26R, ASSY CY-1A8160-51500	Supplies power to the circuits.
Under front column	Fuse, METER 5A	FUSE, 5A CY-198535-52110	Protect Alternator / Battery Charging Light circuit
Under front column	Fuse, HEAD LAMP 15A	FUSE, 15A CY-198535-52130	Protect wiring & electric equipment related to Head Light
Under front column	Fuse, WARNING 15A	FUSE, 15A CY-198535-52130	Protect wiring & electric equipment related to Reverse Override, Tail, and Turn / Hazard Light.
Under front column	Flasher Relay Unit	UNIT, FLUSHER CY-1A6780-57200	Turn ON flashers
Fuel tank top face	Fuel Gauge Sender	SENDER ASSY, FUEL CY-1A7880-56600	Detect the amount of fuel and transform it to the resistance value
Fender	Turn / Hazard Light L / R	LAMP, ASSY, FLASHER CY-1A7880-53400	Bulb: BULB CY-1A7880-53430
Fender	Tail Light L / R	LAMP, TAIL CY-1A7335-53600	Bulb: BULB, 12V-21/5W CY-1A7335-53610

Instrument Panel Circuit Diagram

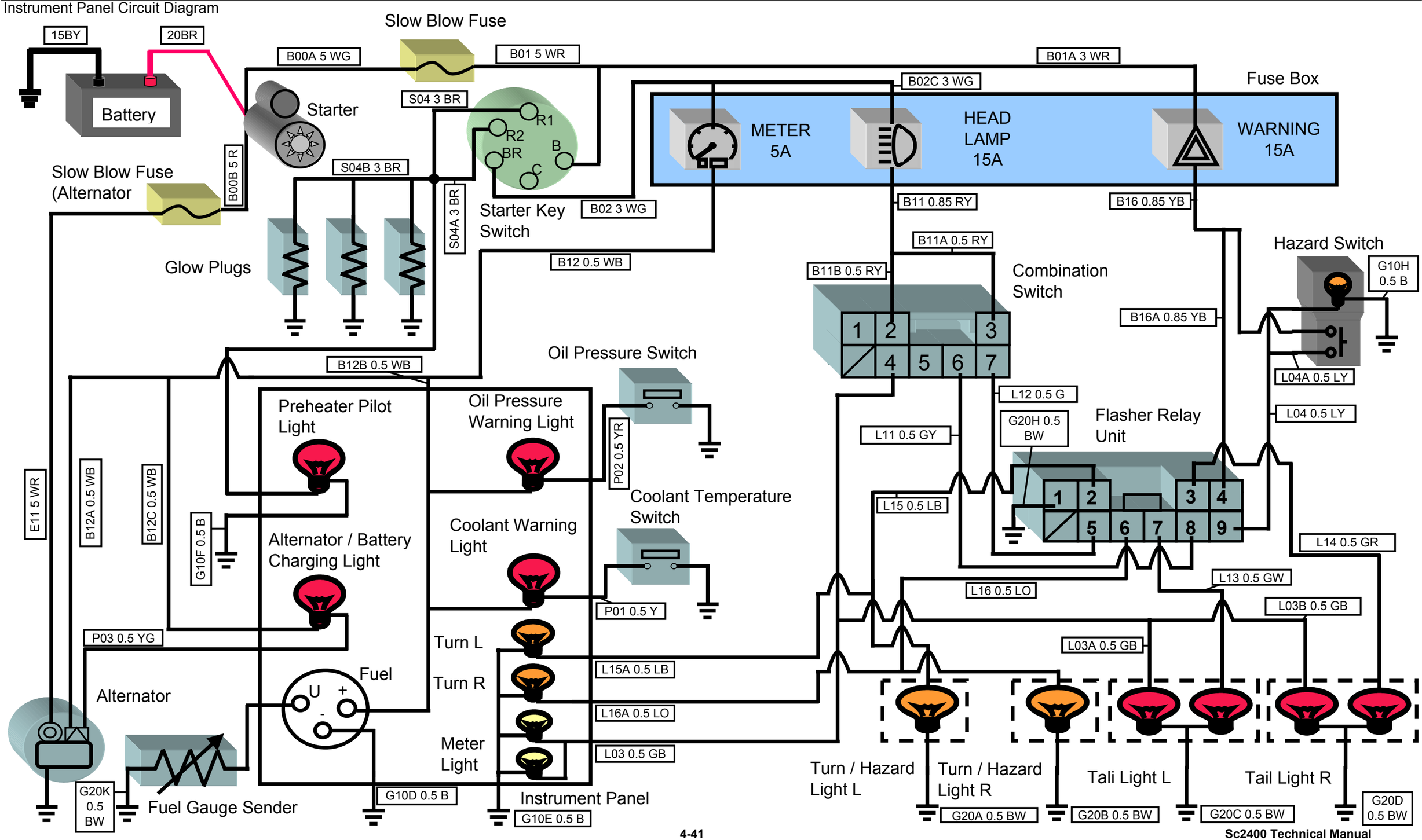

Items to Check on the Electrical Components

Oil Pressure Switch

SWITCH, (0.5KG)L.O.: CY-114250-39450

Simgle item check

Range	Measurement location		Result
	Tester electrode +	Tester electrode -	
Conductivity	(1)	Chasis ground	Continued while Engine is stopped. Discontinued while Engine is running.
DCV	(2)	Chasis ground	12 VDC when Starter Key Switch is turned on. As for DCA, Oil Pressure Warning Light is lit up at approx. 0.08A

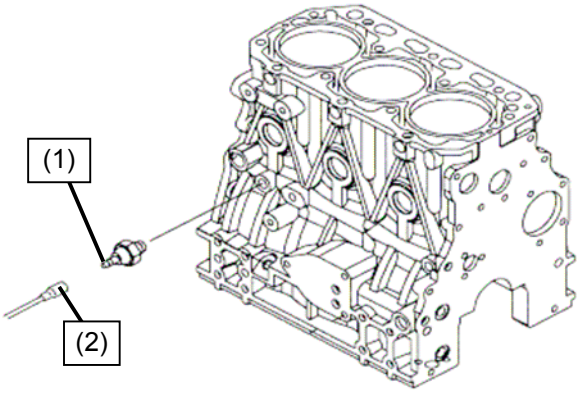

As for DCA, pay attention to prevent wrong connection of the tester.
*Oil pressure setting : 39.2 - 58.8 psi
(0.4 - 0.6 kgf/cm^2)

Coolant Temperature Switch

SWITCH, THERMO (110C: CY-12150-44901

Single item check

Range	Measurement location		Status	Result
	Tester electrode +	Tester electrode -		
Conductivity	(1)	Chasis ground	Room temperature	Not Conductive

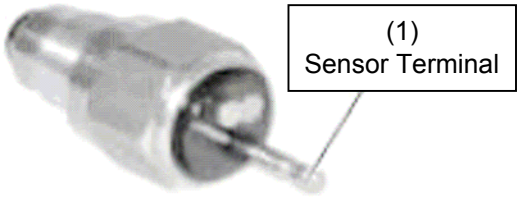

Starter

Please see "Starter" in Cranking circuit.

Alternator

Please see "Alternator" in Charging circuit.

Starter Key Switch

Please see "Starter Key Switch" in Cranking circuit.

Fuel Gauge Sender

SENDER ASSY, FUEL: CY-1A7880-56600

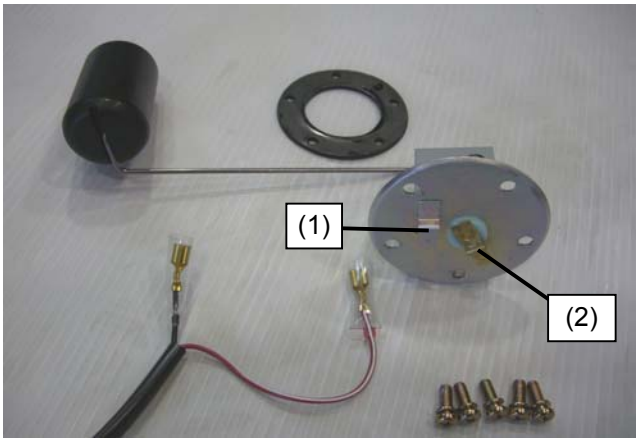

Single item check

Range	Measurement location		Float Position	Result
	Tester electrode +	Tester electrode -		
Resistance	(1)	(2)	**F**	3 ± 2 Ω
			1/2	(32.5Ω)
			E	110 ± 7 Ω

*Values in parenthesis are references.

Combination Switch

Please see "Combination Switch" in Light circuit.

Hazard Switch

Please see "Hazard Switch" in Light circuit.

Flasher Relay Unit

Please see "Flasher Relay Unit" in Light circuit.

5-6 Light Circuit Diagnosis

Function:

It supplies electricity to Headlights, Tail Lights, Side Lights, Turn Signal / Hazard Lights, and Meter Lights of different combinations by the position where a light switch is put.

When this circuit works:

Starter Key Switch	On (Engine off)
Light Switch	On (Each switch)

Even in off position of Starter Key Switch, Hazard Lights can light intermittently. This is because Hazard circuit does not go through Starter Key Switch.

Test

1 Hazard Lights Button Switch

When the test is done:

Starter Key Switch	Off (Engine Off)
Hazard Lights Button Switch	On

Good Result: Battery voltage
If Result is NOT Good: Check B16 (YB) wire and connections. If O.K., Warning 15A Fuse (BOX) and replace if necessary.

2 Hazard Lights Button Switch

When the test is done: same as above

Good Result: Lighting
If Result is NOT Good: Check L04 (LY), L04A (LY), and G10H (B) wires and connections. If O.K., check Hazard Lights Button Switch and replace if necessary.

3 Flasher Relay Unit B16A (YB)

When the test is done: same as above

Good Result: Battery voltage
If Result is NOT Good: Check B16A (YB) wire and connections. If O.K., check Warning 15A Fuse (BOX) and replace if necessary.

4 Flasher Relay Unit L04 (LY)

When the test is done: same as above

Good Result: Battery voltage
If Result is NOT Good: Check L04 (LY) wire and connections. If O.K., check Hazard Lights Button Switch and replace if necessary.

5 Flasher Relay Unit G20H (BW)

When the test is done: same as above

Good Result: Continuity to ground
If Result is NOT Good: Check G20H (BW) wire and connections.

6 Turn Signal / Hazard Light (Left) L15 (LB)

When the test is done: same as above

Good Result: Intermittent Battery voltage
If Result is NOT Good: Check L15 (LB) wire and connections. If O.K., check Flasher Relay Unit and replace if necessary.

7 Turn Signal / Hazard Light (Left) G20A (BW)

When the test is done: same as above

Good Result: Continuity to ground
If Result is NOT Good: Check G20A (BW) wire and connections.

8 Turn Signal / Hazard Light (Right) L16 (LO)

When the test is done: same as above

Good Result: Intermittent Battery voltage
If Result is NOT Good: Check L16 (LO) wire and connections. If O.K., check Flasher Relay Unit and replace if necessary.

9 Turn Signal / Hazard Light (Left) G20B (BW)

When the test is done: same as above

Good Result: Continuity to ground
If Result is NOT Good: Check G20B (BW) wire and connections.

10 Combination Switch B11 (RY)

When the test is done:

Starter Key Switch	On (Engine Off)
Combination Switch	On

Good Result: Battery voltage
If Result is NOT Good: Check B11 (RY) wire and connections. If O.K., check Headlight 15 A Fuse (BOX) and replace if necessary.

11 Meter Light L03 (GB)

When the test is done: same as above

Good Result: Lighting and Battery voltage
If Result is NOT Good: Check B11 (RY) and G10E (B) wires and connections. If O.K., check Combination Switch and replace if necessary.

12 Meter Light G10E (B)

When the test is done: same as above

Good Result: Continuity to ground
If Result is NOT Good: Check G10E (B) wire and connections.

13 Relay (Headlight L01 (RW)

When the test is done: same as above

Good Result: Battery voltage
If Result is NOT Good: Check L01 (RW) wire and connections. If O.K., check Combination Switch and replace if necessary.

14 Relay (Headlight B30F (BY) and G20J (BW)

When the test is done: same as above

Good Result: Continuity to ground
If Result is NOT Good: Check B30F (BY) and G20J (BW) wires and connections.

15 Relay (Headlight B11 (BY)

When the test is done: same as above

Good Result: Battery voltage
If Result is NOT Good: Test Headlight 15 A Fuse (BOX). Check B11 (BY) wire and conections. If O.K., check Starter Key Switch and replace if necessary.

16 Headlight L L05 (RB)

When the test is done: same as above

Good Result: Battery voltage
If Result is NOT Good: Check L05 (RB) wire and conections. If O.K., check Relay (Headlight and replace if necessary.

17 Headlight L G10I (B)

When the test is done: same as above

Good Result: Continuity to ground
If Result is NOT Good: Check G10I (B) wire and conections.

18 Headlight R L05 (RB)

When the test is done: same as above

Good Result: Battery voltage
If Result is NOT Good: Check L05 (RB) wire and conections. If O.K., check Relay (Headlight and replace if necessary.

19 Headlight R G10I (B)

When the test is done: same as above

Good Result: Continuity to ground
If Result is NOT Good: Check G10I (B) wire and conections.

20 Side Light L L02 (R)

When the test is done: same as above

Good Result: Battery voltage
If Result is NOT Good: Check L02 (R) wire and conections. If O.K., check Combination Switch and replace if necessary.

21 Side Light L G10A (B)

When the test is done: same as above

Good Result: Continuity to ground
If Result is NOT Good: Check G10A (B) wire and conections.

22 Side Light R L02B (R)

When the test is done: same as above

Good Result: Battery voltage
If Result is NOT Good: Check L02B (R) wire and conections. If O.K., check Combination Switch and replace if necessary.

23 Side Light R G10B (B)

When the test is done: same as above

Good Result: Continuity to ground
If Result is NOT Good: Check G10B (B) wire and conections.

24 Tail Light L L03A (GB)

When the test is done: same as above

Good Result: Battery voltage
If Result is NOT Good: Check L03A (GB) wire and conections. If O.K., check Combination Switch and replace if necessary.

25 Tail Light L G20C (BW)

When the test is done: same as above

Good Result: Continuity to ground
If Result is NOT Good: Check G20C (BW) wire and conections.

26 Tail Light R L03B (GB)

When the test is done: same as above

Good Result: Battery voltage
If Result is NOT Good: Check L03B (GB) wire and conections. If O.K., check Combination Switch and replace if necessary.

27 Tail Light R G20D (BW)

When the test is done: same as above

Good Result: Continuity to ground
If Result is NOT Good: Check G20D (BW) wire and conections.

Location	Parts name	Parts catalogue name Parts catalogue number	Operation and remarks
Front of hood	Head Light	LAMP, ASSY, HEAD CY-1A7880-53050	Bulb: BULB, HALOGEN 12V30/30 CY-1A7880-53080
Front of hood	Side Light L / R	LAMP, ASSY, SIDE CY-1A7880-53300	Bulb: BULB, 12V/15W CY-1A7880-53320
Engine right side	Slow Blow Fuse	BLOW, SLOW FUSE 60A CY-1A6240-51630	Protect wiring & electric equipment related to light circuit
Front column	Starter Key Switch	SWITCH ASSY, STARTER CY-198226-52100	Used for ON/OFF of Battery power to the circuits.
Front column	Combination Switch	SWITCH, COMBINATION CY-1A7880-52140	For operation of Head Light and Turn Signal Flasher
Front column	Hazard Switch	HAZARD SW CY-1A7335-52120	Cause the button light up and the hazard lights at the rear of tractor to flash
Front column	Turn L / R (Instrument Panel)	BULB CY-1A7510-56110	When Turn signal or Hazard is activated, it blinks.
Front column	Meter Light (Instrument Panel)	BULB, 14V-1.4W CY-198448-56150	When Combination Switch is activated, this light illuminates.
Under front column	Battery	BATTERY, 26R, ASSY CY-1A8160-51500	Supplies power to the circuits.
Under front column	Flasher Relay Unit	UNIT, FLUSHER CY-1A6780-57200	Turn ON flashers
Under front column	Fuse, HEAD LAMP 15A	FUSE, 15A CY-198535-52130	Protect wiring & electric equipment related to Head Light
Under front column	Fuse, WARNING 15A	FUSE, 15A CY-198535-52130	Protect wiring & electric equipment related to Reverse Override, Tail, and Turn / Hazard Light.
Inside dashboard cover	Relay (Head Light	RELAY, ACM 13211M01 CY-1K1140-82500	When activated, this supplies power to Head Light.
Inside dashboard cover	Diode 3A (Relay1	DIODE, 3.0AX2 CY-1A8160-51130	Protect Combination Switch from the reverse battery
Inside dashboard cover	Diode 3A (Relay2	DIODE, 3.0AX2 CY-1A8160-51130	Protect Relay (Head Light from the reverse battery
Fender	Turn / Hazard Light L / R	LAMP, ASSY, FLASHER CY-1A7880-53400	Bulb: BULB CY-1A7880-53430
Fender	Tail Light L / R	LAMP, TAIL CY-1A7335-53600	Bulb: BULB, 12V-21/5W CY-1A7335-53610

Light Circuit Diagram

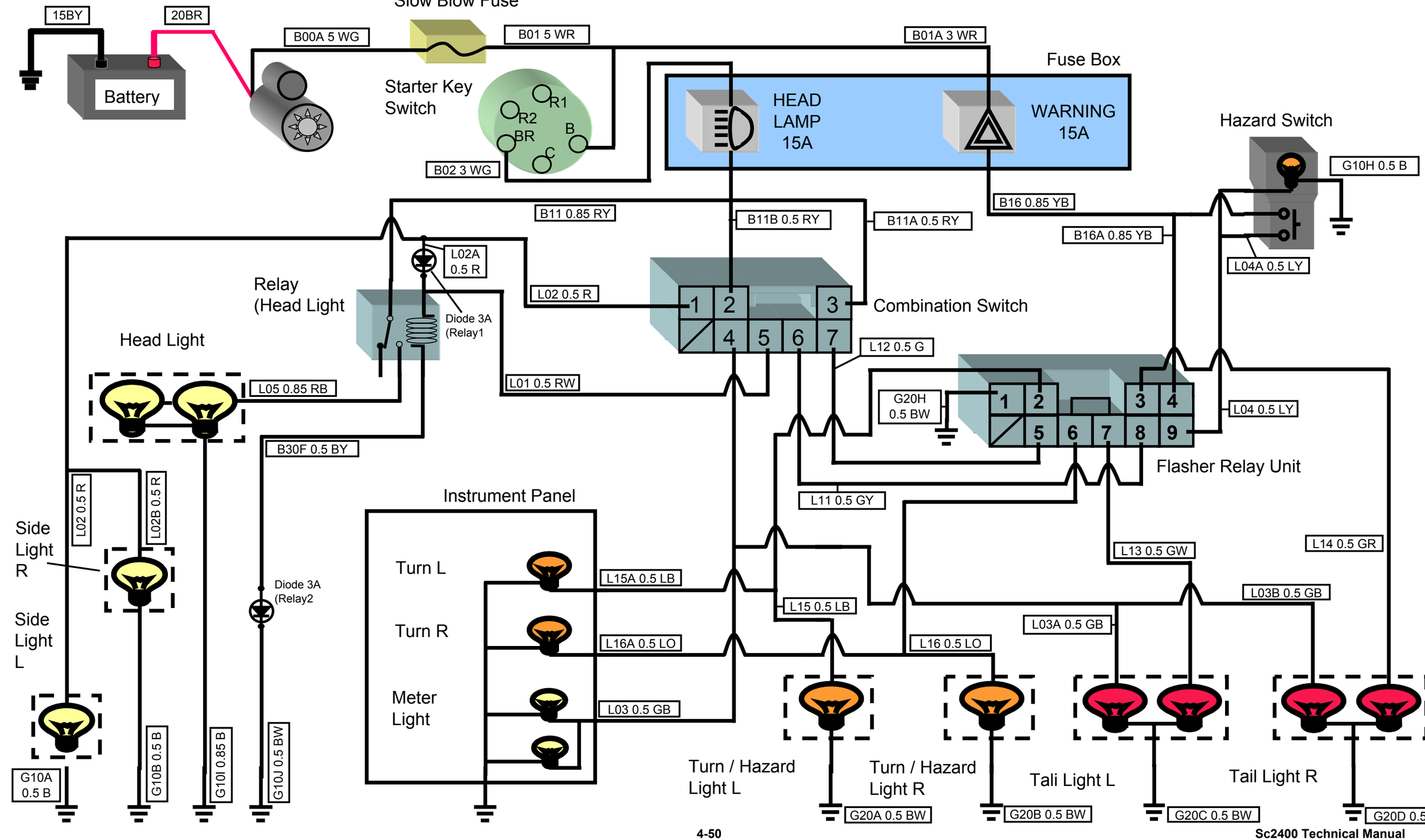

Items to Check on the Electrical Components

Combination Switch

SWITCH, COMBINATION: CY-1A7880-52140

Connections of switch terminals

Range	Measurement location		Status	Result
	Tester electrode +	Tester electrode -		
Conductivity	(2)	(4)	Head lights only	Conductive
	(2)	(5)		
	(4)	(5)		
	(2)	(4)	Head and side lights	
	(2)	(1)		
	(4)	(1)		
	(3)	(6)	Left turn	
	(3)	(7)	Right turn	

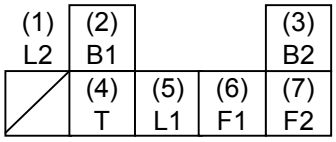

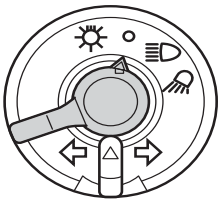

Light Switch				
	B1	T	L1	L2
OFF				
Head lights only	●	●	●	
Head and side lights	●	●		●

Turn Switch			
	B2	F1	F2
Left turn	●	●	
OFF			
Right turn	●		●

Hazard Switch

HAZARD SW: CY-1A7335-52120

Range	Measurement location		Status	Result
	Tester electrode +	Tester electrode -		
Conductivity	(1)	(2)	Switch "OFF"	Not Conductive
			Switch "ON"	Conductive
	(3)	(4)	Light	Conductive

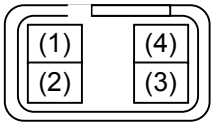



Flasher Relay Unit

UNIT, FLASHER: CY-1A6780-57200

Range	Measurement location		Status	Result
	Tester electrode +	Tester electrode -		
Resistance	(2)	(1)		Approx. 1800 ohms
	(3)	(1)		
	(4)	(1)		Approx. 2100 ohms

There should not be continuity between any other terminals.

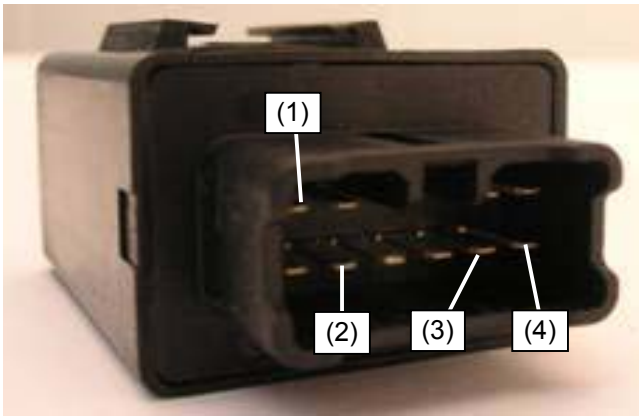

5-7 PTO Stop Circuit Diagnosis

Function:

PTO stops when the tractor goes in reverse with PTO switch "ON". This is because the system stops to provide electricity to PTO solenoid.
If REVERSR OVERRIDE SWITCH is "ON", PTO is still rotating while the tractor is going in reverse.
Once REVERSE OVERRIDE SWITCH is pushed (That means switch "ON"), it holds this mode until the engine is shut off (Key position "OFF").

When this circuit works:

Engine	On
PTO Switch	On
Reverse Switch	On (Drive Pedal is stepped to Reverse)

The result is "PTO stops".
OR

Engine	On
PTO Switch	On
Reverse Overide Switch	On (Switch is lighted)
Reverse Switch	On (Drive Pedal is stepped to Reverse)

The result is "PTO does NOT stop".

Test

1 PTO Switch

When the test is done:

Starter Key Switch	On (Engine Off)
PTO Switch	On
Reverse Switch	Off (Drive Pedal is not stepped)
Reverse Overide Switch	Off (Not lighted)

Good Result: Battery voltage
If Result is NOT Good: Check B15 (LW) wire and connections. If O.K., check PTO 5 A Fuse (BOX) and replace if necessary.

2 Reverse Switch

When the test is done: same as above

Good Result: Battery voltage
If Result is NOT Good: Check B25 (YR) wire and connections. If O.K., check PTO Switch and replace if necessary.

3 PTO Relay

When the test is done: same as above

Good Result: Battery voltage
If Result is NOT Good: Check B32 (O) wire and connections. If O.K., check Reverse Switch and replace if necessary.

4 PTO Solenoid

When the test is done: same as above

Good Result: Battery voltage
If Result is NOT Good: Check B20 (P) wire and connections. If O.K., check PTO Relay and replace if neessary.

5 PTO Solenoid G20E (BW)

When the test is done: same as above

Good Result: Continuity to ground
If Result is NOT Good: Check G20E (BW) wire and connections.

6 Reverse Overide Switch

When the test is done:

Starter Key Switch	On (Engine Off)
PTO Switch	On
Reverse Switch	Off (Drive Pedal is not stepped)
Reverse Overide Switch	On (lighted)

Good Result: Battery voltage
If Result is NOT Good: Check B15B (LW) wire and connections. If O.K., check PTO 5 A Fuse(BOX) and replace if necessary.

7 Relay (R / O

When the test is done: same as above

Good Result: Battery voltage
If Result is NOT Good: Check B31A (G) and B31B (G) wires and connections. If O.K., check Reverse Overide Switch and replace if necessary.

8 Diode 3A (Relay2

When the test is done: same as above

Good Result: Battery voltage
If Result is NOT Good: Check B30D (BY) and G20J (BW) wires and connections. If O.K., check Relay (R/O and replace if necessary.

9 Reverse Overide Switch Light

When the test is done: same as above

Good Result: Battery voltage
If Result is NOT Good: Check B31C (G) and G20I (BW) wires and connections. Test bulb. If O.K., check Reverse Overide Switch and replace if necessary.

10 Diode 3A (PTO

When the test is done: same as above

Good Result: Battery voltage
If Result is NOT Good: Check B31 (G) wire and connections. If O.K., check Reverse Overide Switch and replace if necessary.

Location	Parts name	Parts catalogue name Parts catalogue number	Operation and remarks
Engine right side	Slow Blow Fuse	BLOW, SLOW FUSE 60A CY-1A6240-51630	Protect wiring & electric equipment related to PTO stop
Front column	Starter Key Switch	SWITCH ASSY, STARTER CY-198226-52100	Used for ON/OFF of Battery power to the circuits.
Under front column	Battery	BATTERY, 26R, ASSY CY-1A8160-51500	Supplies power to the circuits.
Under front column	Fuse, PTO 5A	FUSE, 5A CY-198535-52110	Protect wiring & electric equipment related to PTO
Inside dashboard cover	Diode 3A (Relay2	DIODE, 3.0AX2 CY-1A8160-51130	Protect Relay (R/O from the reverse battery
Under step	Reverse Switch	SWITCH NC, PEDAL CY-1A7880-52210	Detect whether Drive pedal is stepped backward or not. This is normal close type. When Drive pedal stepped backward, this switch is ON, that is, this switch DOES NOT allow currency to go through.
Left side fender	PTO Switch	PTO, SWITCH CY-172531-17300	Detect whether switch ON (Pull up) on not.
Left side fender	Reverse Override Switch	SWITCH NL(Y CY-1A7880-52250	Enable the tractor to operate PTO while it is traveling in the reverse direction (Reverse Override function). Once Reverse Override Switch is activated and lit, the reverse override function cannot be disabled unless the engine is stopped.
Above transmission housing	PTO Relay	RELAY, ACM 13211M01 CY-1K1140-82500	Supplies power to PTO solenoid.
Above transmission housing	PTO Solenoid	SOLENOID ASSY CY-192159-27700	While this is receiving power, its bushing pin pushes down the spool to activate PTO.
Above transmission housing	Diode 3A (PTO	DIODE, 3.0AX2 CY-1A8160-51130	Protect PTO Relay from the reverse battery
Above transmission housing	Relay (R/O	RELAY, ACM 13211M01 CY-1K1140-82500	Supplies power to PTO Relay

PTO Stop Circuit Diagram

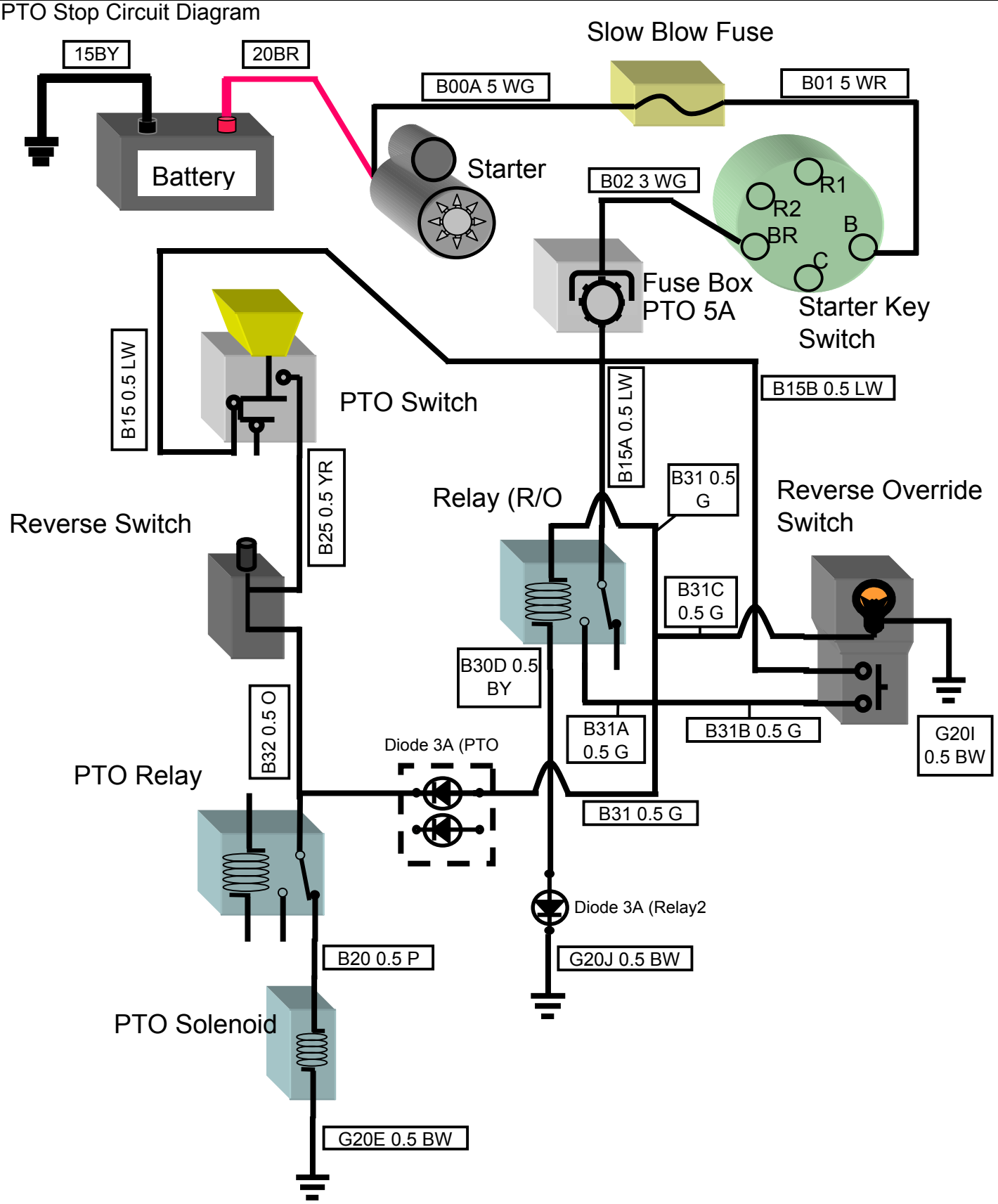

Items to Check on the Electrical Components

Starter Key Switch

Please see "Starter Key Switch" in Cranking circuit.

Reverse Switch

Please see "Brake Pedal Switch" in Cranking circuit.

PTO Switch

Please see "PTO Switch" in Cranking circuit.

Reverse Override Switch

SWITCH NL(Y: CY-1A7880-52250

Range	Measurement location		Status	Result
	Tester electrode +	Tester electrode -		
Conductivity	(1)	(2)	Switch "OFF"	Not Conductive
			Switch "ON"	Conductive
	(3)	(4)	Light	Conductive

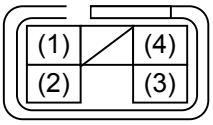



5-8 Other Circuit Diagnosis

Function:

-Fuel Feed Pump Circuit
Circuit supplies electricity to Fuel Feed pump. It sends Fuel Fuel tank to Engine.

-DC Outlet Circuit
DC Outlet supplies electricity to a electric device.

-Work Light Circuit
Circuit supplies electricity to Work Light installed on ROPS.

When this circuit works: Fuel Feed Pump and DC Outlet Circuit

Starter Key Switch	On or Start

When this circuit works: Work Light Circuit

Every switch	Nothing to do with switches position

Location	Parts name	Parts catalogue name Parts catalogue number	Operation and remarks
Engine right side	Slow Blow Fuse	BLOW, SLOW FUSE 60A CY-1A6240-51630	Protect wiring & electric equipment related to PTO stop
Engine left side	Fuel Feed Pump	PUMP, FUEL FEED CY-119225-52102	Supply the fuel to the fuel injection pump
Front column	Starter Key Switch	SWITCH ASSY, STARTER CY-198226-52100	Used for ON/OFF of Battery power to the circuits.
Under front column	Battery	BATTERY, 26R, ASSY CY-1A8160-51500	Supply power to the circuits.
Under front column	Fuse, FUEL PUMP 5A	FUSE, 5A CY-198535-52110	Protect wiring & Fuel feed pump
Under front column	Fuse, DC OUTLET 10A	FUSE, 10A CY-198535-52120	Protect wiring & DC outlet
Under front column	Fuse, WORK LIGHT 10A	FUSE, 10A CY-198535-52120	Protect wiring & Work light
Right side fender	DC Outlet	DC POWER OUTLET CY-1A7880-57100	Supply power to the electrical device
Under fender (Right side)	Coupler for Work light	HARNESS ASSY, WIRE CY-1A7880-51101	Supply power to Work light

Other Circuit Diagram

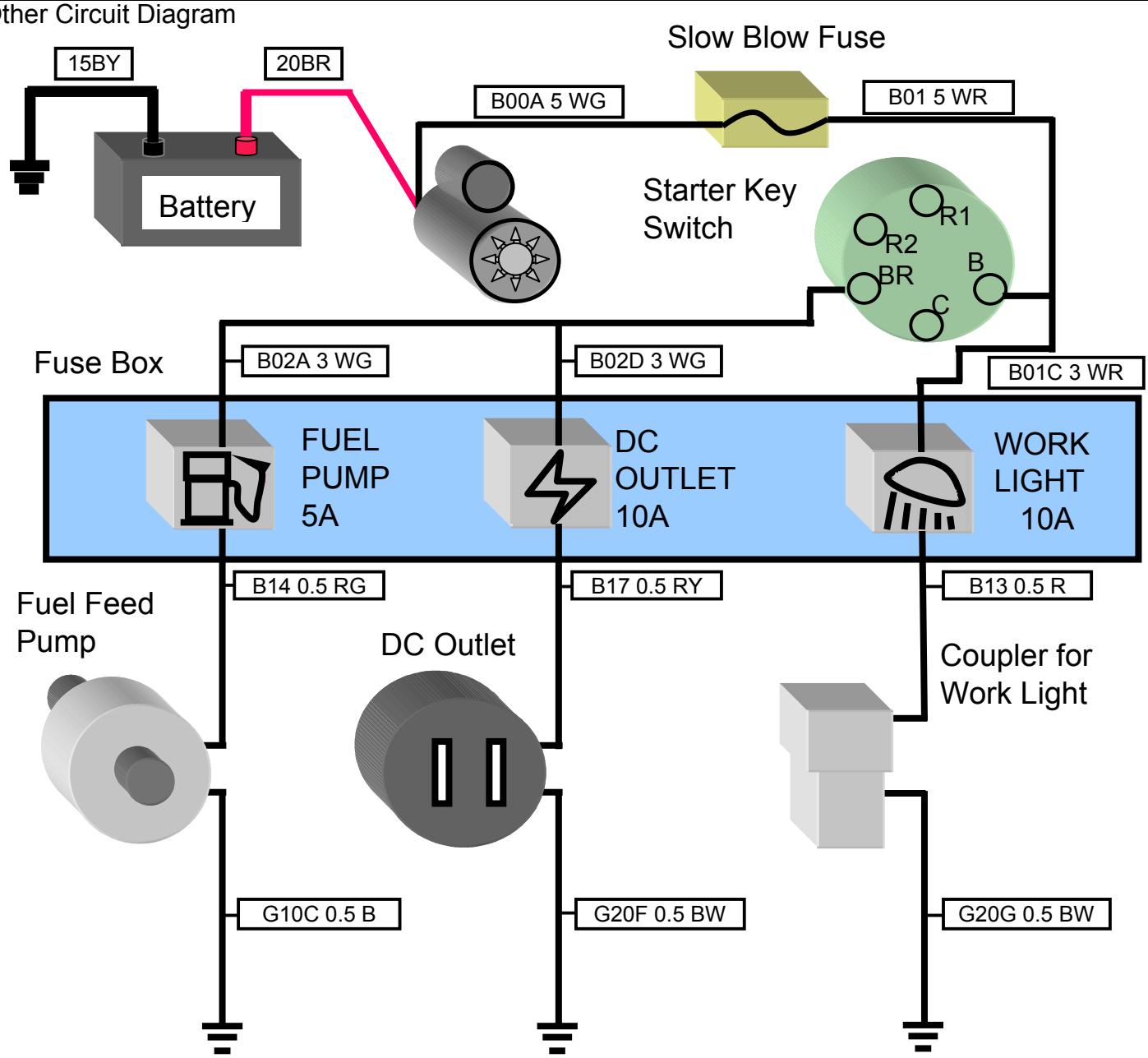

Items to Check on the Electrical Components

Starter Key Switch

Please see "Starter Key Switch" in Cranking circuit.

Fuel Feed Pump

PUMP, FUEL FEED: CY-119225-52102



Individual component check

Range	Measurement location			Result
	Tester electrode +	Tester electrode -		
Resistance	(1)	(2)		Approx. 11 MΩ
Conductivity	(2)	(1)		Not Conductive

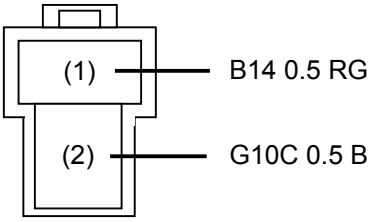

6 Diagnosis and replacement work for electrical components

6-1 General

Case	Possible Cause	Treatment
No electrical equipment functions	Battery is discharged completely	Replace
	The positive or negative terminals of Battery or cables are corroded or are not firmly connected.	Clean and reconnect tightly
	Slow Blow Fuse has blown.	Replace after checking wiring is not short-circuited.
Fuse often blows.	There is a short-circuit.	Check the wiring for a possible short circuit. If there is, replace or repair.

6-2 Engine

Case	Possible Cause	Treatment
Starter does not engage.	Battery is discharged completely.	Replace
	The positive or negative terminals of Battery or cal	Clean and reconnect tightly.
	Slow Blow Fuse has blown.	Replace after checking wiring is not short-circuited.
	Failed Start Relay	Replace
	Failed Failed Starter	Replace
	Failed PTO Switch	Replace
	Failed Brake Pedal Switch	Replace
	Failed HST Neutral Switch	Replace
	Failed Safety Relay (HST	Replace
	Wiring harness disconnected or improperly connected	Reconnect completely
Engine does not stop when Starter Key Switch is turned off.	Wiring harness disconnected or improperly connected	Reconnect completely
	Failed Fuel Shut Off Solenoid	Replace
	Failed Fuel Relay	Replace
Engine does not start	Wiring harness disconnected or improperly connected	Reconnect completely
	Failed Fuel Shut Off Solenoid	Replace
	Failed Fuel Relay	Replace

6-3 Charging

Case	Possible Cause	Treatment
Alternator / Battery Charging Light does not turn on when Starter Key Switch is set to On position (Engine is not running)	Fuse has Blown (Meter 5A)	Replace after checking wiring is not short-circuited
	Wiring has not been correctly connected	Reconnect completely
	Failed Alternator	Replace
Alternator / Battery Charging Light soes not turn off when Engine is running smoothly	Occurrence of short-circuit (most possibly, between Alternator and Instrument Panel)	Check the wiring for possible short-circuit. If short-circuit is found, replace or repair the problem area.
	Slow Blow Fuse has blown	Replace
	Failed Alternator	Replace
Battery discharges quickly	Failed Battery	Replace
	Failed Alternator	Replace
	Slipping of the fan belt	Adjust or replace

6-4 Light

Case	Possible Cause	Treatment
Headlights do not light up	Blown fuse (Headlight 15A)	Replace after checking wiring is not short-circuited
	Bulb of headlight has blown	Replace
	Wiring has not been correctly connected	Reconnect completely
	Failed Combination Switch	Replace
Turn Signal Lights do not light u	Blown fuse (Headlight 15A)	Replace after checking wiring is not short-circuited
	Bulb of the light has blown	Replace
	Wiring has not been correctly connected	Reconnect completely
	Failed Combination Switch	Replace
	Failed Flasher Relay Unit	Replace
Tail lights do not light up	Blown fuse (Headlight 15A)	Replace after checking wiring is not short-circuited
	Bulb of the light has blown	Replace
	Wiring has not been correctly connected	Reconnect completely
	Failed Combination Switch	Replace
	Failed Flasher Relay Unit	Replace
Hazard Lights do not light up	Blown fuse (Warning 15A)	Replace after checking wiring is not short-circuited
	Bulb of the light has blown	Replace
	Wiring has not been correctly connected	Reconnect completely
	Failed Hazard Switch	Replace
	Failed Flasher Relay Unit	Replace

5. POWER TRAIN - HYDROSTATIC

1. Table of Contents

2. Component Location 5-3
2-1 Power Train-Transaxle 5-3
2-2 Front Drive 5-4
2-3 Final Drive 5-5
2-4 Front Axle Gear Case 5-6
2-5 Rear Power Take Off (PTO) Gear Case Assembly 5-7
3. Theory of Operation 5-8
3-1 Principle 5-8
3-2 Releasing the Hydraulic Pressure in the Transaxle 5-24
3-3 Gear Pump 5-24
4. Diagnostics 5-26
4-1 Transmission Problems & Symptoms 5-26
4-2 Problems & Symptoms with the Power Take Off (PTO) 5-31
4-3 Problems & Symptoms with Transaxle Differential 5-33
4-4 Hydro Static Transmission (HST) Test (Condition: Engine stopped) 5-35
4-5 Hydro Static Transmission (HST) Test (Condition: Engine running) 5-39
4-6 Axle does not Rotate 5-41
4-7 Machine Speed is Extremely Slow 5-41
4-8 Stopping Distance is Extremely Long 5-41
4-9 Stopping Distance is Extremely Short 5-41
4-10 Axle does not Stop in a Neutral State 5-42
4-11 Brake Malfunctions 5-42
4-12 Differential Lock Malfunctions 5-42
4-13 Power Take Off (PTO) RPM is Extremely Low 5-42
4-14 Extremely Long Power Take Off (PTO) Stopping Time 5-42
4-15 Power Take Off (PTO) Malfunctions 5-43
4-16 Power Take Off (PTO) does not Stop Normally 5-43
4-17 A Discharge Flow Rate for External Take-Off is Extremely Low 5-43
4-18 Noise 5-44
4-19 Oil Oozes or Leaks 5-44
4-20 Troubleshooting for Hydro Static Transmission (HST) 5-45
4-21 Check items for servicing 5-48
5. Test and Adjustment 5-50
5-1 Hydro Static Transmission (HST) Link Adjustment 5-50
5-2 Operation System Right Side Rod 5-51
5-3 Warming Up the Hydraulic Oil 5-54
5-4 Testing the Power Take Off (PTO) Engagement Pressure and Brakes 5-55
5-5 Adjusting the Transaxle for Neutral Creep 5-61
5-6 Adjusting the Transaxle Control Linkage 5-64
5-7 Criteria for Replacing Parts 5-65
6. Repair 5-71
6-1 Disassembling Procedure 5-71
6-2 Assembling Procedure 5-114
6-3 Disassembling and Assembling (Front Axle) 5-182

2. Component Location

2-1 Power Train-Transaxle

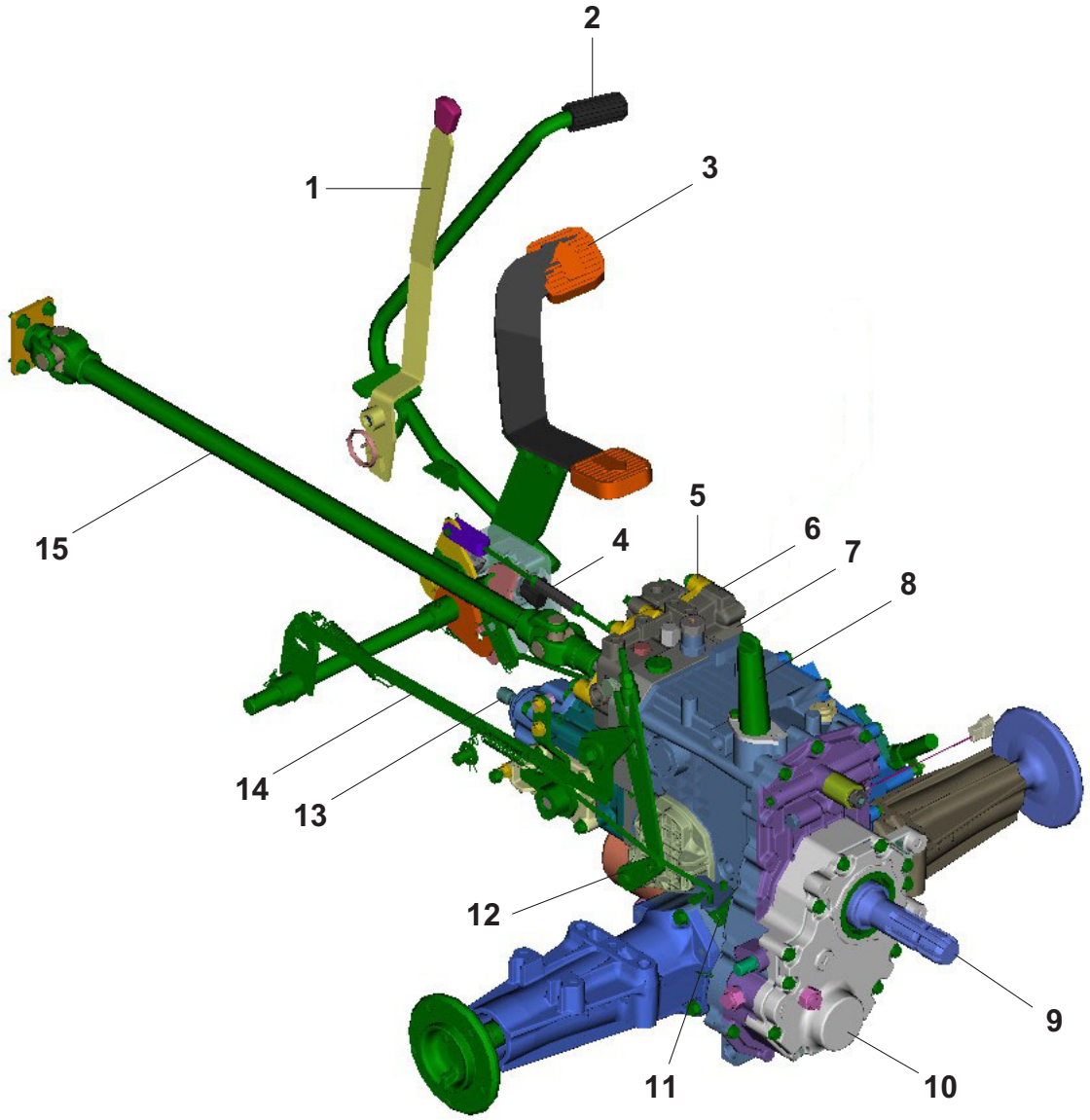

1. Parking Brake Lever
2. Brake Pedal
3. Forward and Reverse Drive Pedal
4. Rod ASSY., HST
5. PWS-5CG Sub
6. Pump Body K93
7. Center Case K93
8. Oil Fill Tube
9. Rear PTO Shaft
10. Cover, Rear PTO Case
11. Fulcrum Kit, Differential
12. Shaft ASSY., Lever
13. Shaft PTO
14. Rod Brake
15. Shaft Drive

2-2 Front Drive

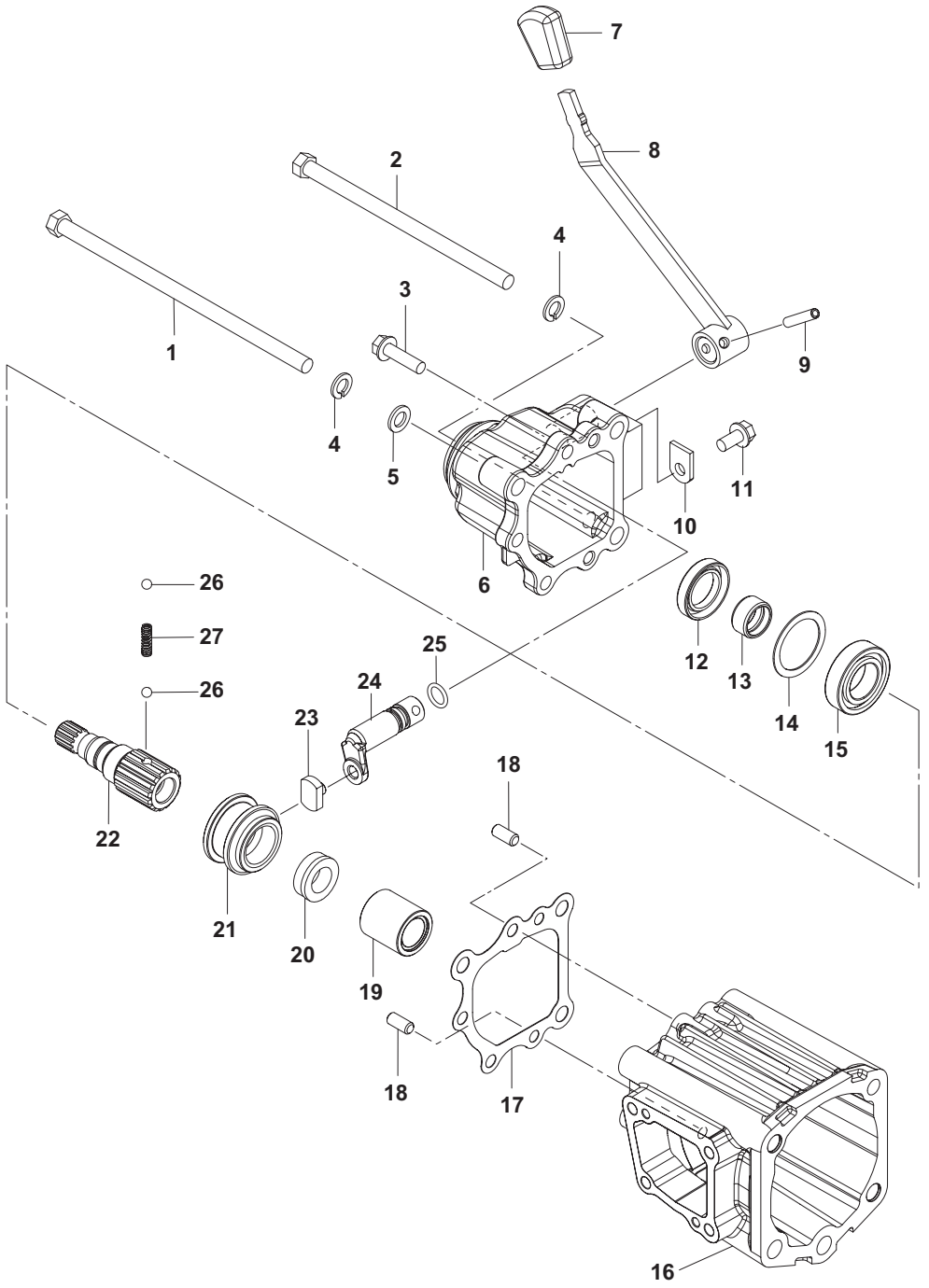

1. Bolt, 10 x 220 (L: 8.8 in.)
2. Bolt, 10 x 180 (L: 7.2 in.)
3. Bolt, 8 x 30 (L: 1.2 in.)
4. Washer, 10
5. Washer, 10
6. Cover, Front
7. Knob,
8. Lever, 4WD
9. Pin, 6.0 A x 32
10. Plate, Keep
11. Bolt, 8 x 16 (L: 0.64 in.)
12. Seal, TC 254008
13. Sleeve, S I20 x 25 x 13
14. Washer, 36 x 46 x 1
15. Bearing, 6005 NTN
16. Motor Case K-93
17. Packing, Front Cover
18. Pin, 8 x 16
19. Spacer, 20 x 33 x 285
20. Collar, Front Spline
21. Collar, Front Shift
22. Shaft, Front Drive
23. Block, Shift Front
24. Shift, Shaft 4WD
25. Packing, P 12.5
26. Ball, 1 / 4
27. Spring, 21.2

2-3 Final Drive

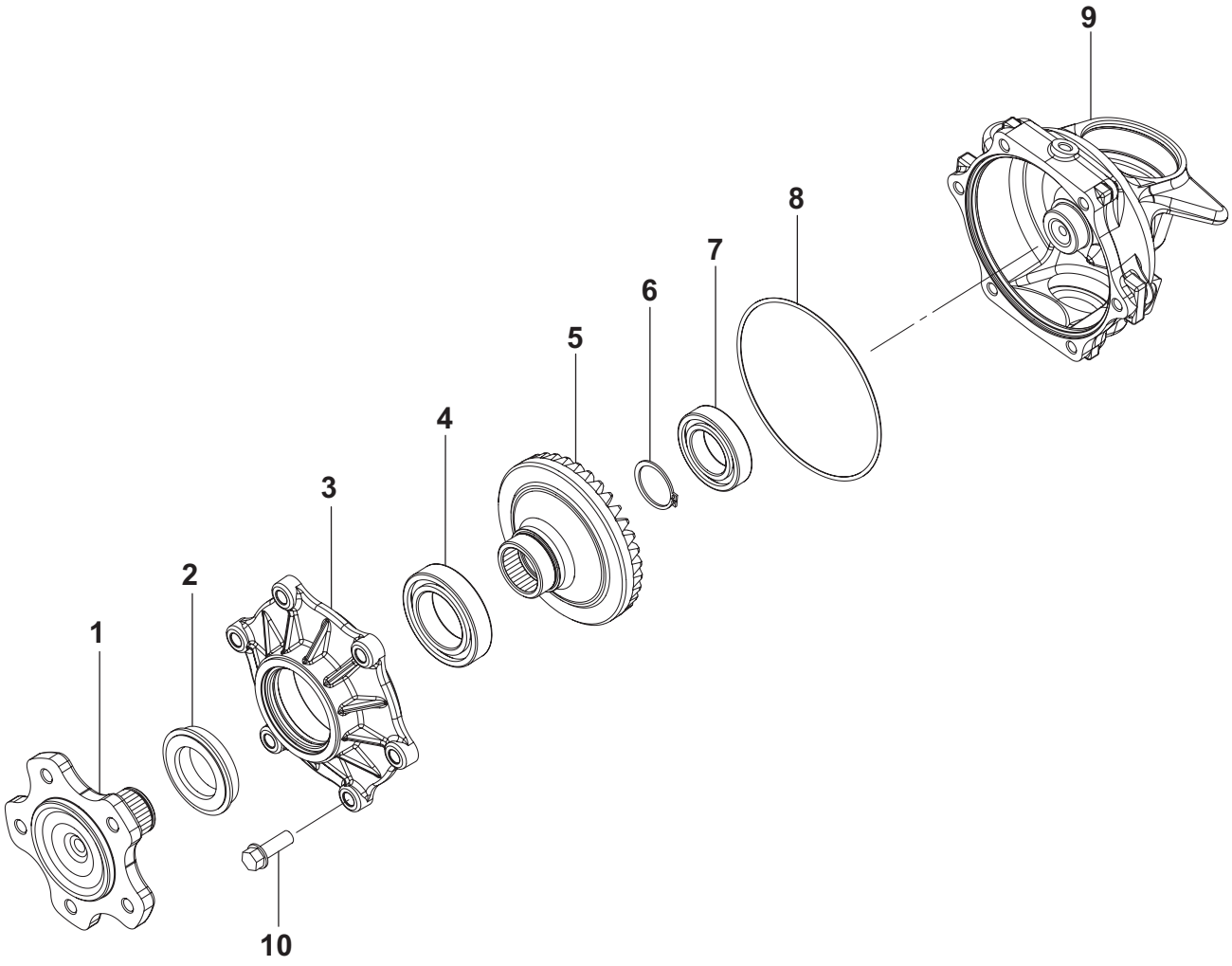

1. Spindle, Front
2. Seal, Qlfy 40 x 62 x 14
3. Case, Front Bearing
4. Bearing, 6009 NTN
5. Gear F, Final
6. Ring, 34
7. Bearing, 6007 NTN
8. Packing, G130.0
9. Box L, Front Gear
10. Bolt, 10 x 30 (L: 12 in.)

2-4 Front Axle Gear Case

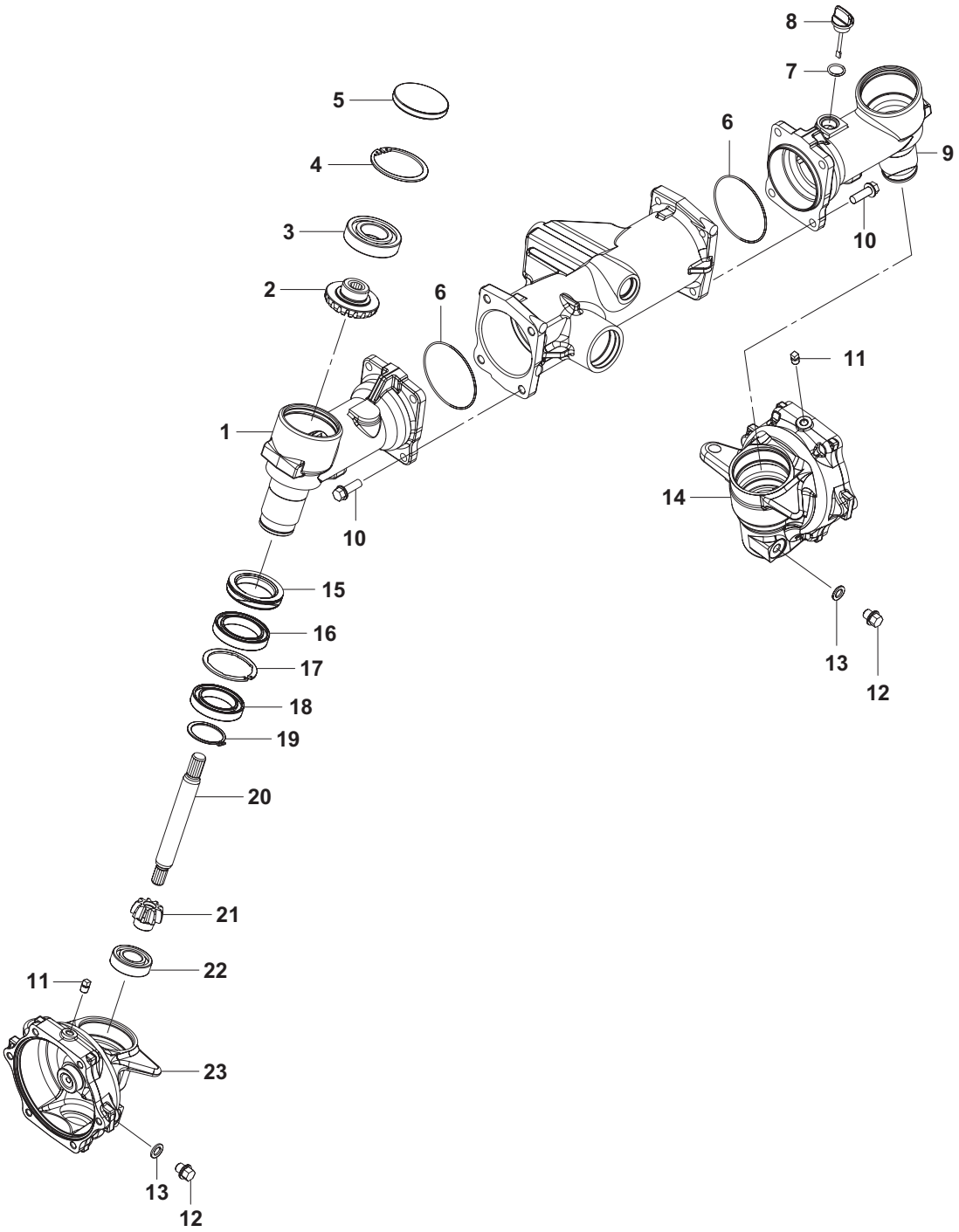

1. Case L, Front Gear
2. Gear 20T, Bevel
3. Bearing, 6207
4. Ring, 72
5. CAP, Sealing 72
6. Packing, S 90.0
7. Packing, P 18.0
8. Gauge, Oil Level
9. Case R, Front Gear
10. Bolt, 10 x 30 (L: 12 in.)
11. Plug, PF02
12. Bolt, M12 x 12 (L: 0.48 in.)
13. Gasket, 20 x 12 x 2
14. Box R, Front Gear
15. Seal Qln 50721013
16. Bearing, 6910
17. Ring, 68
18. Bearing, 6909
19. Ring, 45
20. Shaft, Front 2
21. Pinion F, Final
22. Bearing, 6205 NTN
23. Box L, Front Gear

2-5 Rear Power Take Off (PTO) Gear Case Assembly

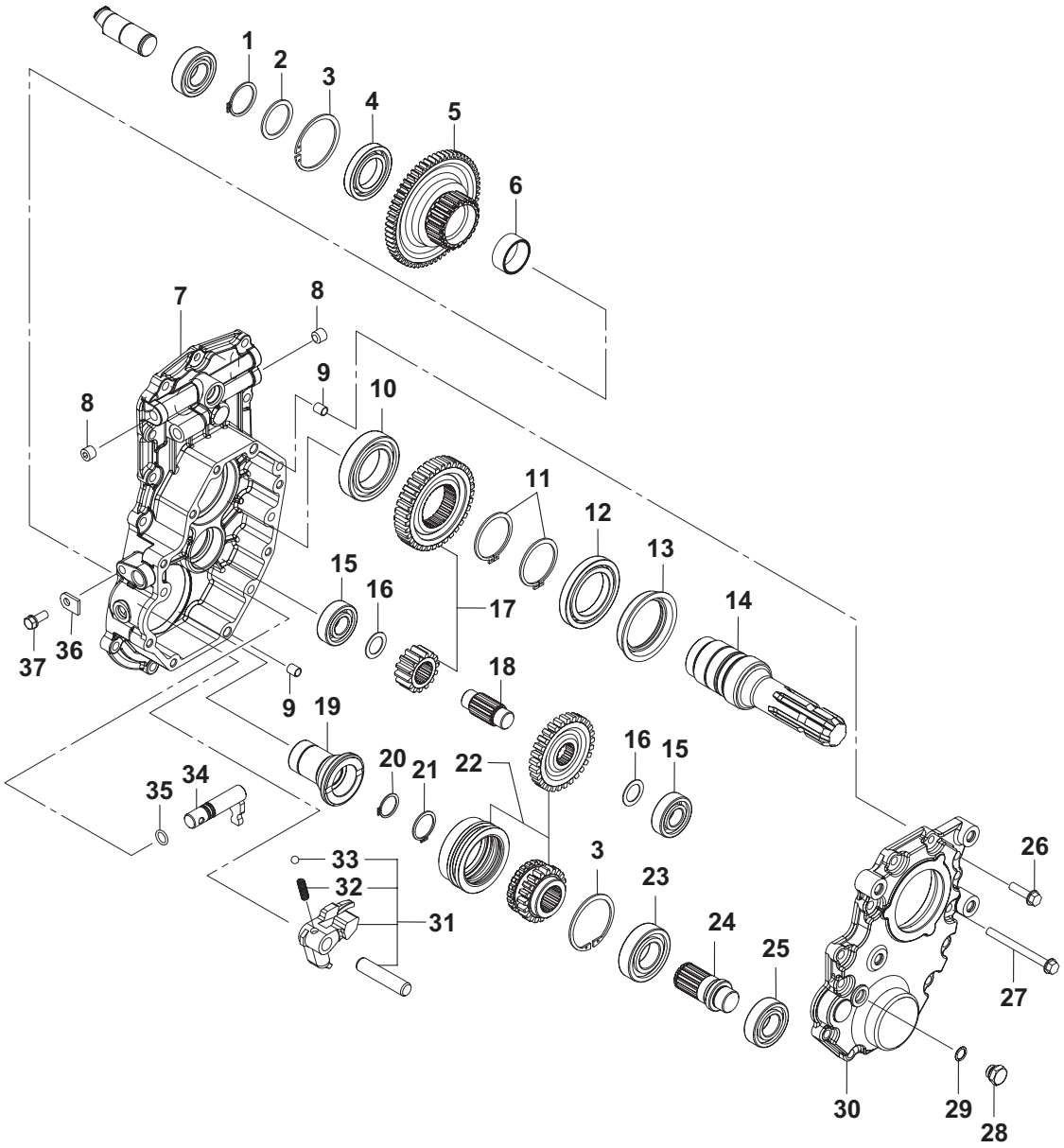

1. Ring, 35
2. Spacer, Clutch Shaft
3. Ring, 62
4. Bearing, 16007
5. Gear, PTO Z=62 B
6. Needle, 354017
7. Case, Rear PTO
8. Plug, R 02
9. Collar, 8 x 10 x 11.5
10. Bearing, 6009 NTN
11. Ring, 50
12. Bearing, 16010
13. Seal, TCFY 557214
14. Rear PTO Shaft
15. Bearing, 6204 RSH 2
16. Washer
17. Gear Kit, 14 - 35
18. Shaft, Rear PTO Idle
19. Collar, Spline
20. Ring, 24
21. Ring, 29
22. Gear Kit, 20 - 29
23. Bearing, 6206 NTN
24. Shaft, Rear PTO
25. Bearing, 6205 NTN
26. Bolt, 8 x 30 (L: 1.2 in.)
27. Bolt, 8 x 90 (L: 3.6 in.)
28. Plug 9 / 16 - 18 UNF
29. O - Ring, 6 - 1
30. Cover, Rear PTO Case
31. Fork Kit, MBR
32. Spring
33. Ball, 5 / 16
34. Shaft, MBR Change
35. Packing, P 12.5
36. Plate, Keep
37. Bolt, 8 x 20 (L: 0.8 in.)

3. Theory of Operation

3-1 Principle

Sc2400 transaxle consists of a Hydro Static transmission, differential, rear axle, Power Take Off (PTO) as well as the front drive shaft.

The power from the engine drives the input shaft of Hydro Static Transmission (HST) pump.

Hydro Static Transmission (HST) pump produces the hydraulic oil flow which is governed by changed swash plate angle with the forward and reverse drive pedal. This motor has two (2) speeds by changing the angle of the swash plate.

The governed hydraulic oil flow from the Hydro Static Transmission (HST) pump drives the Hydro Static Transmission (HST) motor. This motor has two (2) speeds by changing the angle of the swash plate.

The produced power from Hydro Static Transmission (HST) pump drives the rear axle shaft through the differential system.

This power also drives the front wheel drive shaft if the front wheel drive gear is engaged.

Mid- / rear - Power Take Off (PTO) is driven through the power from the engine directly. Those mid and rear Power Take Off (PTO) engaging are controlled by solenoid valve.

3-1-1 Construction and Operating Principle of the Hydro Static Transmission (HST)

The Hydro Static Transmission (HST) is essentially a non-stage transmission comprising a hydraulic pump and a hydraulic motor.

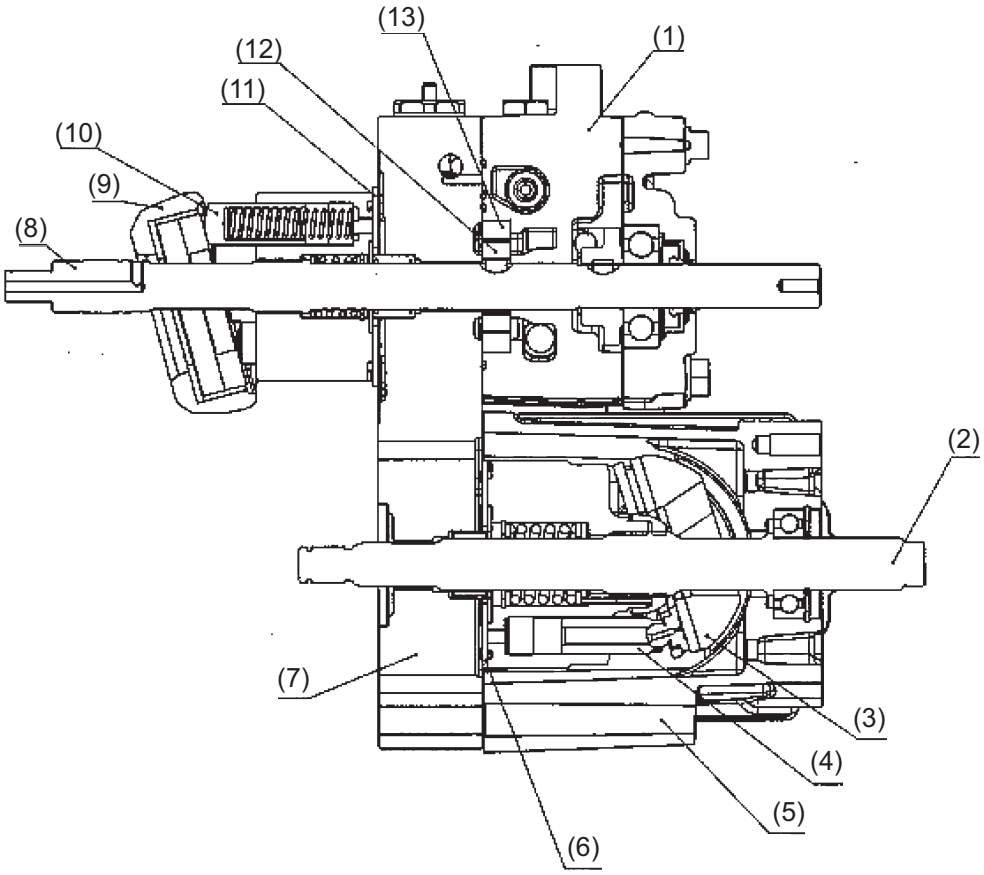

(1) Power pump body
(2) Output shaft
(3) Variable angle swash plate (for motor)
(4) Piston (for motor)
(5) Motor housing
(6) Valve plate (for motor)
(7) Center case
(8) Input shaft
(9) Variable angle swash plate (for pump)
(10) Piston (for pump)
(11) Valve plate (for pump)
(12) Inner rotor
(13) Outer rotor

(1) Construction and operating principle of the variable displacement pump

Fig. 1(a)

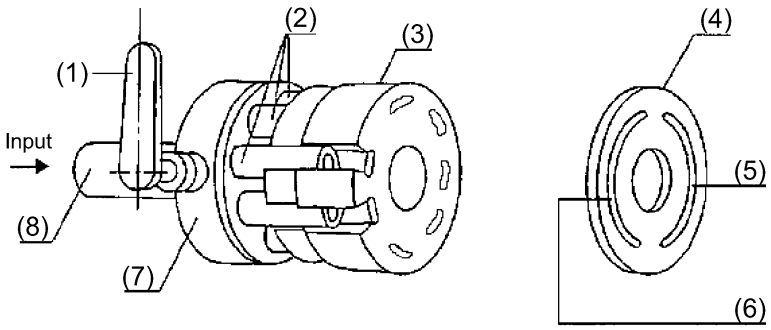

Fig. 1(b)

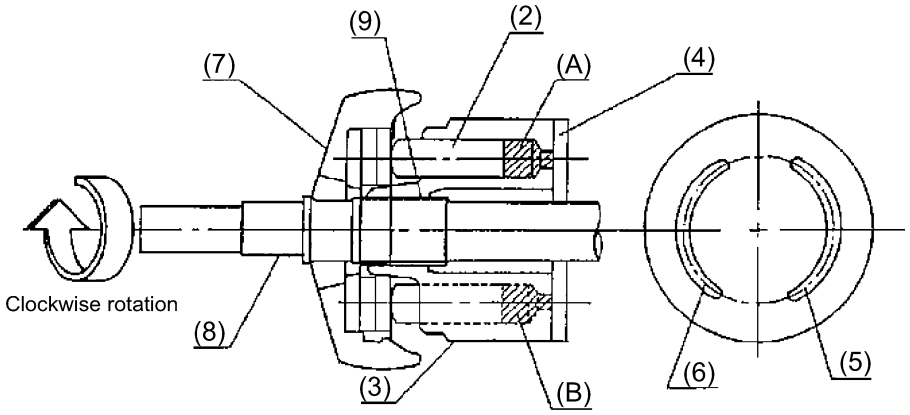

(1) Trunnion lever
(2) Piston (7 Pcs.)
(3) Cylinder block
(4) Valve plate
(5) Discharge port (Ps)
(6) Suction port (Pd)
(7) Swash plate
(8) Shaft
(9) Spline (19T)

1. The shaft connected to the drive is integrated with the cylinder block. Thus, the cylinder block rotates together with the shaft.
2. The cylinder block incorporates seven pistons.
3. The swash plate is fixed to the trunnion lever that is actuated with the shift lever, and its angle is varied by actuation of the shift lever.
4. When the swash plate is vertical relative to the shaft as in Fig. 1(b), the space occurring between the cylinder block and piston remains unchanged, thereby no suction or discharge occurs and no pumping action takes place.
   This state is called "neutral" or "standstill" state.
5. When the angle of the swash plate is varied, the capacity of space occurring between the cylinder block and piston accordingly varies, thereby pumping action takes place.
6. The hydraulic oil drawn into the pump is pressurized and delivered from the discharge port. This high-pressure oil is introduced into the suction port of the variable displacement motor, so that the energy produced by the variable displacement pump is converted to rotary motion by the variable displacement motor.

(2) Construction and operating principle of the variable displacement motor

Fig. 2(a)

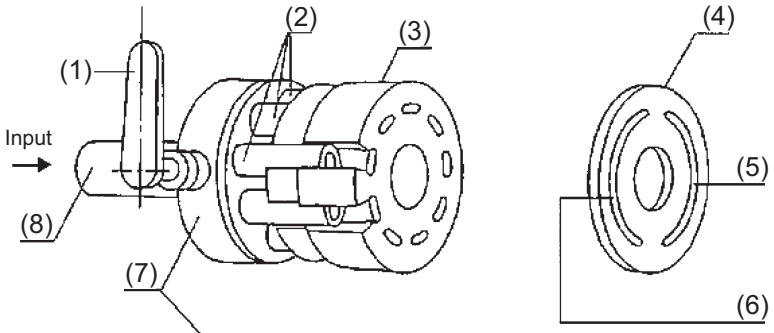

Fig. 2(b)

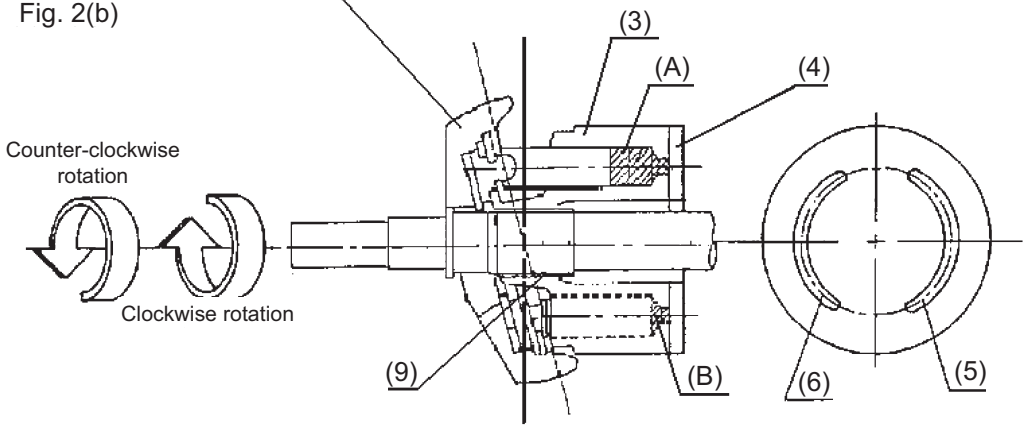

(1) Trunnion lever
(2) Piston (9 Pcs.)
(3) Cylinder block
(4) Valve plate
(5) Discharge port (Ps)
(6) Suction port (Pd)
(7) Swash plate
(8) Shaft
(9) Spline (18T)

1. A significant difference between the variable displacement pump and the variable displacement motor is that the pump sucks and discharges the hydraulic oil by its pumping action when its shaft is rotated by a driving gear while the shaft of the motor rotates by receiving oil pressure.
2. The cylinder block incorporates 9 pistons.
3. The swash plate is fixed to the trunnion lever that is operated by the sub-shift lever. Therefore, operating the shift lever changes a tilt angle of the swash plate.
4. The swash plate is tilted beforehand, as shown in Fig. 2(b). The swash plate is not used in its neutral position unlike that of the variable displacement pump.
   Therefore, there is always a difference in volume between the space (A), which is formed between the cylinder block and the top piston, and the space (B), which is formed between the cylinder block and the bottom piston.
5. When the high-pressure hydraulic oil is introduced into the suction port, the pistons are pushed so that component force in the rotational direction from the position (B) to the position (A) acts to rotate the cylinder block. Rotating the cylinder block generates torque that is exerted to the shaft through the splined section, resulting in rotation of the shaft.

(3) Operation of the Hydro Static Transmission (HST) (forward travel)

Fig. 3(a)(1)

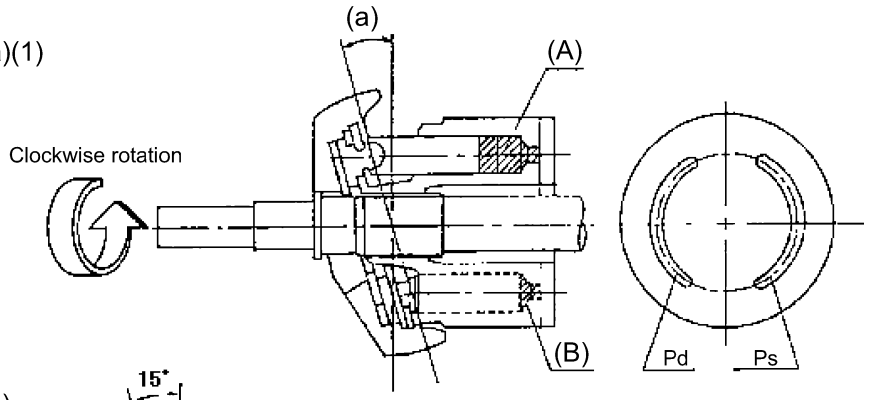

Fig. 3(b)

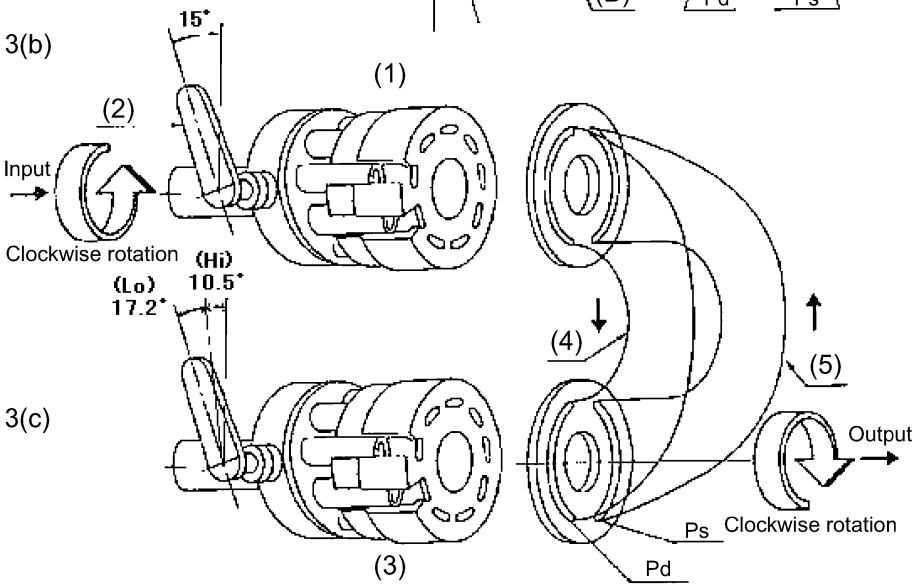

Fig. 3(c)

(1) Variable displacement pump (P)
(2) Trunnion lever
(3) Variable displacement motor (M)
(4) High pressure
(5) Low pressure

1. As is illustrated in Fig. 3(a), the swash plate on the variable displacement pump (P) is tilted by (a). As a result, a difference occurs in the capacity between (A) and (B) ((A)>(B)).
2. When with this state the shaft is rotated clockwise, discharge of high-pressure oil takes place while the pistons move across 180-degrees section from the position (A) to position (B); and suction of high-pressure oil takes place while the pistons move across 180-degrees section from the position (B) to position (A).
3. Fig. 3(b) illustrates, for the situation where the trunnion lever is in the forward position, the flow direction of the high-pressure oil, as well as the motions of the pump and the motor.
4. Fig. 3(c) illustrates that changing the tilt angle of the swash plate of the variable displacement motor with the trunnion lever increases or decreases the difference in volume between the spaces (A) and (B) in the variable displacement motor, similar to operation of the swash plate of the variable displacement pump shown in Fig. 3(a), and can switch between low-speed rotation (Lo-position) and high-speed rotation (Hi-position).

NOTE:

- Increasing the tilt angle of the swash plate of the variable displacement pump increases the oil flow rate discharged by the pump, resulting in an increase of travel speed.
- Increasing the tilt angle of the swash plate of the variable displacement motor increases oil quantity necessary for one rotation, resulting in a decrease of travel speed.

(4) Operation of the Hydro Static Transmission (HST) (backward travel)

Fig. 4(a)

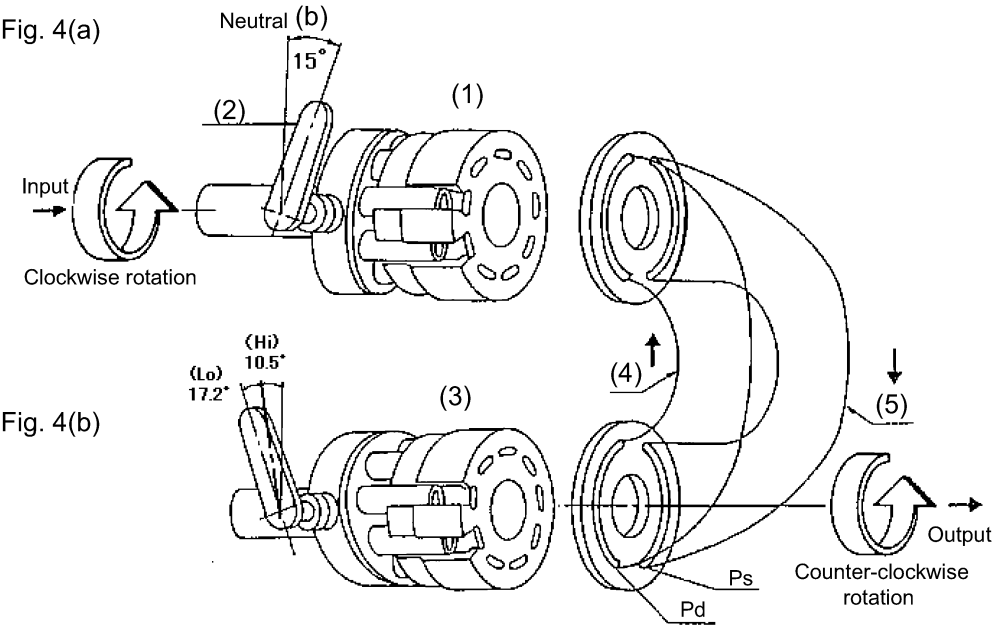

Fig. 4(b)

(1) Variable displacement pump (P)
(2) Trunnion lever
(3) Variable displacement motor (M)
(4) Low pressure
(5) High pressure

1. Contrary to the forward travel, tilting the trunnion lever of the variable displacement pump from its center position to the (b) side makes the volume of (A) larger than that of (B).
2. Then, if the shaft is turned clockwise, the operation of the associated components will be reverse to that of the forward travel; and, also, the hydraulic oil flows in the reverse direction.
3. Consequently, the variable displacement motor (M) runs counterclockwise to cause the machine to travel backward.

NOTE:

- A greater tilt on the swash plate in the variable displacement pump will lead to a greater oil flow rate, resulting in a greater travel speed.
- Increasing the tilt angle of the swash plate of the variable displacement motor increases oil quantity necessary for one rotation, resulting in a decrease of travel speed

3-1-2 Construction and Operating Principle of Each Valve on Hydro Static Transmission (HST)

As shown below, various valves are provided in the hydraulic circuit in order to control each function.
The construction and operating principle of each valve are described in this chapter.

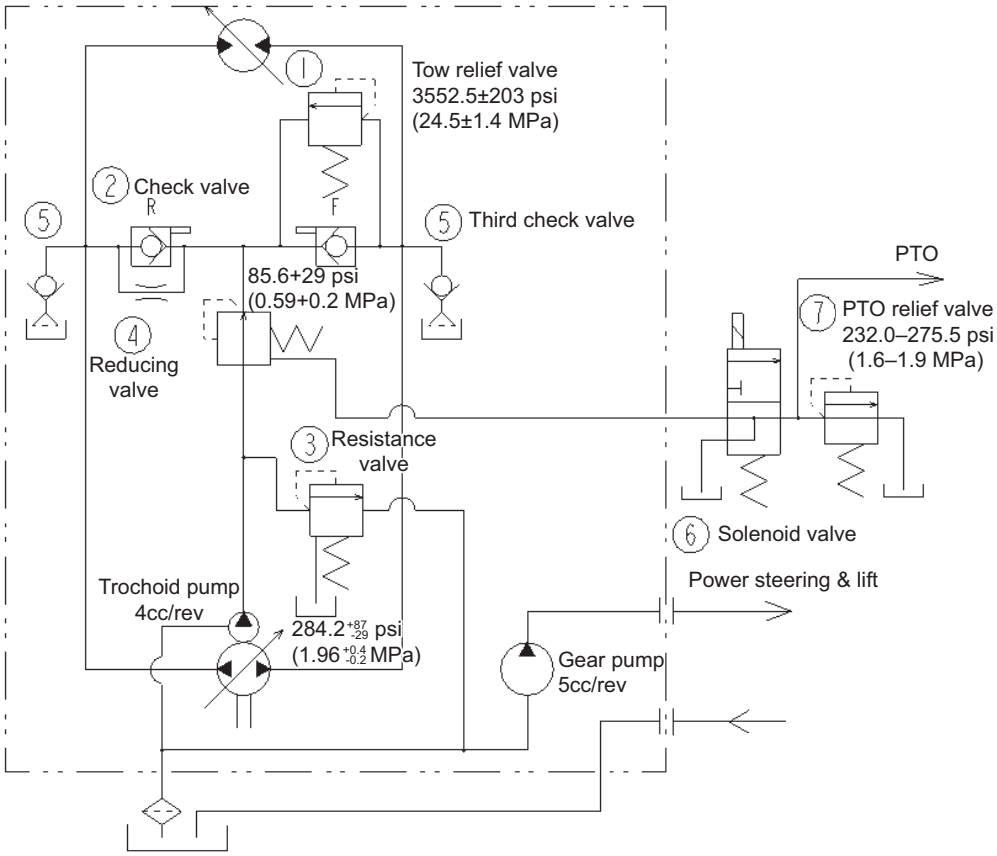

HYDRAULIC CIRCUIT

.

Location of each valve

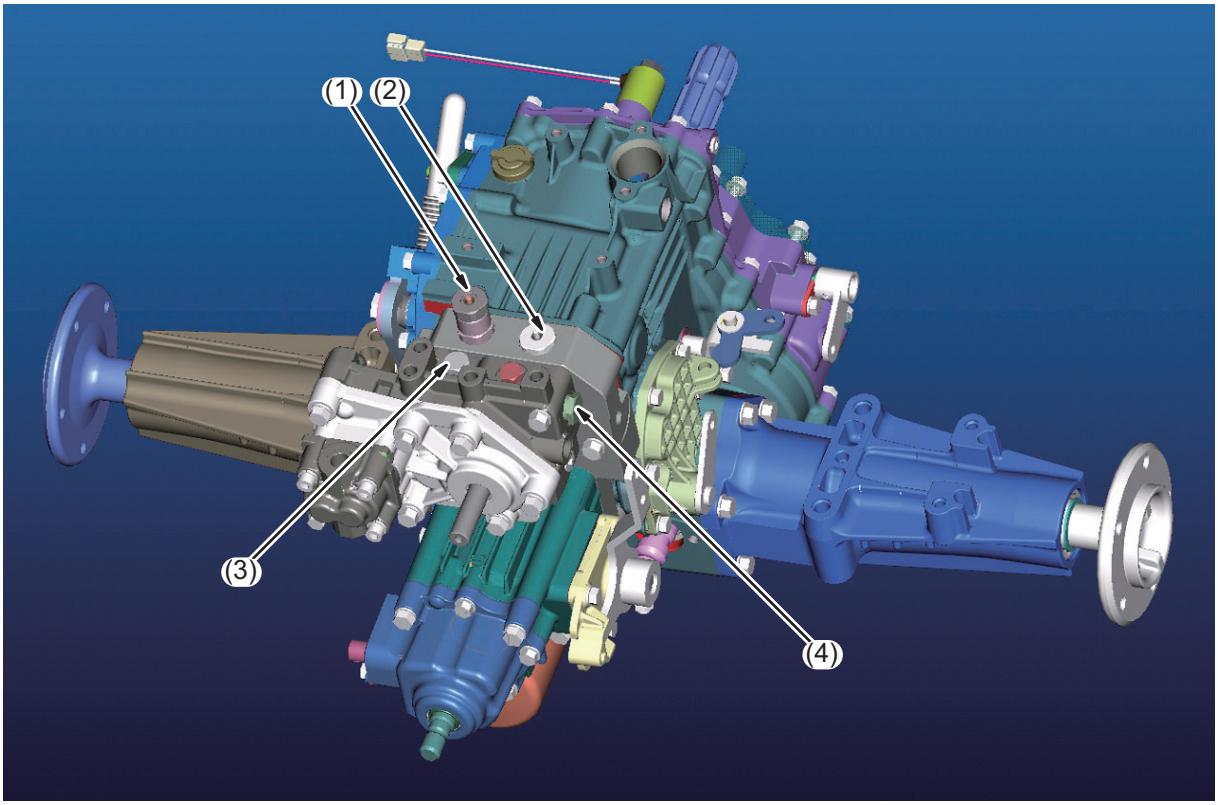

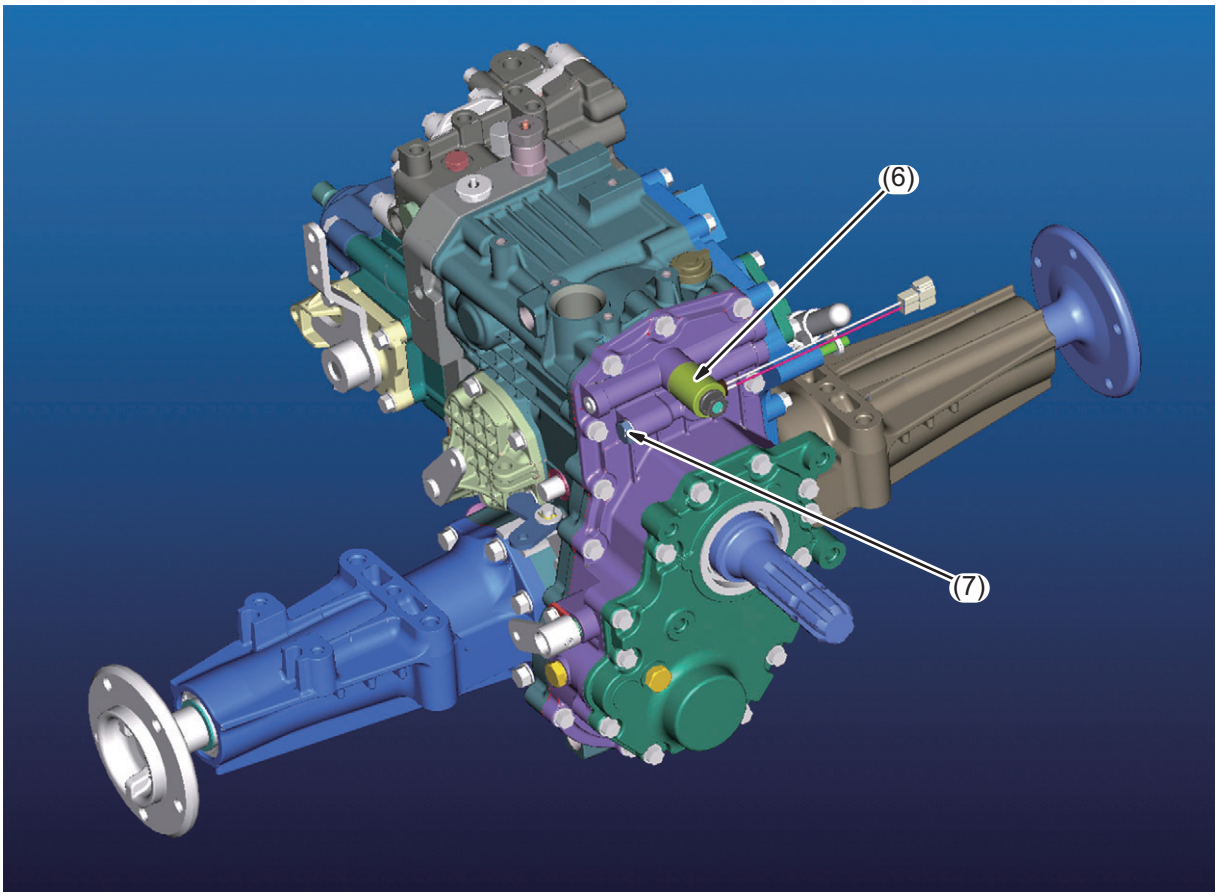

Location of each valve

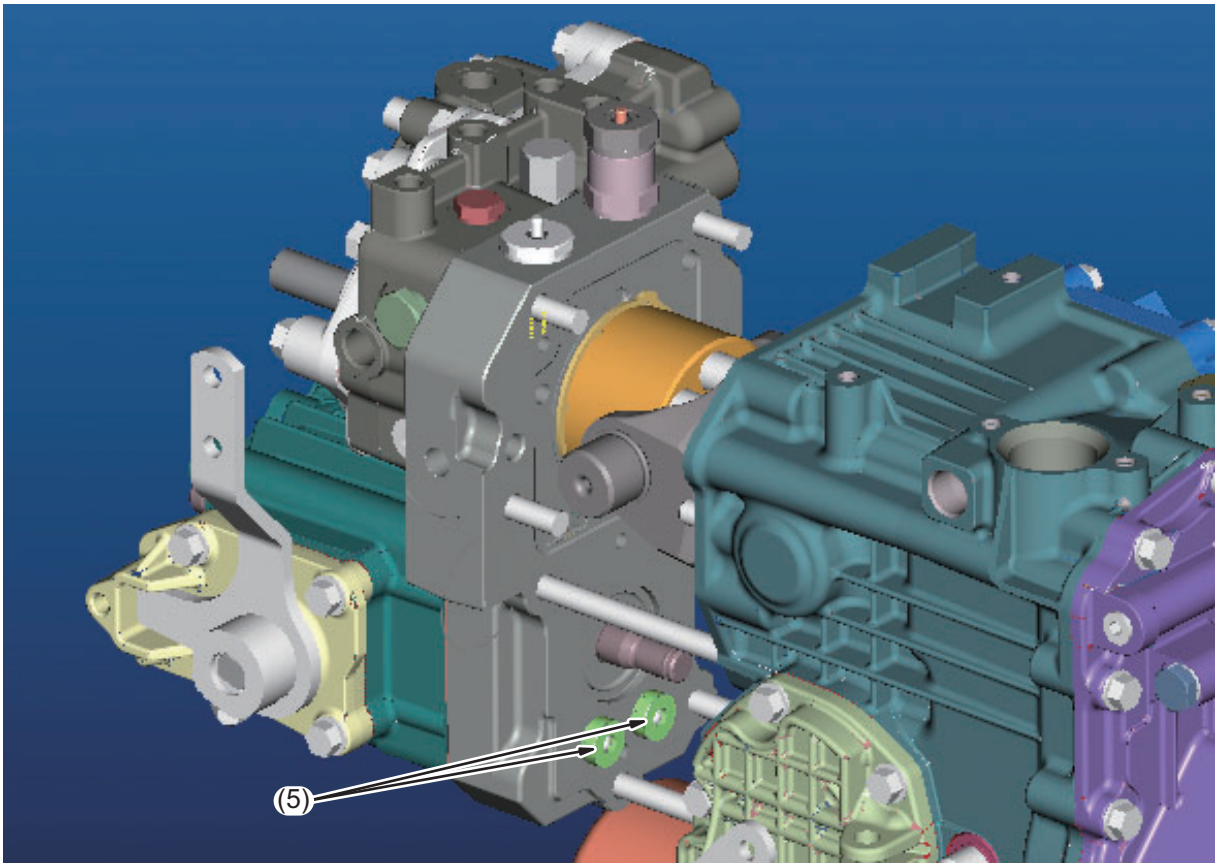

(1) Tow relief valve
(2) Check valve
(3) Resistance valve
(4) Reducing valve
(5) Third check valve
(6) Solenoid valve
(7) Power Take Off (PTO) relief valve

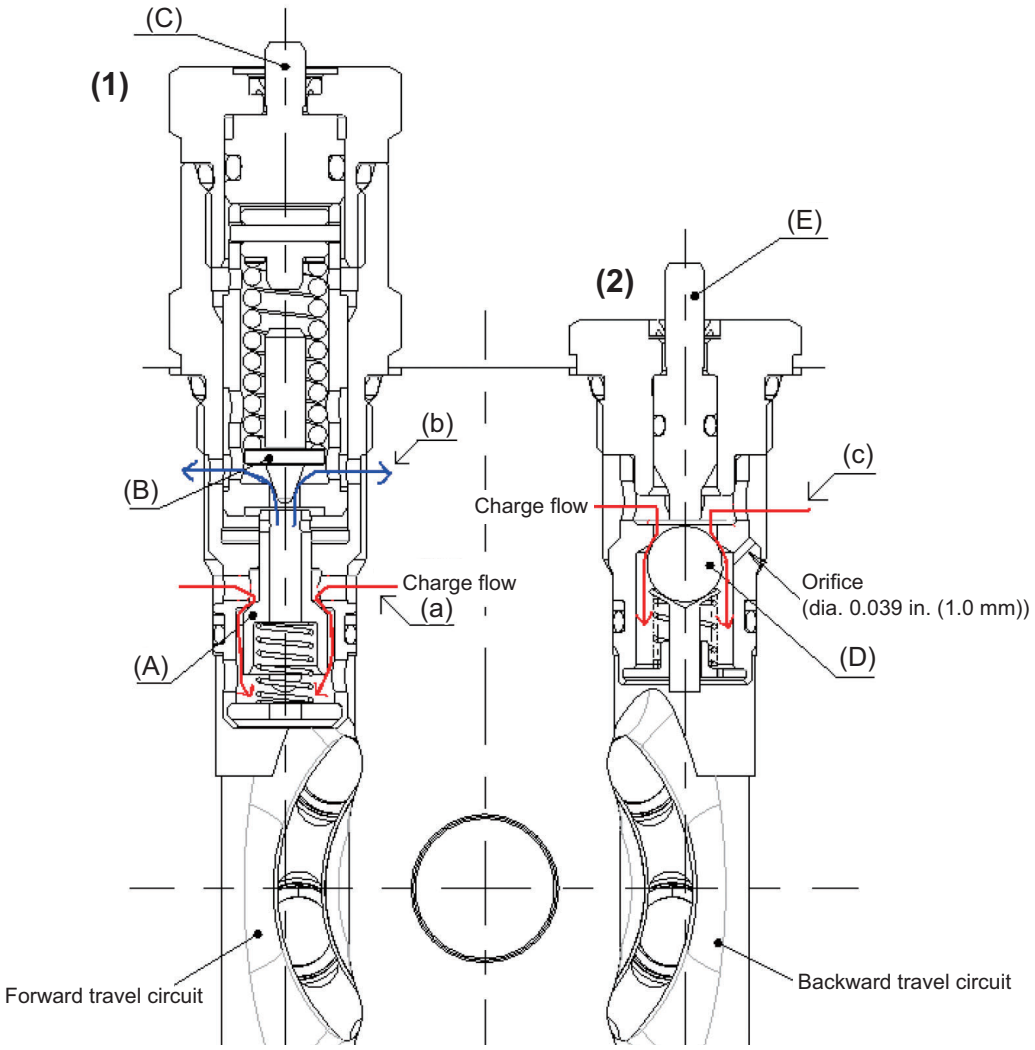

(1) Tow relief valve (1)

1. Check function
   A tow relief valve is installed in the forward travel circuit of the Hydro Static Transmission (HST). In a low pressure state, the charge flow pushes down the valve (A) to run in the forward travel circuit (see the passage (a) in the figure above). In a high pressure state, the hydraulic oil from the forward travel circuit is blocked by the valve (A).
2. Relief function
   When a pressure in the forward travel circuit reaches or exceeds its preset pressure (3552.5 psi (24.5 MPa)), the relief valve (B) lifts to release the pressure (see the passage (b) in the figure above). This prevents the pressure in the Hydro Static Transmission (HST) from exceeding the preset pressure to result in no damage to the Hydro Static Transmission (HST).

3. Bypass function
   Pushing the bushing pin (C) while the engine is not running, pushes down the valve (A) and the backward travel circuit is connected, so that the tractor can be moved by humans (see the passage (d) in the figure at right).

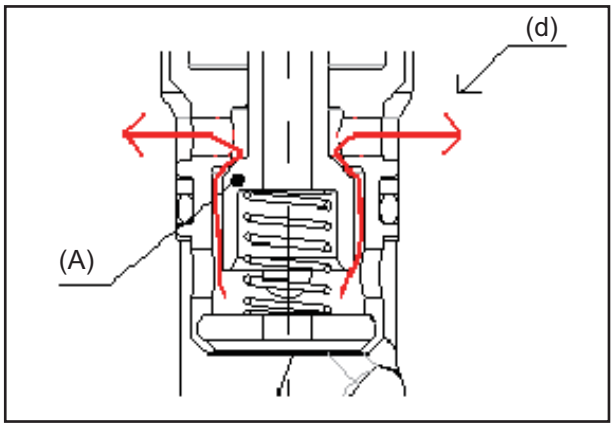

(2) Check valve (2)

1. Check function
   A check valve is installed in the backward travel circuit of the Hydro Static Transmission (HST). At a low pressure, the charge flow pushes down the steel ball (D) to run in the backward travel circuit (see the passage (c) in the figure above on the previous page). At a high pressure, the hydraulic oil from the backward travel circuit is blocked by the steel ball (D). The check valve is equipped with an orifice. Leaking the hydraulic oil from the orifice ensures a range of neutral position.

2. Bypass function
   Pushing the bushing pin (E) while the engine is not running, pushes down the steel ball (D) and connects the forward travel circuit and the backward travel circuit, so that the vehicle can be pushed by humans (see the passage (e) in the figure at right).

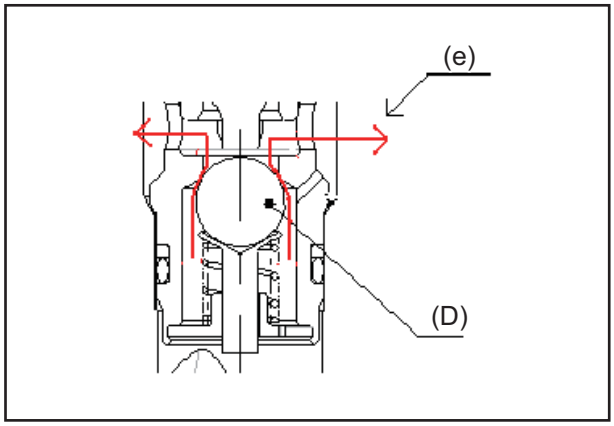

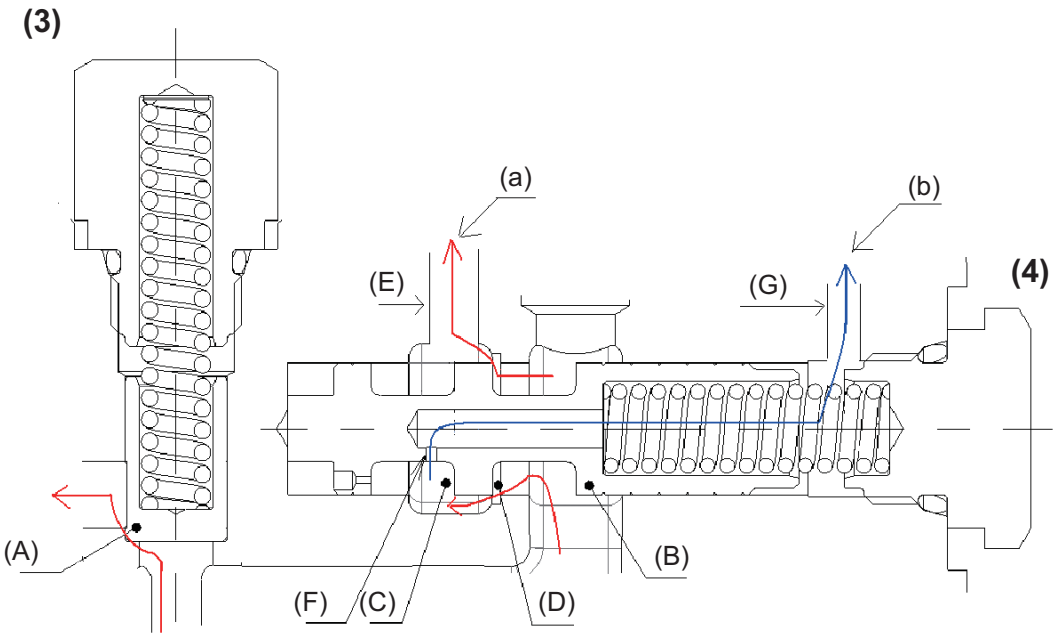

(3) Resistance valve (3)

The power pump is equipped with the resistance valve (A) in order to ensure the charge pressure and the PTO pressure. When the pressure in this valve reaches or exceeds its preset pressure (313.2-371.2 psi (2.16-2.56 MPa)), the valve lifts upward to feed the hydraulic oil, as shown in the figure above. (The hydraulic oil returns to the suction line of the power pump.) Therefore, the pressure in the passage in front of the resistance valve is always kept to the preset pressure (313.2-371.2 psi (2.16-2.56 MPa)).

(4) Reducing valve (4)

The power pump is equipped with a reducing valve (B). This valve balances the pressure in the chamber (C) and that in the chamber (D), and regulates those pressures to their preset pressure (85.6-114.6 psi (0.59-0.79 MPa)). Some parts of pressure-regulated hydraulic oil pass through the hole (E) and is used as the charge flow of the Hydro Static Transmission (HST) (see the passage (a) in the figure above). In addition, a fixed quantity of the hydraulic oil always flows in from the orifice (F) provided in the reducing valve and is used as hydraulic oil for the PTO clutch through the hole (G) (see the passage (b) in the figure above).

(5) Third check valve (5)

This valve is installed in each of the forward- and backward-travel circuits on the center case. Since a positive pressure is generated in the forward- and backward-travel circuits during normal driving/operation, the steel ball (A) is pressed against the seat to result in neither leakage nor suction of the hydraulic oil. When the engine is stopped at a slope, the hydraulic oil pushes down the steel ball (A), passes through the strainer and then flows in the circuit in order to prevent cavitation from occurring in the circuit.

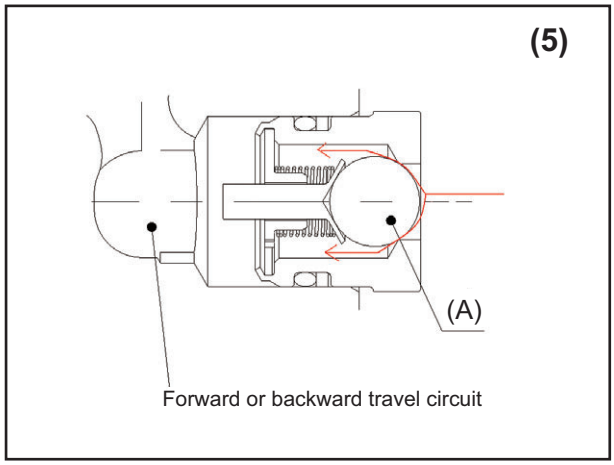

NOTE:

- This valve alone is not supplied as an independent part.

(6) Solenoid valve (6)

[in a solenoid OFF state]

The hydraulic oil flows as shown in the figure at right and its total amount is being drained into the transmission case.

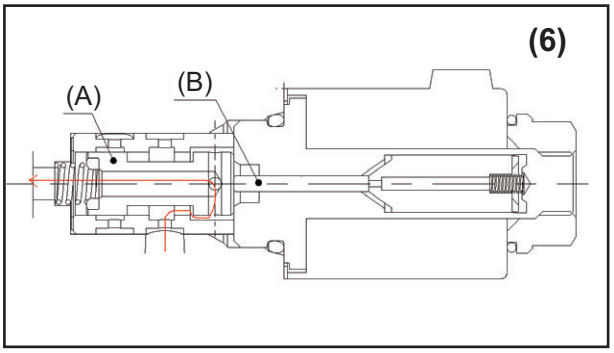

[in a solenoid ON state]

The bushing pin (B) pushes down the spool (A) and, as shown in the figure at right, the hydraulic oil passage is switched. The hydraulic oil is used as that for the PTO clutch.

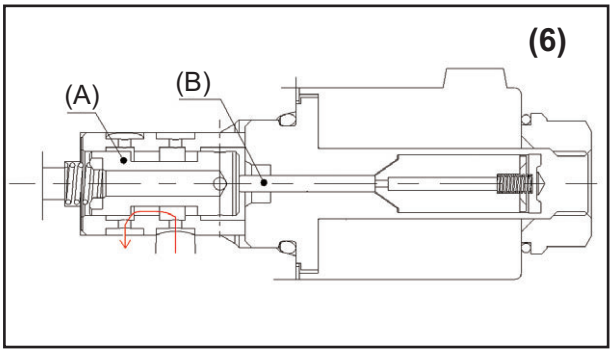

(7) PTO relief valve (7)

The PTO relief valve (A) is installed to the rear PTO case. When the pressure in this valve reaches its preset pressure (232.0-275.5 psi (1.6-1.9 MPa)), the valve lifts upward to drain the hydraulic oil into the transmission case through the drain hole (B). Therefore, this valve ensures the PTO pressure (232.0-275.5 psi (1.6-1.9 MPa)).

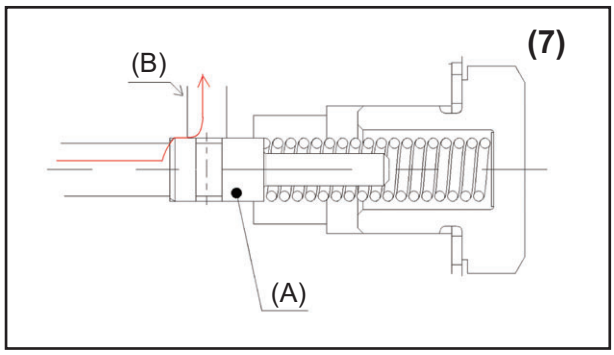

3-1-3 Transmission route of driving force

(1) Power schematic

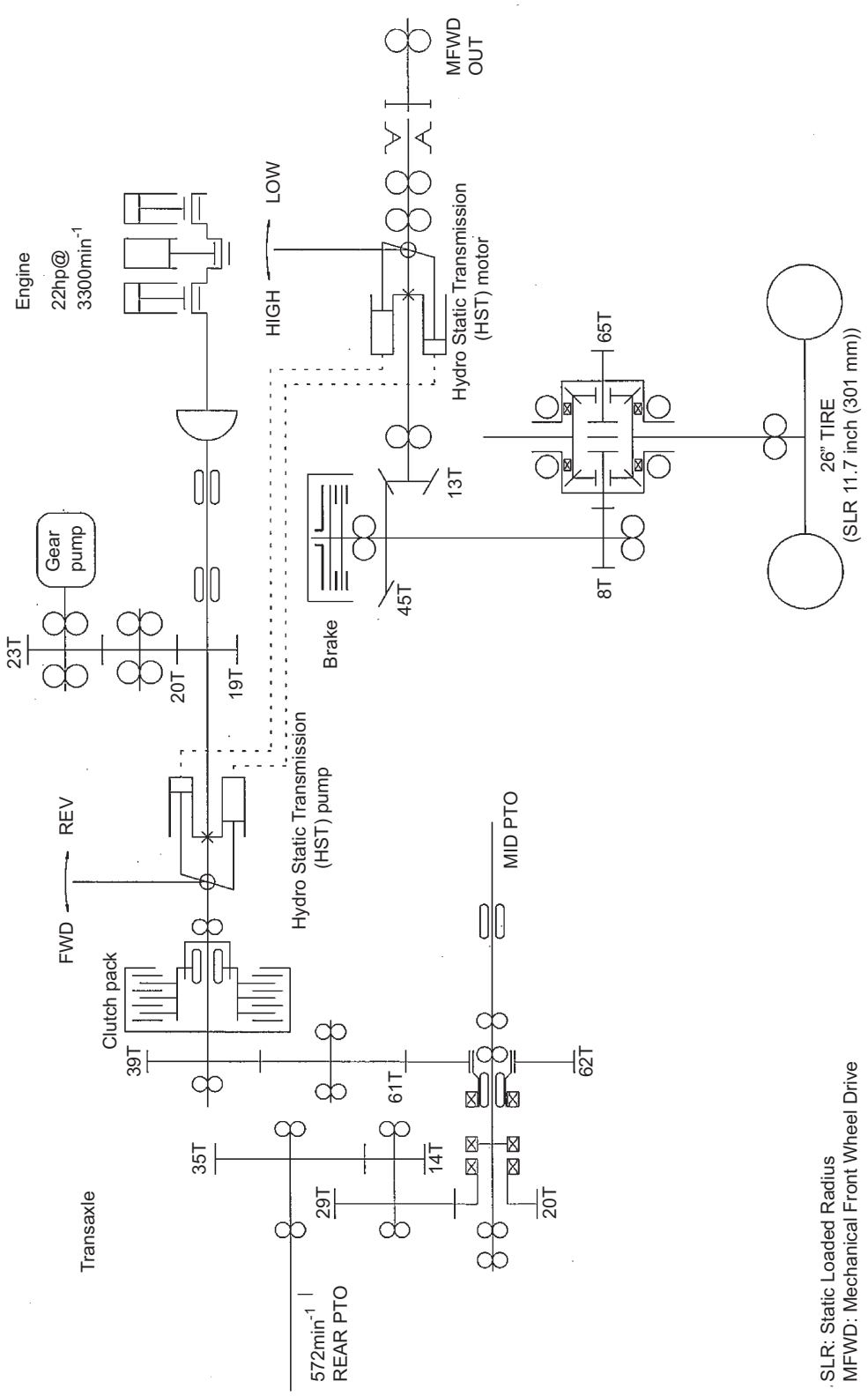

(2) Concept of power transmission

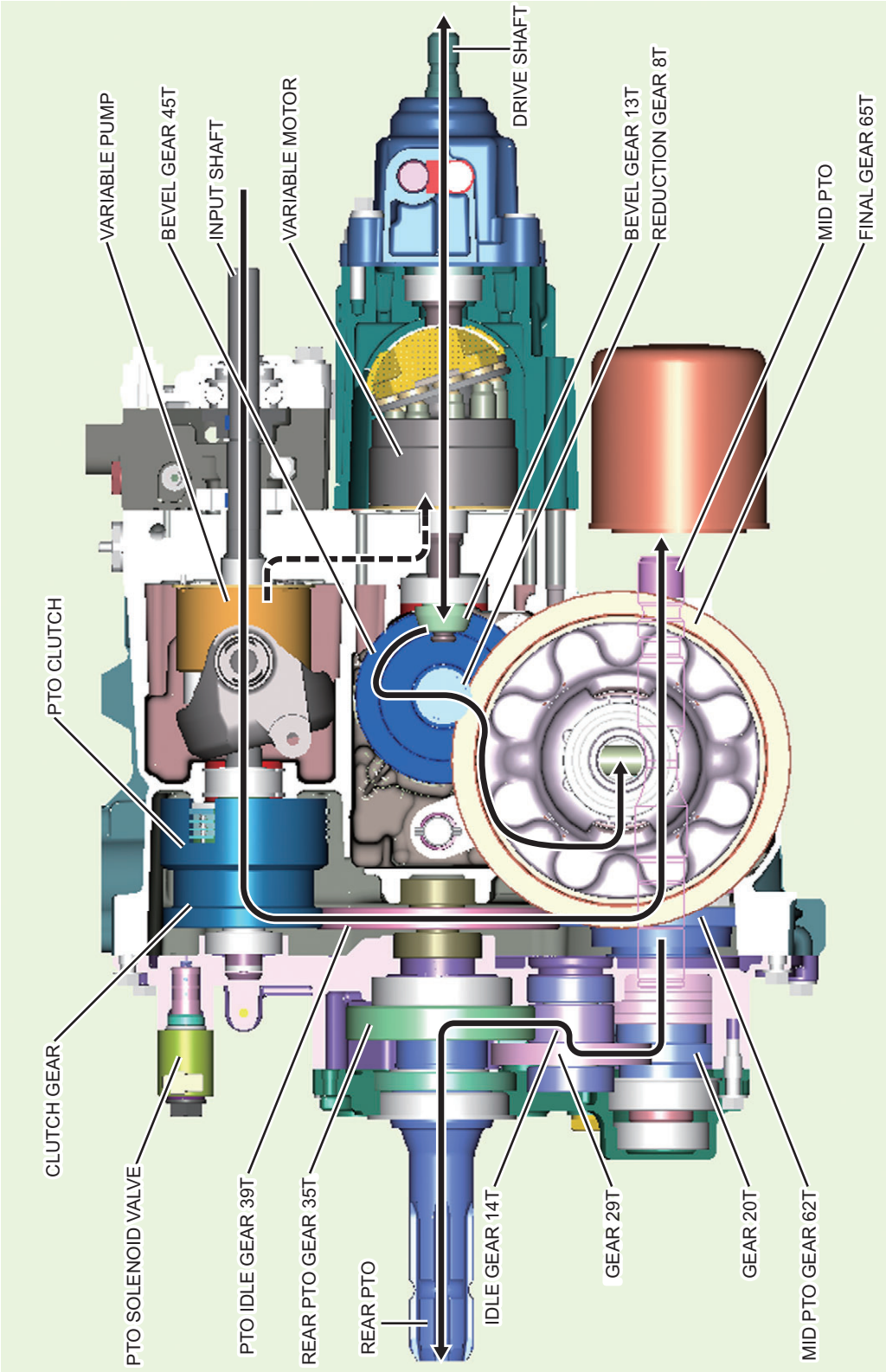

3-2 Releasing the Hydraulic Pressure in the Transaxle

*When the engine is not running!!

On the center plate, there is tow relief valve and check valve. On top of the tow relief valve and check valve, there are "By-pass push pins".

When those pins are pushed, the oil will be escaped to the transmission case through the charge circuit.

Those two pins are pushed by Hydro Static Transmission (HST) pressure plate.

3-3 Gear Pump

There are two kinds of pump.

One that is attached with the transaxle is trochoid pump as the charge pump for Hydro Static Transmission (HST) unit.

The other is the gear pump which supplies the hydraulic pressured oil for the power steering, lift valve and loader valve.

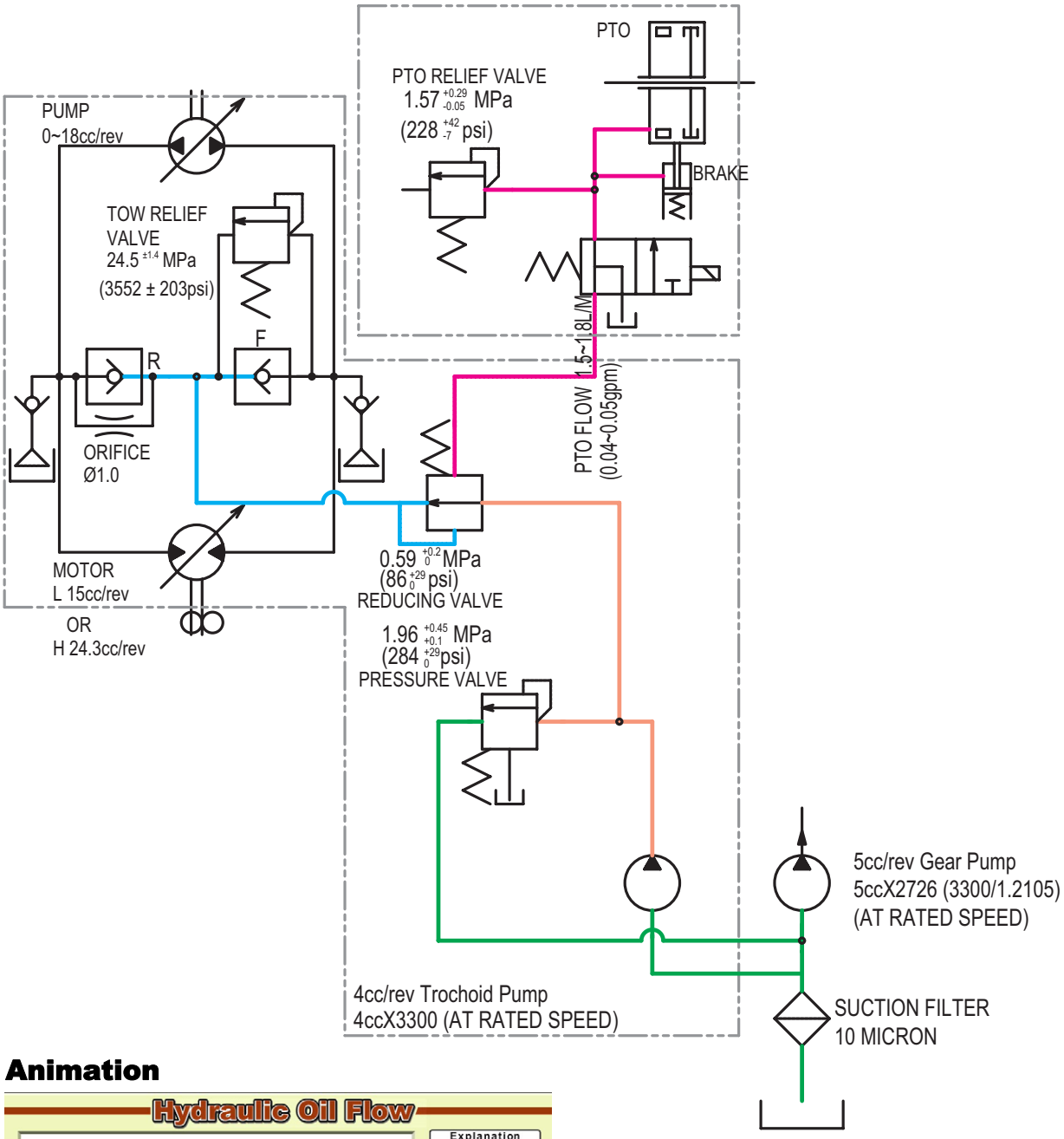
PTO
PTO RELIEF VALVE
1.57 +0.29 -0.05 MPa
(228 +42 -7 psi)
BRAKE
PUMP
0~18cc/rev
TOW RELIEF
VALVE
24.5 ±1.4 MPa
(3552 ± 203psi)
F
R
ORIFICE
Ø1.0
PTO FLOW 1.5~18L/M
(0.04~0.05gpm)
MOTOR
L 15cc/rev
OR
H 24.3cc/rev
0.59 +0.2 0 MPa
(86 +29 0 psi)
REDUCING VALVE
1.96 +0.45 +0.1 MPa
(284 +29 0 psi)
PRESSURE VALVE
5cc/rev Gear Pump
5ccX2726 (3300/1.2105)
(AT RATED SPEED)
4cc/rev Trochoid Pump
4ccX3300 (AT RATED SPEED)
SUCTION FILTER
10 MICRON

Animation

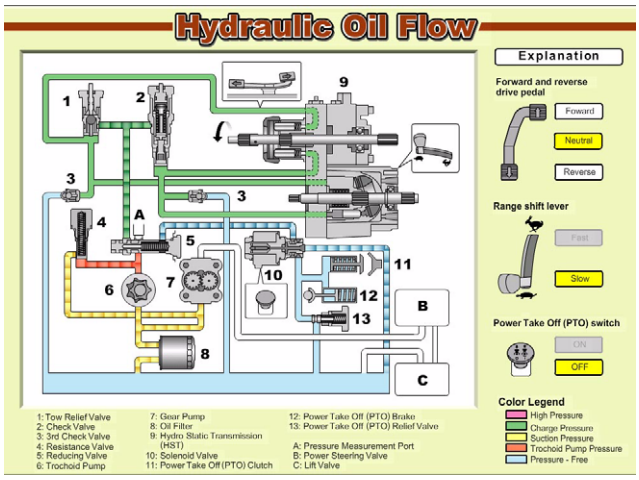
Hydraulic Oil Flow
Explanation
Forward and reverse drive pedal
Foward
Neutral
Reverse
Range shift lever
Fast
Slow
Power Take Off (PTO) switch
ON
OFF
Color Legend
High Pressure
Charge Pressure
Suction Pressure
Trochoid Pump Pressure
Pressure - Free
1: Tow Relief Valve
2: Check Valve
3: 3rd Check Valve
4: Resistance Valve
5: Reducing Valve
6: Trochoid Pump
7: Gear Pump
8: Oil Filter
9: Hydro Static Transmission (HST)
10: Solenoid Valve
11: Power Take Off (PTO) Clutch
12: Power Take Off (PTO) Brake
13: Power Take Off (PTO) Relief Valve
A: Pressure Measurement Port
B: Power Steering Valve
C: Lift Valve


Charge Pressure Oil
Clutch Engagement Pressure Oil
Lube Pressure Oil
Pressure Free Oil

4. Diagnostics

4-1 Transmission Problems & Symptoms

(1) Problems with machine motion

(A)
The machine moves on its own power.

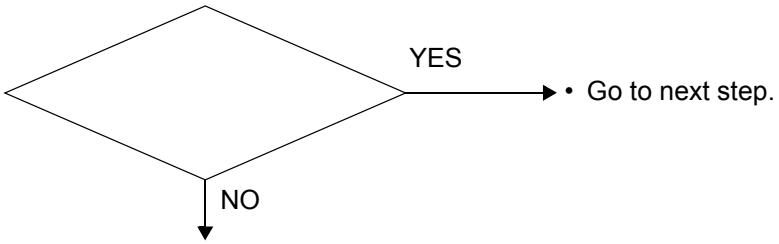

●Check
- The Hydro Static Transmission (HST) pressure release lever is pushed fully or partially.
- The brakes have been applied or they are not releasing.
- The Hydro Static Transmission (HST) control pedal linkage is bent, binding, or disconnected.
- The filter is plugged or an air leak exists on the vacuum side. Check the filter, charge pump, and case seal.
- The charge pressure relief valve is leaking. The seat valve or spring is damaged.
- The Hydro Static Transmission (HST) directional control valves are leaking or jammed down.
- The Hydro Static Transmission (HST) anti-cavitation valves are leaking or jammed open.
- The charge pump is scored or worn. The pump or motor valve plates are scored or worn.
- The driveshaft is not turning the pump input shaft, or the charge pump key is sheared.

(B)
The machine does not move; cannot be pushed; or wheels are locked up.

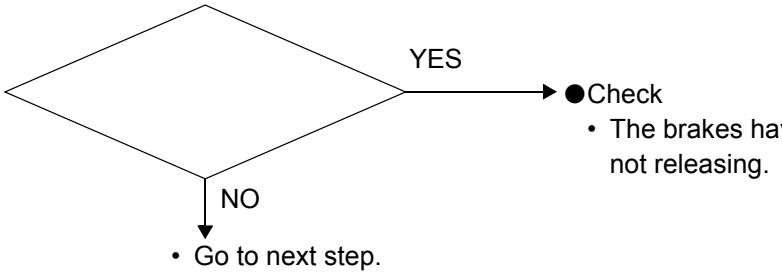

●Check
- The brakes have been applied or they are not releasing.

- Go to next step.

(C)

The machine moves only in one direction.

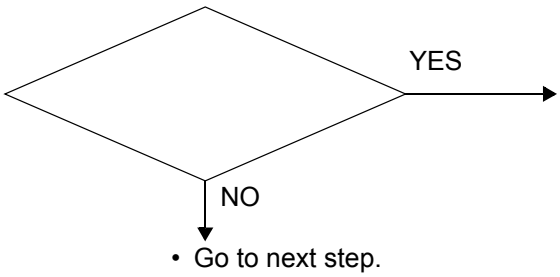

●Check

- The Hydro Static Transmission (HST) pressure release lever is pushed fully or partially.
- The Hydro Static Transmission (HST) control pedal linkage is bent, binding, or disconnected.
- The Hydro Static Transmission (HST) directional control valves are leaking or jammed down.
- The Hydro Static Transmission (HST) directional control valve is in the wrong location.
- The Hydro Static Transmission (HST) anti-cavitation valves are leaking or jammed open.
- The pump or motor valve plates are scored or worn.

(D)

The machine travels too fast in reverse.

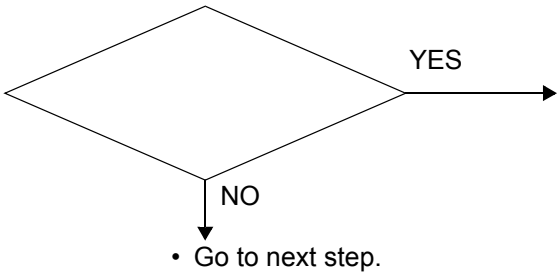

●Check

- The Hydro Static Transmission (HST) pressure release lever is pushed fully or partially.
- The linkage damper (shock absorber) has malfunctioned.
- The Hydro Static Transmission (HST) directional control valves are leaking or jammed down.
- The pump or motor valve plates are scored or worn.

(E)

Forward travel under load is slow, or speed drops when load is applied.

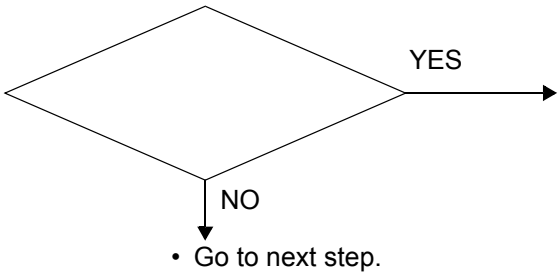

●Check

- Forward pedal height needs adjustment.
- The Hydro Static Transmission (HST) pressure release lever is pushed fully or partially.
- Engine performance is poor or engine is not operating at, or set for, correct operating speeds.
- The filter is plugged or an air leak exists on the vacuum side. Check the filter, charge pump, and case seal.
- The Hydro Static Transmission (HST) control pedal linkage is bent, binding, or disconnected.
- The Hydro Static Transmission (HST) directional control valves are leaking or jammed down.
- The Hydro Static Transmission (HST) anti-cavitation valves are leaking or jammed open.
- The driveshaft is not turning the pump input shaft, or the charge pump key is sheared.
- The Hydro Static Transmission (HST) directional control valve is in the wrong position.
- The charge pump is scored or worn. The pump or motor valve plates are scored or worn.

(F)

The machine's speed is erratic.

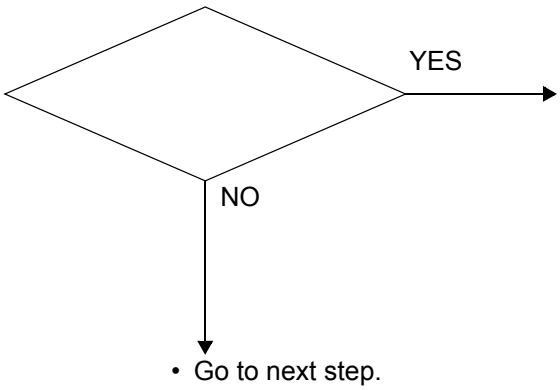

●Check

- The Hydro Static Transmission (HST) pressure release lever is pushed fully or partially.
- The linkage damper (shock absorber) has failed.
- Engine performance is poor or engine is not operating at, or set for, correct operating speeds.
- The brakes have been applied or they are not releasing.
- The filter is plugged or an air leak exists on the vacuum side. Check the filter, charge pump, and case seal.
- The Hydro Static Transmission (HST) control pedal linkage is bent, binding, or disconnected.
- The Hydro Static Transmission (HST) directional control valves are leaking or jammed down.
- The Hydro Static Transmission (HST) anti-cavitation valves are leaking or jammed open.
- The driveshaft is not turning the pump input shaft, or the charge pump key is sheared.
- The charge pump is scored or worn. The pump or motor valve plates are scored or worn.
- The charge pressure relief valve is leaking. The seat valve or spring is damaged.
- The swash plate control shaft or bushing is worn.

(G)

The machine will not slow down or stop.

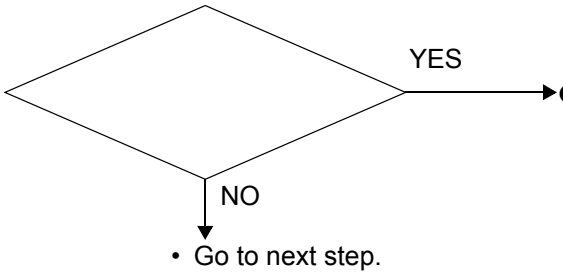

●Check

- The Hydro Static Transmission (HST) pressure release lever is pushed fully or partially.
- The Hydro Static Transmission (HST) control pedal linkage is bent, binding, or disconnected.
- The neutral adjustment is incorrect.
- The Hydro Static Transmission (HST) anti-cavitation valves are leaking or jammed open.
- The swash plate control shaft or bushing is worn.

(2) Transmission problems

(A)

Power Take Off (PTO) problem or complaint?

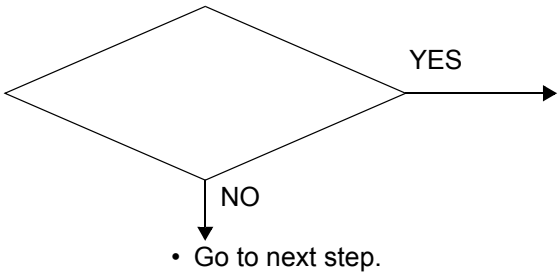

- Check
  - For problems or complaints with the Mid or Rear-Power Take Off (PTO), see Chapter 5. POWER TRAIN.
- Go to next step.

(B)

Transaxle or differential lock problem or complaint?

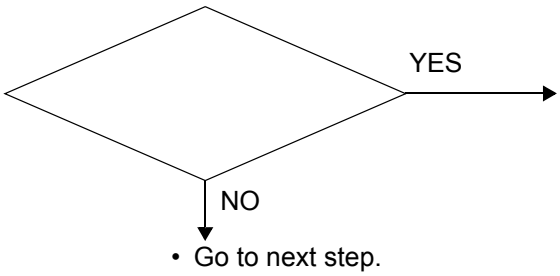

- See Chapter 5. POWER TRAIN.
- Go to next step.

(C)

Transmission running hot?

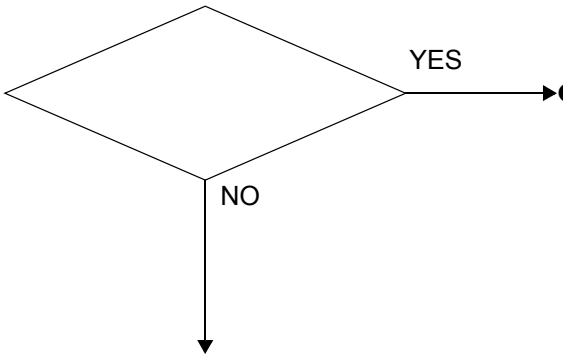

- Check
  - The oil cooler might be plugged with debris.
  - The Hydro Static Transmission (HST) pressure release lever is pushed fully or partially.
  - The Hydro Static Transmission (HST) control pedal linkage is bent, binding, or disconnected.
  - The brakes have been applied or they are not releasing.
  - The neutral adjustment is incorrect.
  - The Hydro Static Transmission (HST) directional control valves are leaking or jammed down.
  - The Hydro Static Transmission (HST) anti-cavitation valves are leaking or jammed open.
  - The charge pump is scored or worn. The pump or motor valve plates are scored or worn.
- Go to next step.

(D)

Hydraulic noise?

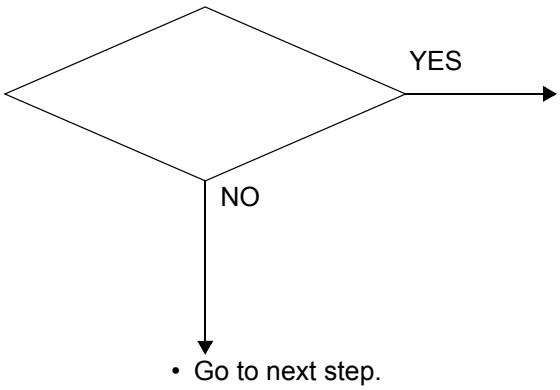

●Check

- The Hydro Static Transmission (HST) pressure release lever is pushed fully or partially.
- The brakes have been applied or they are not releasing.
- The neutral adjustment is incorrect.
- The filter is plugged or an air leak exists on the vacuum side. Check the filter, charge pump, and case seal.
- The swash plate control shaft or bushing is worn.
- The driveshaft is not turning the pump input shaft, or the charge pump key is sheared.
- The Hydro Static Transmission (HST) directional control valves are leaking or jammed down.
- The Hydro Static Transmission (HST) anti-cavitation valves are leaking or jammed open.
- The charge pump is scored or worn. The pump or motor valve plates are scored or worn.

(E)

Gear noise occurs that varies with speed, direction of travel, and turns.

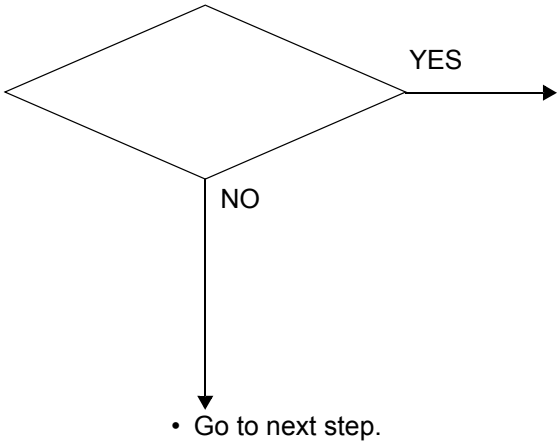

●Check

- The brakes have been applied or they are not releasing.
- The filter is plugged or an air leak exists on the vacuum side. Check the filter, charge pump, and case seal.
- The driveshaft is not turning the pump input shaft, or the charge pump key is sheared.
- The charge pump is scored or worn. The pump or motor valve plates are scored or worn.

4-2 Problems & Symptoms with the Power Take Off (PTO)

(1) Problems or complaints with the Power Take Off (PTO)

(A)
Does the Power Take Off (PTO) engage?

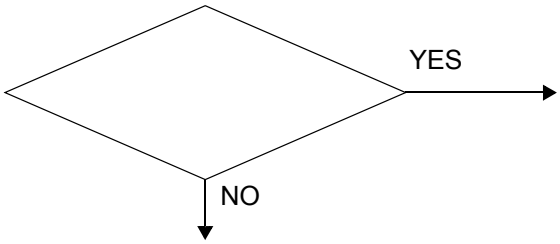

- Go to next step.

●Check

- Check the engagement solenoid circuit.
- The Power Take Off (PTO) switch is not working.
- The orifice of the Power Take Off (PTO) lube reduction valve is plugged.
- The engagement valve is installed incorrectly.
- The Power Take Off (PTO) pressure control valve is faulty.
- The Power Take Off (PTO) clutch piston is leaking, the input shaft seal is leaking, or the clutch disc is worn.
- The charge pump is providing insufficient output.
- The Power Take Off (PTO) shaft, gear, or bearing has failed.

(B)
Engine stalls when Power Take Off (PTO) is engaged.

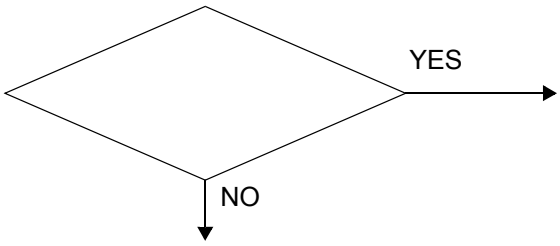

●Check

- Power Take Off (PTO) is under excessive load. Reduce load.
- Increase engine rpm. Check engine performance.
- Hydraulic circuit is overloaded. Remove restriction or load.
- The Power Take Off (PTO) brake is not releasing. Check the brake piston and O-rings.
- The Power Take Off (PTO) shaft, gear, or bearing has failed.

- Go to next step.

(C)
Power Take Off (PTO) will not stay engaged.

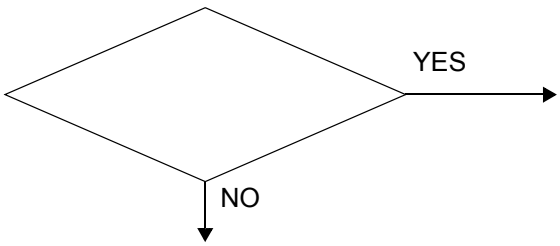

●Check

- Check the circuit of the engagement solenoid.
- The engagement valve is installed incorrectly.
- The Power Take Off (PTO) clutch piston is leaking, the input shaft seal is leaking, or the clutch disc is worn.
- The orifice of the the Power Take Off (PTO) lube reduction valve is plugged.
- The charge pump is providing insufficient output.
- The Power Take Off (PTO) pressure control valve is faulty.

- Go to next step.

(D)

Gear or bearing noise with the Power Take Off (PTO) engaged.

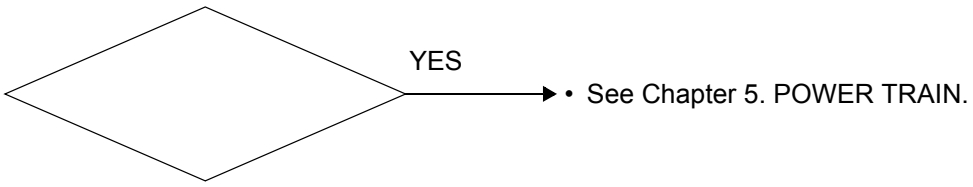

(E)

Power Take Off (PTO) shaft turns slowly.

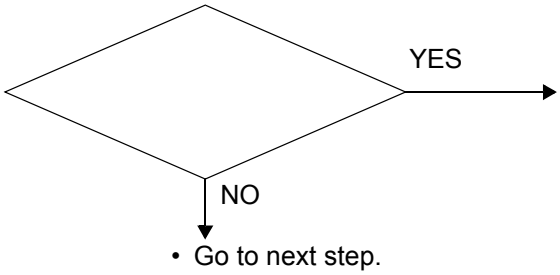

●Check

- Power Take Off (PTO) is under excessive load. Reduce load.
- Increase engine rpm. Check engine performance.
- The orifice of the Power Take Off (PTO) lube reduction valve is plugged.
- The charge pump is providing insufficient output.
- The Power Take Off (PTO) pressure control valve is faulty.
- The Power Take Off (PTO) clutch piston is leaking, the input shaft seal is leaking, or the clutch disc is worn.

(F)

Power Take Off (PTO) shaft stops slowly or not at all.

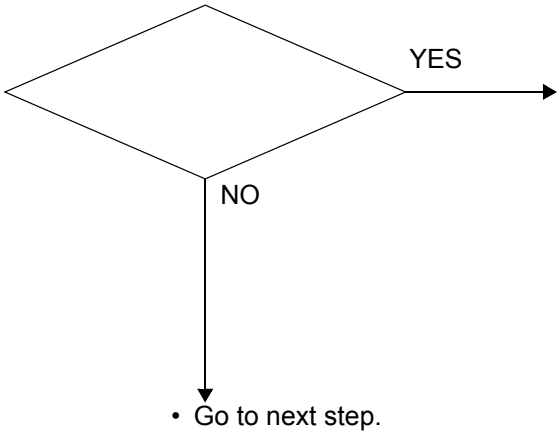

●Check

- Check the circuit of the engagement solenoid.
- The engagement valve is installed incorrectly.
- The Power Take Off (PTO) brake is not releasing. Check the brake piston and O-rings.
- Power Take Off (PTO) is under excessive load. Reduce load.
- Power Take Off (PTO) brake springs are faulty.

4-3 Problems & Symptoms with Transaxle Differential

(1) Differential

(A)
Rear drive wheels are locked up.

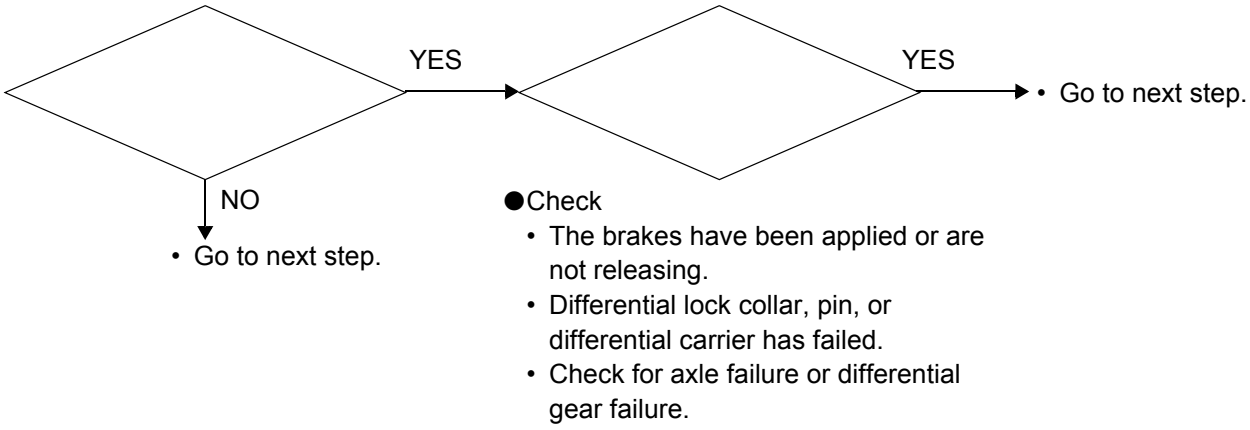

(B)
Rear wheel freewheel: no transaxle drive and/or hydraulic control valve pins are up.

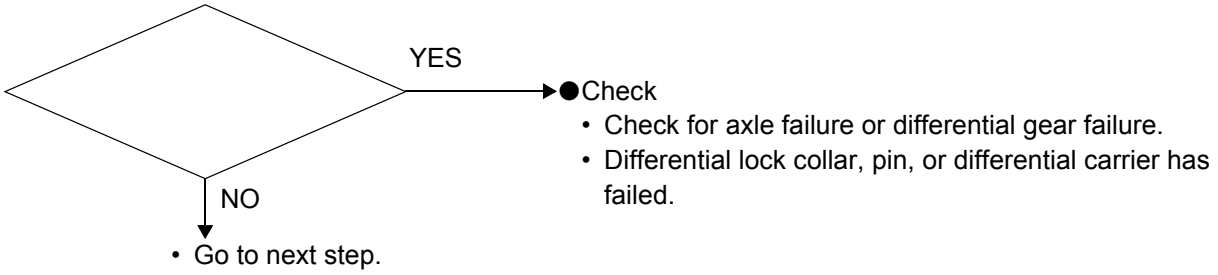

(C)
Differential lock does not engage.

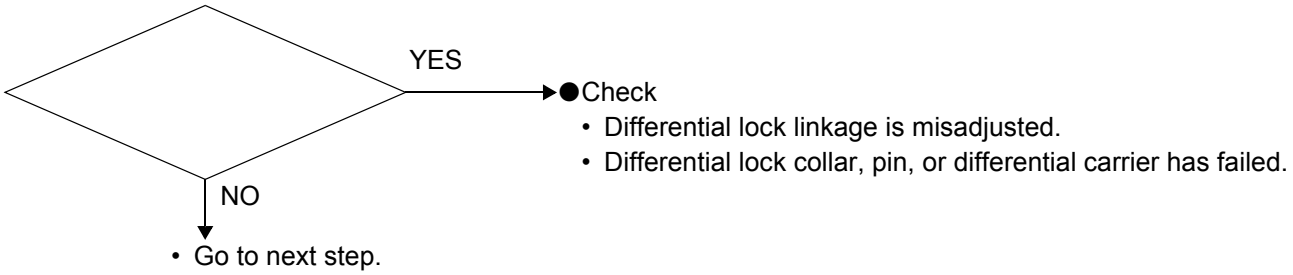

(D)

Differential lock will not disengage, or ratcheting noise occurs as machine moves or turns.

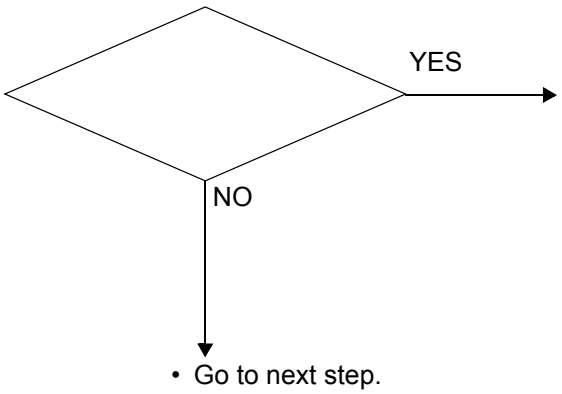

- ●Check
  - The brakes have been applied or are not releasing.
  - Differential lock linkage is misadjusted.
  - Differential is engaged. Check adjustment. If properly adjusted, repair differential lock.
  - Differential lock collar, pin, or differential carrier has failed.

- Go to next step.

4-4 Hydro Static Transmission (HST) Test (Condition: Engine stopped)

Test Preparation

- Disengage parking brake.
- Turn off engine.
- Position machine on a hard, level surface.

(1) Hydro Static Transmission (HST)

(A)

- **Check of transmission dipstick shows correct oil type, viscosity, and level.**
- **Transaxle is free from oil leaks.**

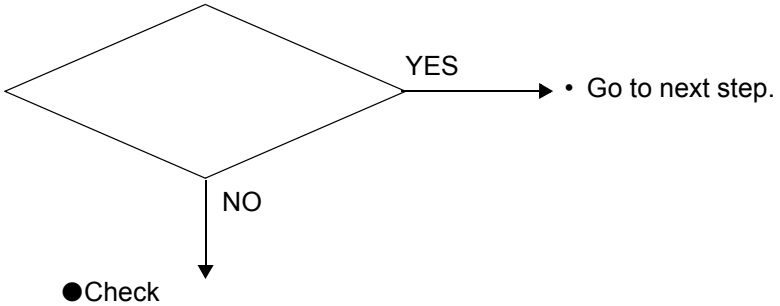

- Check
  - Add or change hydraulic oil. Repair all external leaks.

(B)

Are oil cooler, radiator intake screen, and cooler fins clean and free of debris? Are fins straight?

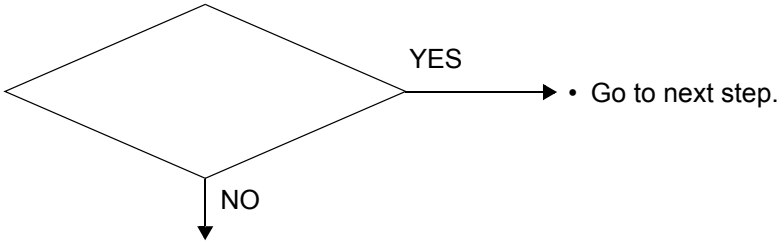

- Check
  - Clean as required.

(C)

Do hydraulic control levers return to neutral position?

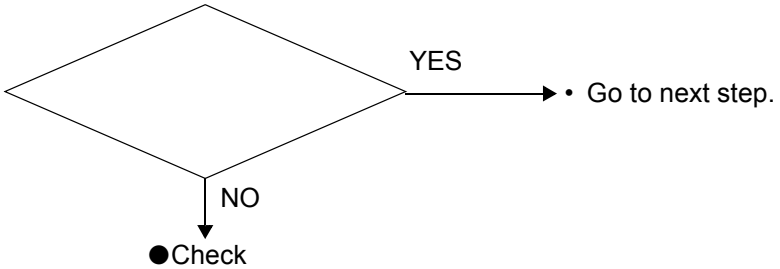

- Check
  - Hydraulic control lever is not in neutral; hydraulic system could be overloaded.

(D)

With the Hydro Static Transmission (HST) pressure release lever engaged (in DOWN position), does machine freewheel in both directions?

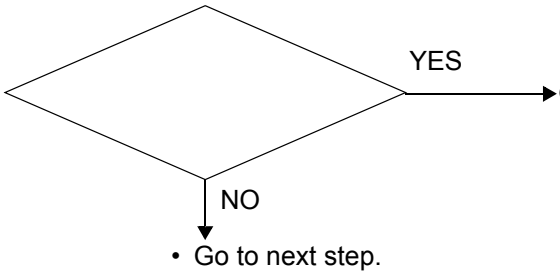

●Check
- The Hydro Static Transmission (HST) pressure release lever is not releasing the pins of the directional control valve.
- Hydro Static Transmission (HST) directional control pins are jammed down.

(E)

With the Hydro Static Transmission (HST) pressure release lever engaged (in DOWN position), does machine move in reverse but not forward?

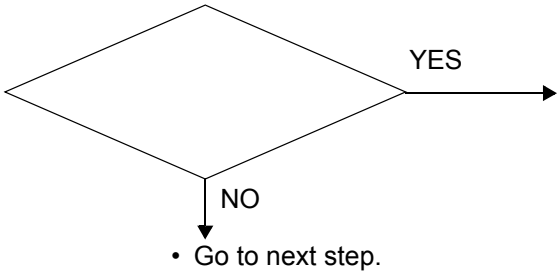

●Check
- Hydro Static Transmission (HST) directional control valves are installed in the wrong ports. Reverse the valves.
- The tow relief valve is leaking. Replace the tow relief valve.

(F)

With the Hydro Static Transmission (HST) pressure release lever engaged (in DOWN position), does machine freewheel with brakes applied?

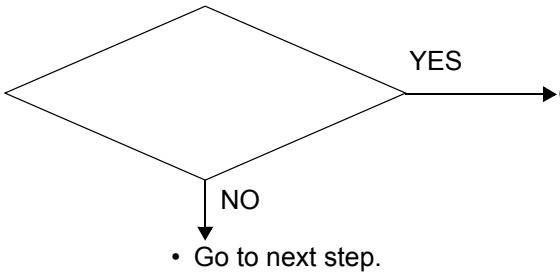

●Check
- Adjust brakes.
- If brakes do not stop machine, check for the following: failed brake shafts or bearings, failed differential input gear or differential carrier, or problems with differential bevel gears.

NOTE:

●Push machine until differential lock engages.

(G)

With the Hydro Static Transmission (HST) pressure release lever engaged (in DOWN position), does machine stop after differential lock engages?

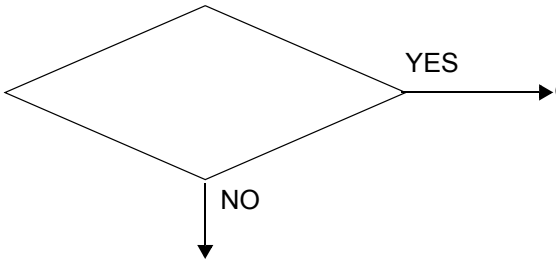

●Check
- Differential bevel gears or axles do not move in either direction.
- Brakes are on or dragging.
- Reverse orifice is plugged.

- Go to next step.

(H)

With the Hydro Static Transmission (HST) pressure release lever disengaged (in UP position), does the machine move forward and backward easily?

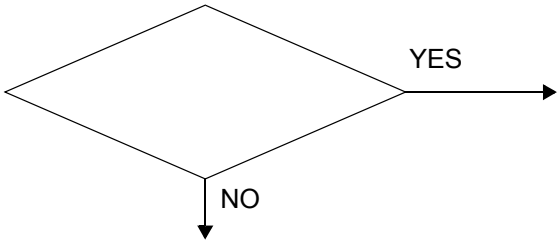

- Go to next step.

●Check
- The Hydro Static Transmission (HST) pressure release lever is bent, disconnected from the left-hand bracket, or is not pushing on the Hydro Static Transmission (HST) directional control valve pins. Repair the linkage.
- Check for dirt or corrosion binding the Hydro Static Transmission (HST) directional control valve pins.
- Check brakes for dragging.

(I)

- **Does the transmission control pedals and linkage move smoothly with slight resistance to movement (with brakes disengaged)?**

  NOTE:

  ●Linkage will return slower in colder temperatures.

- **Is there free play in the linkage between the pedals and swash plate shaft?**

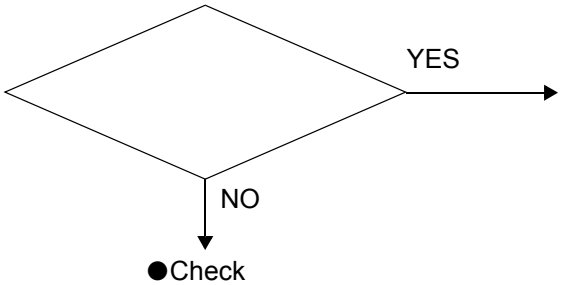

- Go to next step.

●Check
- Inspect the linkage for bent, binding or looseness.
- If pedals do not return to neutral, disconnect the damper (shock absorber). Pedals should return quickly.
- Disconnect control rod from swash plate arm. Check linkage for binding and repair.
- Is the linkage binding? Check for binding of the swash plate shaft, internal return/centering spring, and swash plate bushing.

(J) Transmission control pedals and linkage

- **With brake pedal engaged, the forward and reverse pedals are locked in neutral. (Engage Hydro Static Transmission (HST) pressure release lever and push machine to verify.)**

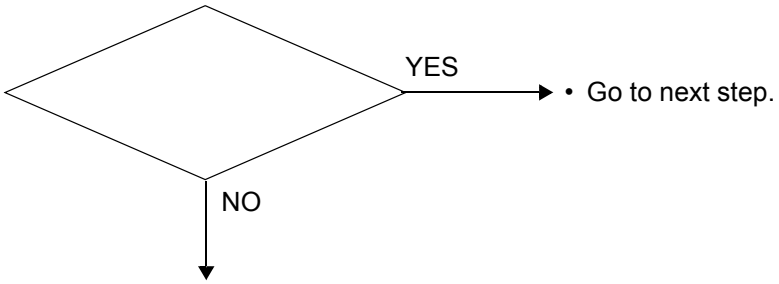

●Check
- Pedals are not locked in neutral.
- Brakes do not hold machine.

(K) To check the cruise control lever and linkage (if equipped), slightly press the forward pedal and engage the cruise control (with the brake pedal released).

- **Does the cruise control release when the forward pedal is pressed and released or the brake pedal is depressed?**

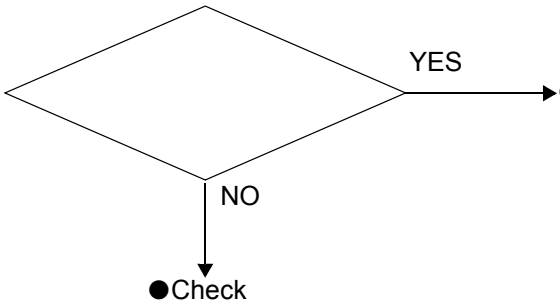

●Check
- Hydro Static Transmission (HST) complete test.

●Check
- Check linkage for bent, binding or disconnected links.
- Check cam teeth for wear if cruise control will not remain engaged.

4-5 Hydro Static Transmission (HST) Test (Condition: Engine running)

Test Preparation

- Start engine.
- Release parking brake.
- Move machine to open area for driving test.

(1) Hydro Static Transmission (HST)

(A)

With the parking brake applied, does the machine generate excessive noise during operation?

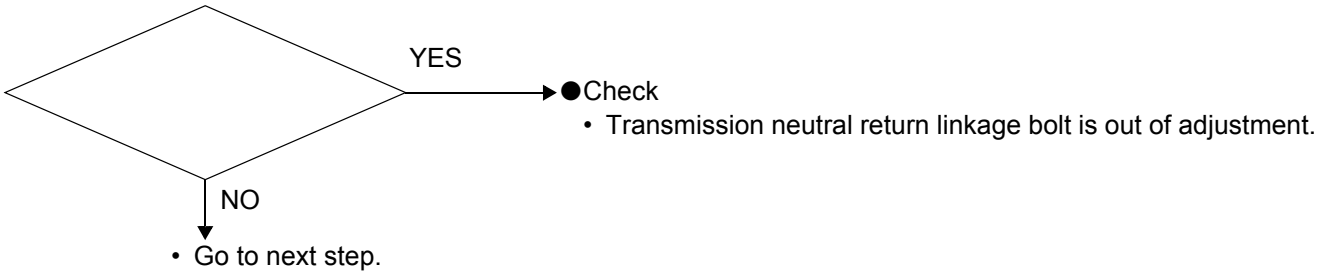

- Check
  - Transmission neutral return linkage bolt is out of adjustment.
- Go to next step.

(B) Test forward and reverse pedals. Drive machine forward and stop. Reverse and stop.

- **Does machine respond to pedal movement?**
  (Gradually increase forward speed up to 8.2 mph (13.2 km/h). The machine should stop within 7 to 10 ft (2.2 to 4 m) without use of the brake. Gradually increase speed; increase the speed in reverse to 5.5 mph (8.8 km/h). The machine should stop within 4 to 8 ft (1.2 to 1.8 m).

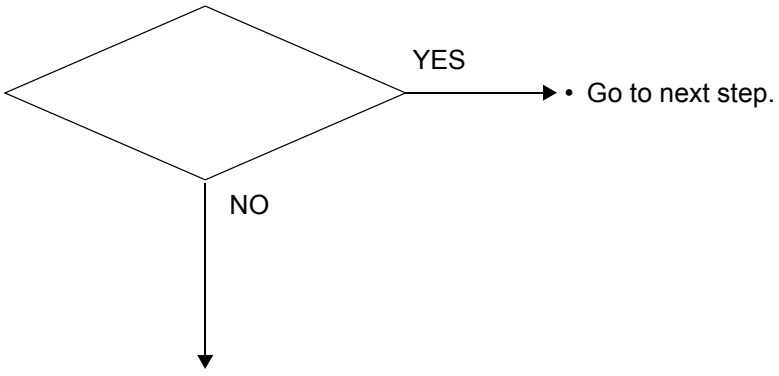

- Go to next step.
- Check
  - If the machine will not move or if the Hydro Static Transmission (HST) is jerky, check the Hydro Static Transmission (HST) pressure release lever.
  - If the machine still will not move, continue the testing sequence. If the machine does not stop within the set distance, check the linkage for binding, replace the dampener, and retest.
  - Check for binding of the swash plate shaft. Check for a weak or broken neutral return spring.

(C)

- **Are drive shaft bolts tight?**
- **Are splines worn or damaged?**
- **Does the drive shaft turn the input shaft?**

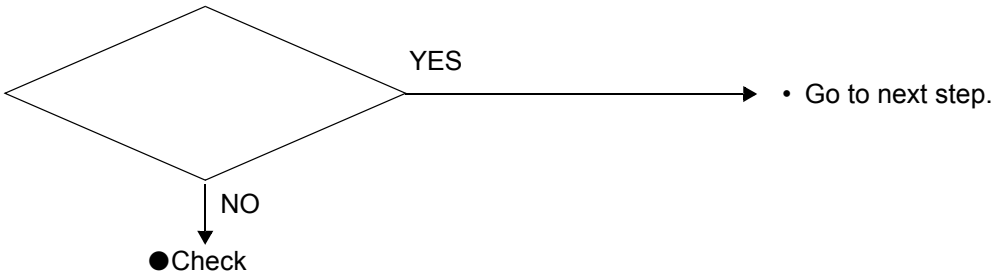

(D)

Test the pressure port of the charge pump. Is the charge pressure appropriate?

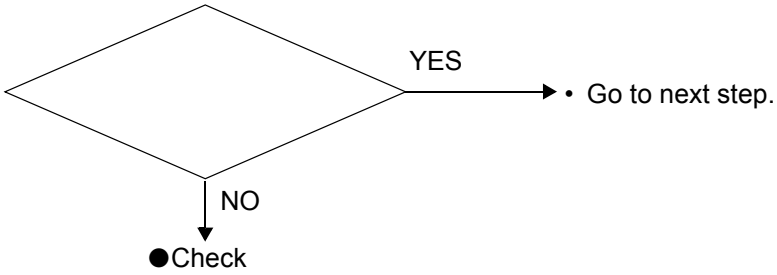

(E)

Test the pressure port of the charge pump. Does the machine fail to drive even with a charge pressure?

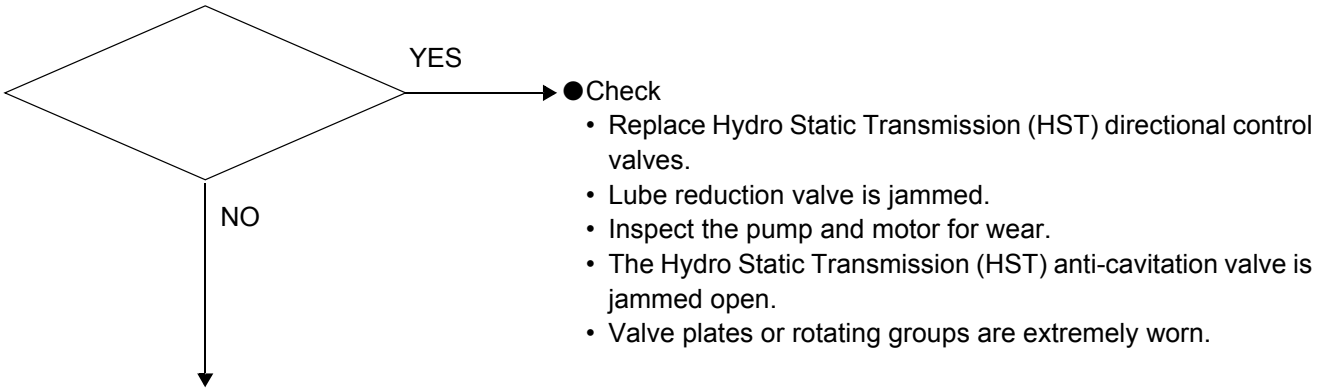

4-6 Axle does not Rotate

Symptom	Remedy	Part Catalog NPC-4949	
		Fig.	REF.
[When input shaft is not rotating]			
• Engine malfunctions	• Check and repair engine		
[When motor shaft (drive shaft in a 4WD state) is not rotating]			
• Failure of Hydro Static Transmission (HST) system	• See the "4-20 Troubleshooting for Hydro Static Transmission (HST)" page		
[When motor shaft (drive shaft in a 4WD state) is not rotating]			
• Gear breakage	• Identify and replace broken gear		
• Bearing breakage	• Identify and replace broken bearing		

4-7 Machine Speed is Extremely Slow

Symptom	Remedy	Part Catalog NPC-4949	
		Fig.	REF.
• Improper RPM of engine	• Adjust or repair engine RPM		
• Improper operation of sub-shift lever	• Adjust or repair the lever system		
• Failure of Hydro Static Transmission (HST) system	• See the "4-20 Troubleshooting for Hydro Static Transmission (HST)" page		

4-8 Stopping Distance is Extremely Long

Symptom	Remedy	Part Catalog NPC-4949	
		Fig.	REF.
• Abnormality of Neutral return spring	• Check Neutral return spring installation / replace Neutral return spring	45	5
• Failure of Hydro Static Transmission (HST) system	• See the "4-20 Troubleshooting for Hydro Static Transmission (HST)" page		

4-9 Stopping Distance is Extremely Short

Symptom	Remedy	Part Catalog NPC-4949	
		Fig.	REF.
• Abnormality of Neutral return spring	• Check Neutral return spring installation / replace Neutral return spring	45	5
• Failure of Hydro Static Transmission (HST) system	• See the "4-20 Troubleshooting for Hydro Static Transmission (HST)" page		

4-10 Axle does not Stop in a Neutral State

Symptom	Remedy	Part Catalog NPC-4949	
		Fig.	REF.
• Failure of Hydro Static Transmission (HST) system	• See the "4-20 Troubleshooting for Hydro Static Transmission (HST)" page	45	5

4-11 Brake Malfunctions

Symptom	Remedy	Part Catalog NPC-4949	
		Fig.	REF.
• Improper installation of links	• Adjust or repair the link system	65	
• Breakage of brake cam lever	• Replace brake cam lever	64	5
• Wear of disc-brake friction plate	• Replace friction plates and steel plates	64	1
• Breakage of final pinion shaft	• Replace final pinion shaft	55	2
• Breakage of differential lock pin	• Replace differential lock slider	57	14
• Breakage of the gear system	• Identify and replace broken gear		

4-12 Differential Lock Malfunctions

Symptom	Remedy	Part Catalog NPC-4949	
		Fig.	REF.
• Improper installation of links	• Adjust or repair the link system	58	
• Breakage of brake cam lever	• Replace brake cam lever	64	5
• Breakage of differential lock pin	• Replace differential lock slider	57	14
• Breakage of the gear system	• Identify and replace broken gear		

4-13 Power Take Off (PTO) RPM is Extremely Low

Symptom	Remedy	Part Catalog NPC-4949	
		Fig.	REF.
• Improper RPM of engine	• Adjust or repair engine RPM		
• Wear of PTO clutch friction plate	• Replace friction plates and steel plates	37	2

4-14 Extremely Long Power Take Off (PTO) Stopping Time

Symptom	Remedy	Part Catalog NPC-4949	
		Fig.	REF.
• Wear of PTO brake shoe	• Replace PTO brake shoe	38	8
• Permanent set or breakage of PTO brake spring	• Replace PTO brake kit	38	1

4-15 Power Take Off (PTO) Malfunctions

Symptom	Remedy	Part Catalog NPC-4949	
		Fig.	REF.
[When input shaft is not rotating]			
• Engine malfuntions	• Check and repair engine	45	5
[When input shaft is rotating]			
• Malfunction of solenoid valve	• Clean oil passages for solenoid valve or replace solenoid valve	41	
	• Check and repair electrical system		
• Lack of PTO hydraulic oil	• Ensure suitable quantity of hydraulic oil		
	• Check, clean and replace valve system	33/40	
• Breakage of PTO driving gear or bearing	• Identify and replace broken parts		
• Malfunction of PTO clutch	• Replace friction plates and steel plates	37	2
	• Replace PTO clutch pack	37	
• Failure of power pump (charge pump)	• See the "4-20 Troubleshooting for Hydro Static Transmission (HST)" page		

4-16 Power Take Off (PTO) does not Stop Normally

Symptom	Remedy	Part Catalog NPC-4949	
		Fig.	REF.
• Malfunction of solenoid valve	• Clean oil passages for solenoid valve or replace solenoid valve	41	
	• Check and repair electrical system		

4-17 A Discharge Flow Rate for External Take-Off is Extremely Low

Symptom	Remedy	Part Catalog NPC-4949	
		Fig.	REF.
• Improper RPM of engine	• Adjust or repair engine RPM		
• Trapped air	• Check and repair external piping installation		
	• Ensure suitable quantity of hydraulic oil		
• Excessively-high, negative suction pressure	• Check and replace oil filter	35	1
• Poor efficiency of gear pump	• Replace gear pump	40	3

4-18 Noise

Symptom	Remedy	Part Catalog NPC-4949	
		Fig.	REF.
[Noise from hydraulic system]			
• Noise from Hydro Static Transmission (HST)	• See the "4-20 Troubleshooting for Hydro Static Transmission (HST)" page		
[Noise from mechanical power train]			
• Improper fitting of differential lock pin	• Check and repair the link system	58	
• Wear or breakage of gear	• Identify and replace worn or broken gear		
• Wear or breakage of bearing	• Identify and replace worn or broken bearing		

4-19 Oil Oozes or Leaks

Symptom	Remedy	Part Catalog NPC-4949	
		Fig.	REF.
• Oil leakage from the liquid packing section	• After degreasing, apply liquid packing	31	
• Oil leakage from the paper packing section	• Replace paper packing	31/34	
• Oil leakage from the O-ring section	• Replace O-ring		
• Oil leakage from D-ring	• Replace D-ring	31	13
• Oil leakage from the oil seal section	• Replace oil seal		
• Oil leakage from any dent on the mating face	• Replace dented parts		
• Oil leakage from any cracked section	• Replace cracked parts		
• Oil leakage from any strained or deformed section	• Replace strained or deformed parts		
• Loosened or improperly tightened bolt(s)	• Properly control tightening torque		
• Oil spillage from air breather	• Ensure suitable quantity of hydraulic oil		
	• Control oil temperature		
• Oil leakage from Hydro Static Transmission (HST)	• See the "4-20 Troubleshooting for Hydro Static Transmission (HST)" page		

4-20 Troubleshooting for Hydro Static Transmission (HST)

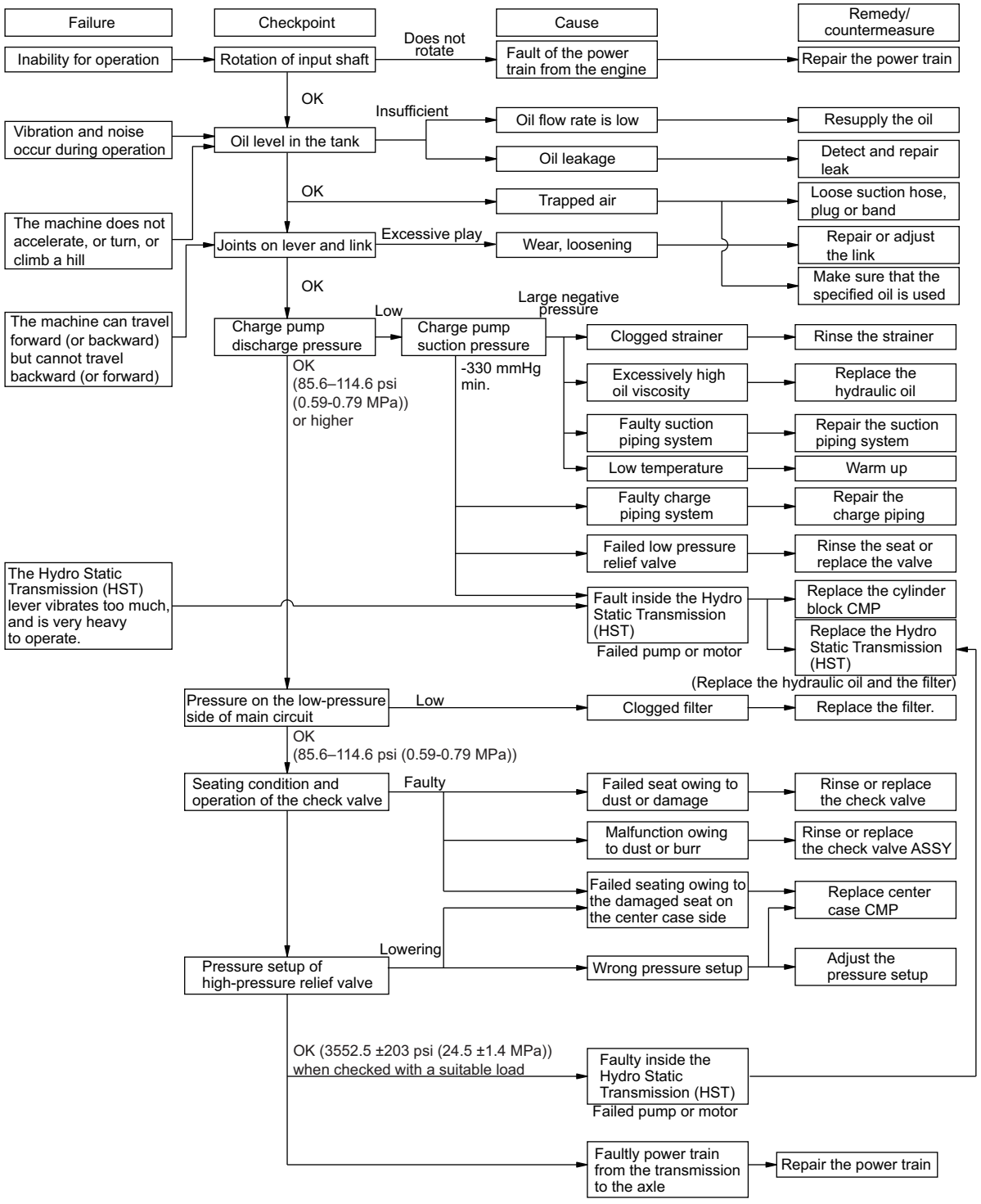

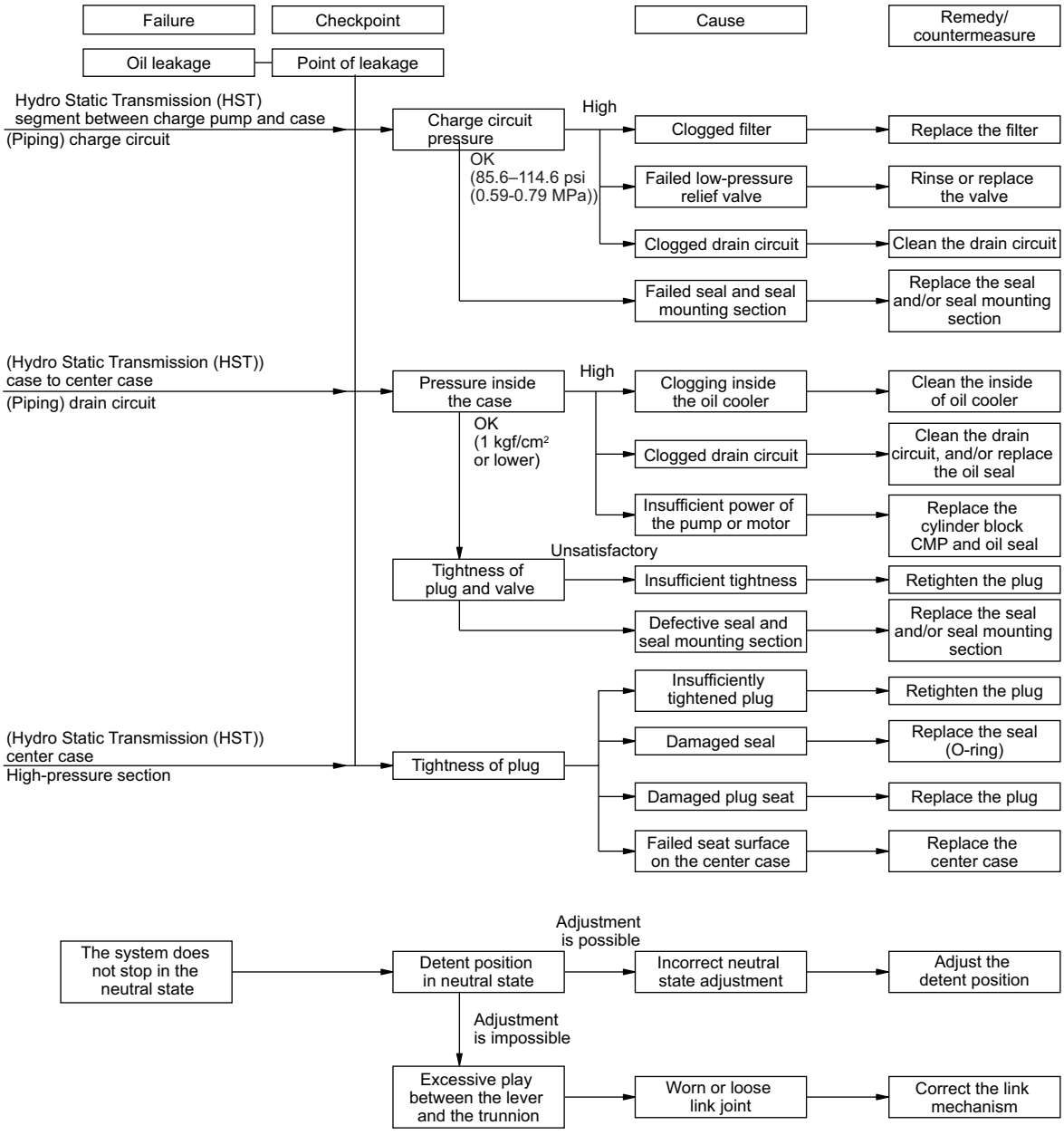
Failure
Checkpoint
Cause
Remedy/ countermeasure
Oil leakage
Point of leakage
Hydro Static Transmission (HST) segment between charge pump and case
(Piping) charge circuit
Charge circuit pressure
High
Clogged filter
Replace the filter
OK (85.6–114.6 psi (0.59-0.79 MPa))
Failed low-pressure relief valve
Rinse or replace the valve
Clogged drain circuit
Clean the drain circuit
Failed seal and seal mounting section
Replace the seal and/or seal mounting section
(Hydro Static Transmission (HST)) case to center case
(Piping) drain circuit
Pressure inside the case
High
Clogging inside the oil cooler
Clean the inside of oil cooler
OK (1 kgf/cm2 or lower)
Clogged drain circuit
Clean the drain circuit, and/or replace the oil seal
Insufficient power of the pump or motor
Replace the cylinder block CMP and oil seal
Unsatisfactory
Tightness of plug and valve
Insufficient tightness
Retighten the plug
Defective seal and seal mounting section
Replace the seal and/or seal mounting section
(Hydro Static Transmission (HST)) center case
High-pressure section
Tightness of plug
Insufficiently tightened plug
Retighten the plug
Damaged seal
Replace the seal (O-ring)
Damaged plug seat
Replace the plug
Failed seat surface on the center case
Replace the center case
The system does not stop in the neutral state
Adjustment is possible
Detent position in neutral state
Incorrect neutral state adjustment
Adjust the detent position
Adjustment is impossible
Excessive play between the lever and the trunnion
Worn or loose link joint
Correct the link mechanism

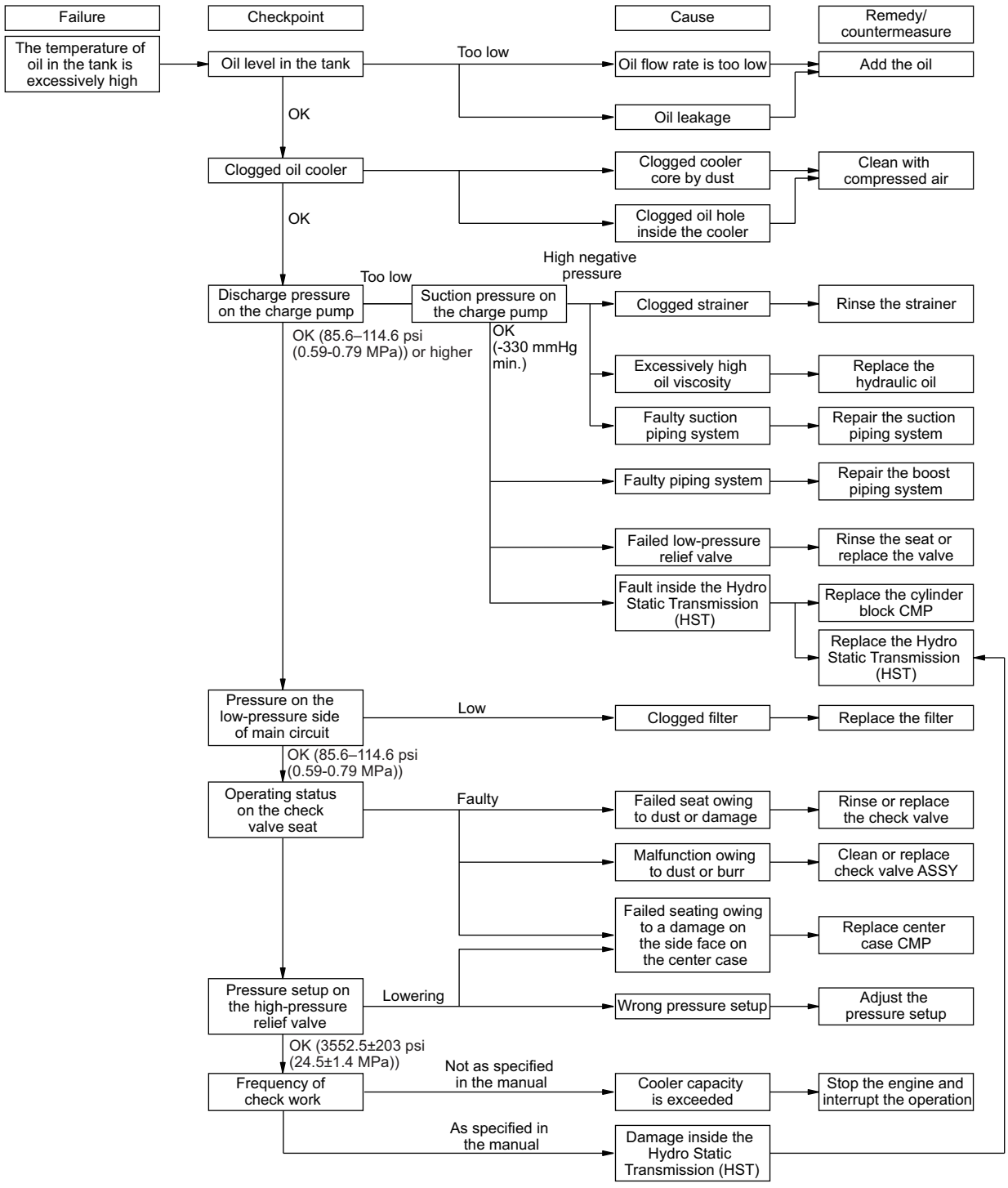
Failure
Checkpoint
Cause
Remedy/ countermeasure
The temperature of oil in the tank is excessively high
Oil level in the tank
Too low
Oil flow rate is too low
Add the oil
Oil leakage
OK
Clogged oil cooler
Clogged cooler core by dust
Clean with compressed air
Clogged oil hole inside the cooler
OK
High negative pressure
Too low
Discharge pressure on the charge pump
Suction pressure on the charge pump
Clogged strainer
Rinse the strainer
OK (85.6–114.6 psi (0.59-0.79 MPa)) or higher
OK (-330 mmHg min.)
Excessively high oil viscosity
Replace the hydraulic oil
Faulty suction piping system
Repair the suction piping system
Faulty piping system
Repair the boost piping system
Failed low-pressure relief valve
Rinse the seat or replace the valve
Fault inside the Hydro Static Transmission (HST)
Replace the cylinder block CMP
Replace the Hydro Static Transmission (HST)
Pressure on the low-pressure side of main circuit
Low
Clogged filter
Replace the filter
OK (85.6–114.6 psi (0.59-0.79 MPa))
Operating status on the check valve seat
Faulty
Failed seat owing to dust or damage
Rinse or replace the check valve
Malfunction owing to dust or burr
Clean or replace check valve ASSY
Failed seating owing to a damage on the side face on the center case
Replace center case CMP
Pressure setup on the high-pressure relief valve
Lowering
Wrong pressure setup
Adjust the pressure setup
OK (3552.5±203 psi (24.5±1.4 MPa))
Frequency of check work
Not as specified in the manual
Cooler capacity is exceeded
Stop the engine and interrupt the operation
As specified in the manual
Damage inside the Hydro Static Transmission (HST)

4-21 Check items for servicing

4-21-1 Measurement of gear pump flow

Connect the (A) port (9/16-18UNF-2B) and the (B) port (M16) with a flow meter installed between the (A) and (B) ports.
Measure the flow rate under the following conditions.

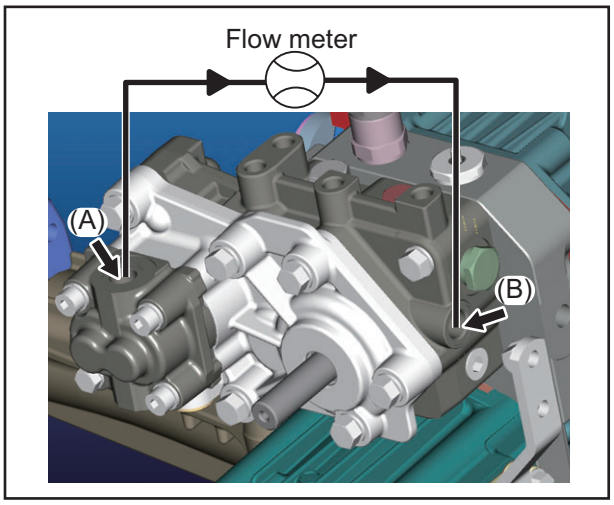

[Measuring conditions]
Engine: 3300 rpm (Hi idle)
Normal operating oil temperature: 113 ±18°F (45 ±10°C)
(See "5-3 Warming Up the Hydraulic" on page 5-54)

If the measured flow does not exceed 3.2 gallons/min (12 L/min), see the troubleshooting.

NOTE:

- Usually, in a range of 12.5 to 15.0 L/min.

4-21-2 Measurement of resistance valve pressure

Remove the plug (A) and connect a pressure gauge to the port (1/2-20UNF-2B).
Measure the pressure under the following conditions.

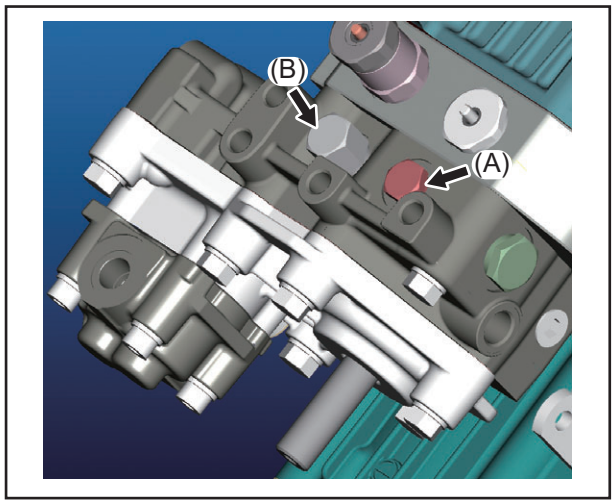

[Measuring conditions]
Engine: 3300 rpm (Hi idle)
Normal operating oil temperature: 113 ±18°F (45 ±10°C)
(See "5-3 Warming Up the Hydraulic" on page 5-54)

If the measured pressure does not exceed its preset pressure (313.2-371.2 psi (2.16-2.56 MPa)), remove the plug (B), by inserting suitable shims (192157-27090) between the plug (B) and the spring. Reinstall the plug (B), adjust the pressure to its preset pressure.

After adjusting the pressure, tighten the plug (B) at a tightening torque of 18.1 ±1.8 ft•lb (24.5 ±2.5 N•m).

NOTE:

- One shim corresponds with additional pressure application of 10.2 psi (0.07 MPa).

4-21-3 Measuring the P.T.O relief pressure

Remove the tapered thread plug (C), and instead, connect a pressure gauge. (Remove the old sealing tape.) Measure the pressure according to the following pressure measuring conditions.

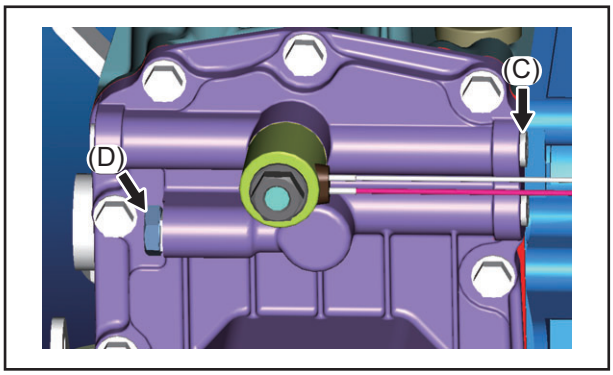

[Measuring conditions]
Engine: 3300 rpm (Hi idle)
Normal operating oil temperature: 113 ±18°F (45 ±10°C)
(See "5-3 Warming Up the Hydraulic" on page 5-54)

If the measured pressure does not exceed its preset pressure (232.0-275.5 psi (1.6-1.9 MPa)), remove the plug (D). Then, by inserting suitable shims (192157-27090) between the plug (D) and the spring to reinstall the plug (D), adjust the pressure to its preset pressure.

After adjusting the pressure, wrap sealing tape around the tapered thread plug and tighten the plug to 13.0-16.6 ft•lb (17.6-22.5 N•m).

NOTE:

- One shim corresponds with additional pressure application of 3.6 psi (0.025 MPa).

K93 T/A Service Check List

	Daily	50 hrs	50 hrs or annually	250 hrs	250 hrs or annually	450 hrs	650 hrs	850 hrs	1050 hrs	1250 hrs	1450 hrs
Oil level of T/A	Yes										
Change T/A oil and Filter		Yes	Yes	Yes	Yes	Yes	Yes	Yes	Yes	Yes	Yes
Grease up for drive shafts for 4WD and input		Yes	Yes	Yes	Yes	Yes	Yes	Yes	Yes	Yes	Yes
Clean T/A oil cooler fins		Yes	Yes	Yes	Yes	Yes	Yes	Yes	Yes	Yes	Yes
Check/Adjust pressure of tires			Yes		Yes	Yes	Yes	Yes	Yes	Yes	Yes

NOTE:

- xx hrs or annually means whichever comes first.

5. Test and Adjustment

5-1 Hydro Static Transmission (HST) Link Adjustment

When installing the switch arm, adjust the clearance between the switch arm and the switch to zero (0) clearance, after installing bearing and return spring followed by determining neutral position.

NOTE:

●Tightening torque of bolts and nuts are according to chart below unless otherwise specified.

Bolt Diameter	ft·lbs	N·m	kg·m
6 mm	6 to 9	8 to 12	0.8 to 1.2
8 mm	17 to 22	23 to 29	2.3 to 3.0
10 mm	33 to 43	44 to 59	4.5 to 6.0
12 mm	58 to 72	78 to 98	8.0 to 10.0
14 mm	87 to 109	118 to 147	12.0 to 15.0
16 mm	123 to 152	167 to 206	17.0 to 21.0
18 mm	174 to 210	235 to 284	24.0 to 29.0
20 mm	239 to 297	324 to 402	33.0 to 41.0

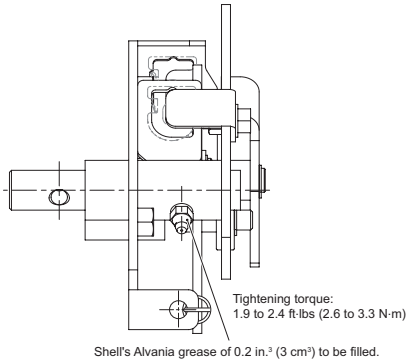

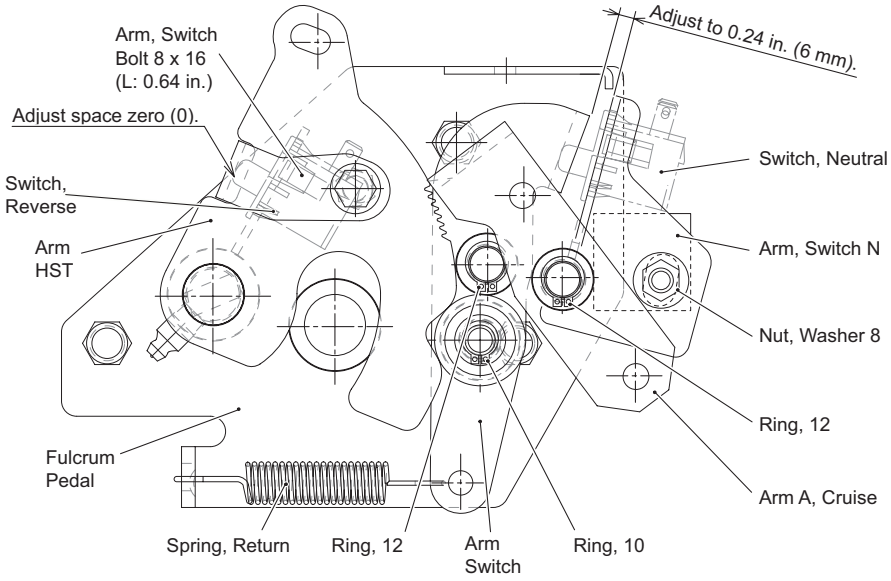

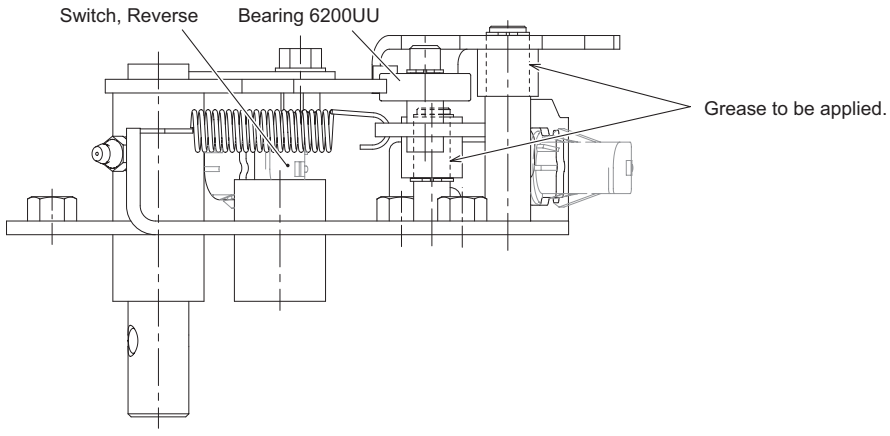

5-2 Operation System Right Side Rod

1. Hydro Static Transmission (HST) rod adjustment
   - After installing the pedal link assembly, set the rod length of *-marked adjuster to elongated hole shown in detail Z. Then unscrew nut 1/4 turn and lock it, so that the pin C should have free play.
   - Remove Hydro Static Transmission (HST) pedal. After installing step, reinstall Hydro Static Transmission (HST) pedal.
2. Adjustment of pedal stopper F
   - Move Hydro Static Transmission (HST) pedal to transmission stopper toward F side by hand. Align *-marked screw position and tighten bolt 1/2 turn and lock it with nut.

NOTE:

●Tightening torque of bolts and nuts are according to chart below unless otherwise specified.

Bolt Diameter	ft·lbs	N·m	kg·m
6 mm	6 to 9	8 to 12	0.8 to 1.2
8 mm	17 to 22	23 to 29	2.3 to 3.0
10 mm	33 to 43	44 to 59	4.5 to 6.0
12 mm	58 to 72	78 to 98	8.0 to 10.0
14 mm	87 to 109	118 to 147	12.0 to 15.0
16 mm	123 to 152	167 to 206	17.0 to 21.0
18 mm	174 to 210	235 to 284	24.0 to 29.0
20 mm	239 to 297	324 to 402	33.0 to 41.0

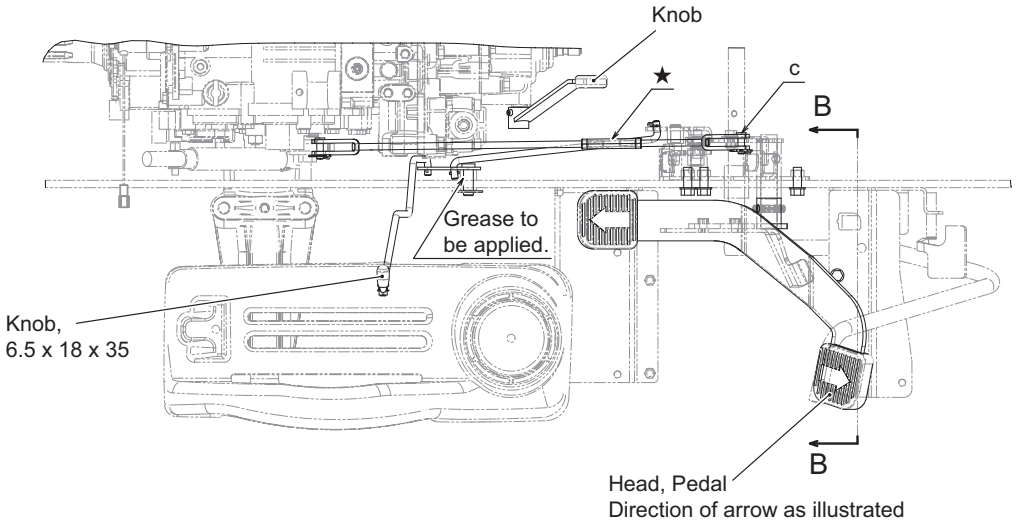

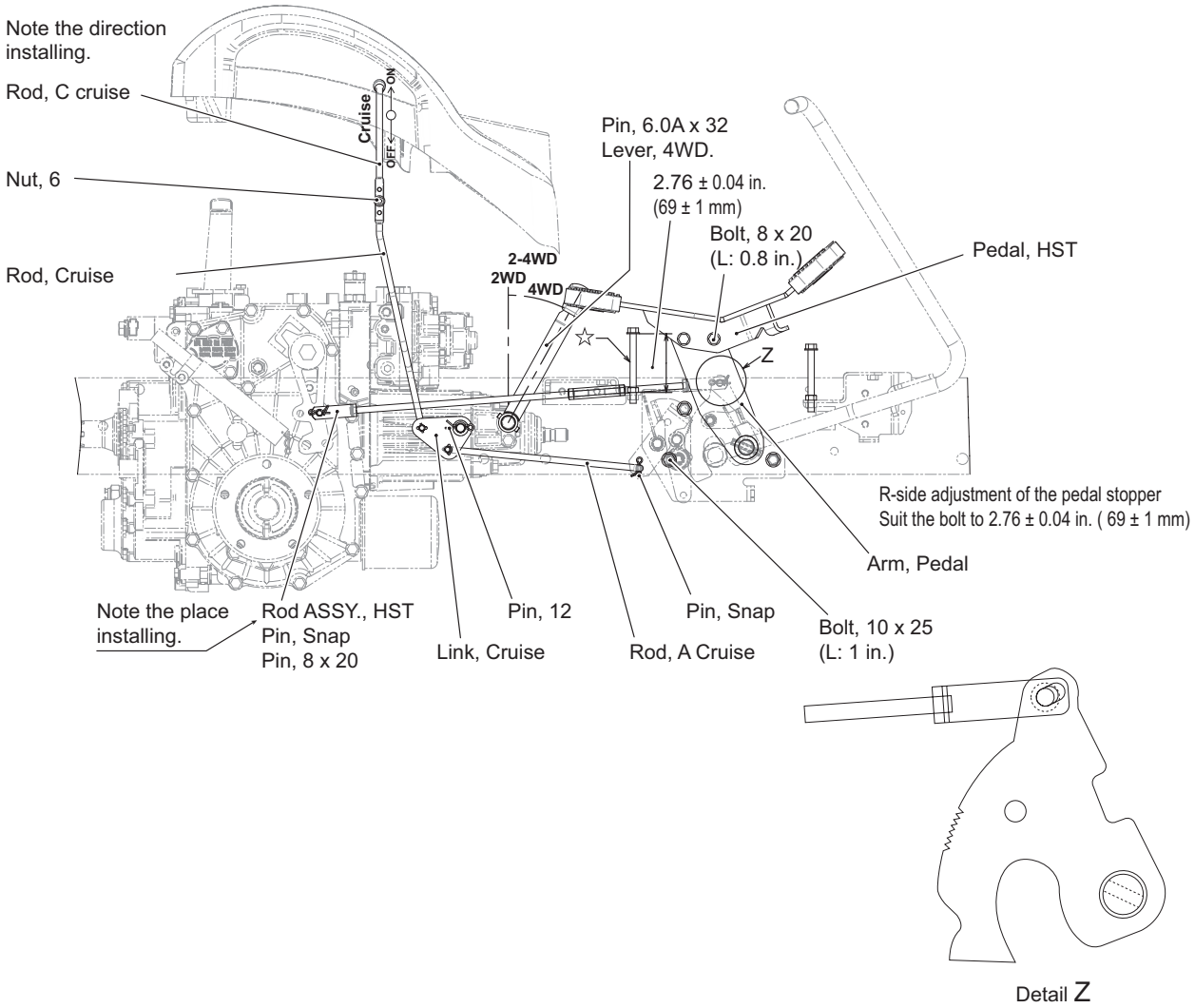

NOTE:

●Adjust so that pin C has free play in the elongated hole of the Hydro Static Transmission (HST) arm.

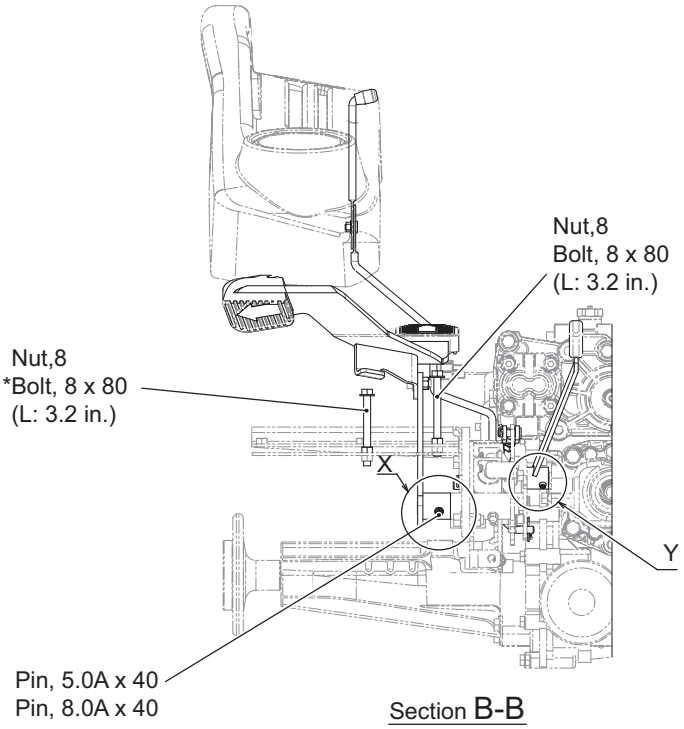

Section B-B

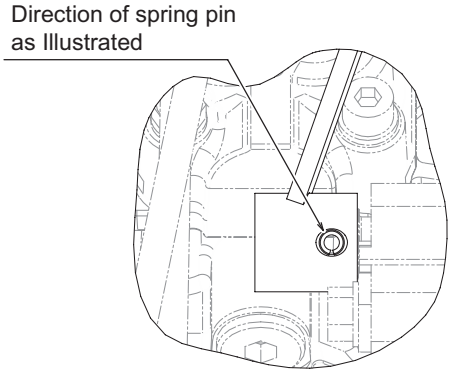

Detail Y

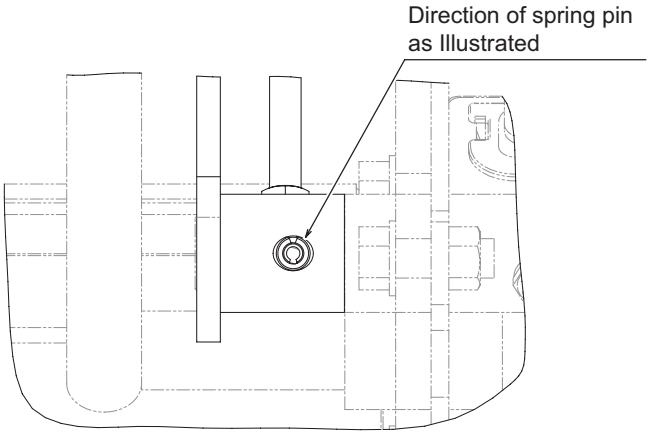

Detail X

5-3 Warming Up the Hydraulic Oil

Reason:

For accuracy during hydraulic tests, the oil must be warmed up to normal operating temperature.

Required items:

Temperature gauge	

Procedure:

1. Apply the parking brake.
2. Install the temperature gauge on the transmission's oil filter.
3. Start the engine and accelerate to full throttle.

⚠ CAUTION

●To prevent damage, make sure that the engine does not overheat.

4. Hold the implement control lever in the raise-implement position.
5. Run through all of the tractor's hydraulic functions at regular intervals in order to evenly distribute the heated oil.
6. Make sure that the oil is warmed up to the normal operating temperature (usually 38 to 49°C (100 to 120°F)).

5-4 Testing the Power Take Off (PTO) Engagement Pressure and Brakes

5-4-1 Testing the PTO engagement pressure

Reason:

Perform this test in order to check the clutch engagement pressure and the Power Take Off (PTO) brake.

Procedure:

*** To perform only the brake test, proceed directly to "Testing the Power Take Off (PTO) brake" below.**

1. Remove the upper right hex-plug port on the rear transmission case.

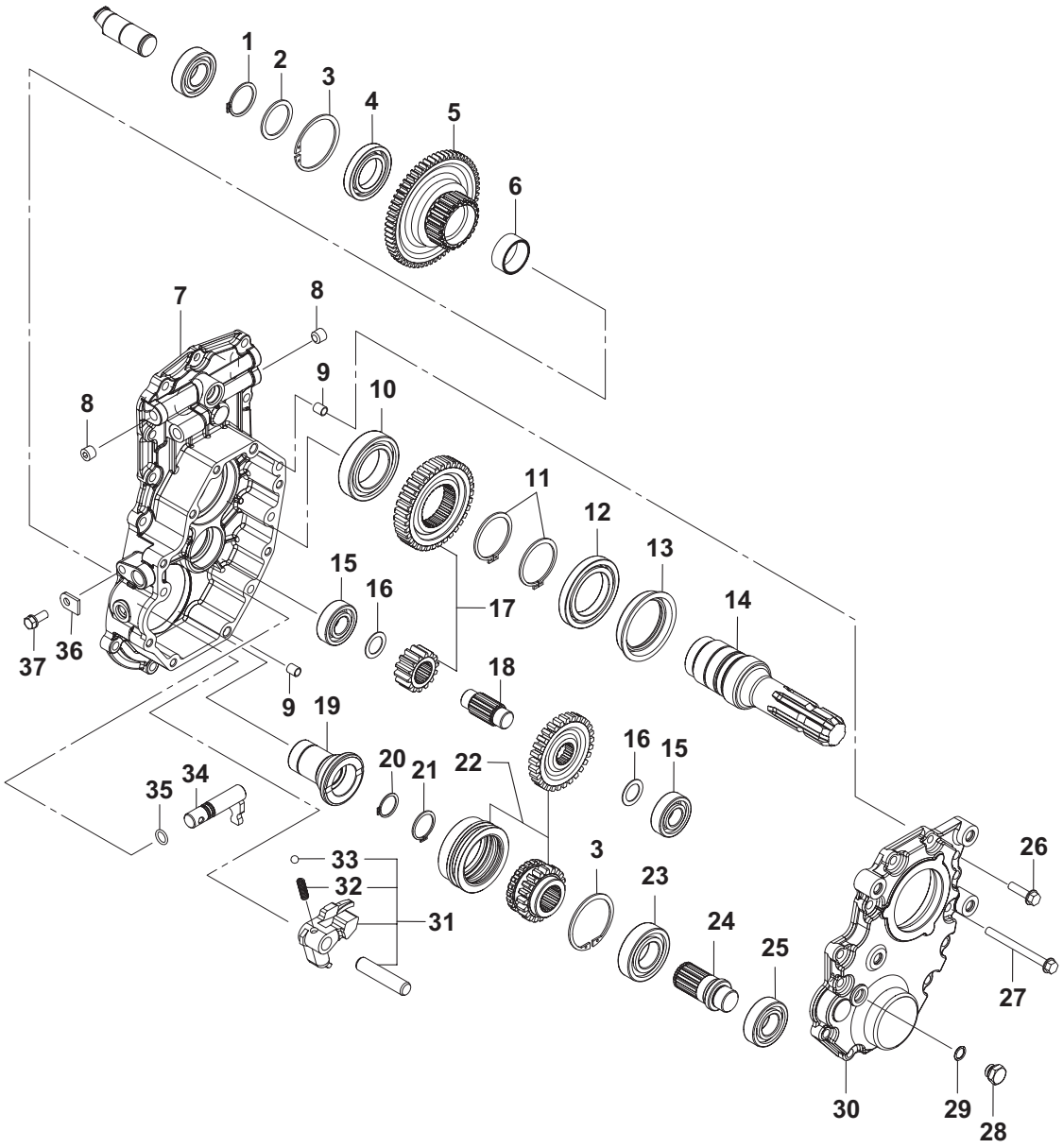

Fig. 1

1. Ring, 35
2. Spacer, Clutch Shaft
3. Ring, 62
4. Bearing, 16007
5. Gear, PTO Z=62 B
6. Needle, 354017
7. Case, Rear PTO
8. Plug, R 02
9. Collar, 8 x 10 x 11.5
10. Bearing, 6009 NTN
11. Ring, 50
12. Bearing, 16010
13. Seal, TCFY 557214
14. Rear PTO Shaft
15. Bearing, 6204 RSH 2
16. Washer
17. Gear Kit, 14 - 35
18. Shaft, Rear PTO Idle
19. Collar, Spline
20. Ring, 24
21. Ring, 29
22. Gear Kit, 20 - 29
23. Bearing, 6206 NTN
24. Shaft, Rear PTO
25. Bearing, 6205 NTN
26. Bolt, 8 x 30 (L: 1.2 in.)
27. Bolt, 8 x 90 (L: 3.6 in.)
28. Plug 9 / 16 - 18 UNF
29. O - Ring, 6 - 1
30. Cover, Rear PTO Case
31. Fork Kit, MBR
32. Spring
33. Ball, 5 / 16
34. Shaft, MBR Change
35. Packing, P 12.5
36. Plate, Keep
37. Bolt, 8 x 20 (L: 0.8 in.)



IMPORTANT

●To prevent damage, be careful not to over-tighten any of the connections.

2. Install the hose and the pressure gauge.
3. Start the engine and accelerate to full throttle.
4. Release the brake pedal and, with the operator sitting on the seat, engage the Power Take Off (PTO) switch.
5. Check the reading on the pressure gauge.

Results:

- If the gauge reading for the pressure is to specifications (1520 to 1860 kPa (220 to 270 psi)), the engagement valve is working properly. If there is still a problem with PTO engagement, check the clutch disk for wear.
- If no pressure is shown on the gauge, See Chapter 4. ELECTRICAL to check the engagement solenoid and circuit. Make sure the Power Take Off (PTO) engagement valve is installed properly, and that there is no damage or scoring on the solenoid shaft. If the solenoid is working properly, check the modulation opening on the lube reduction valve for obstructions.

Specifications:

Engagement pressure	1520 to 1860 kPa (220 to 270 psi)

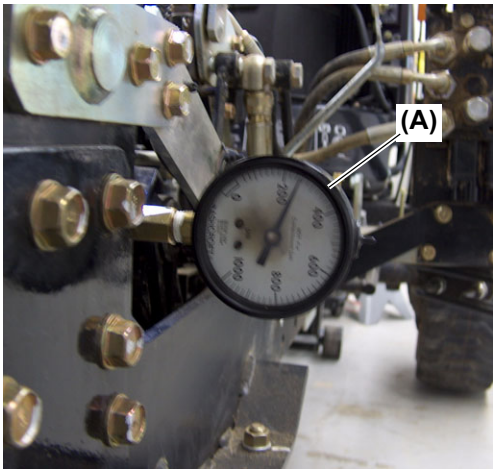

Fig. 2

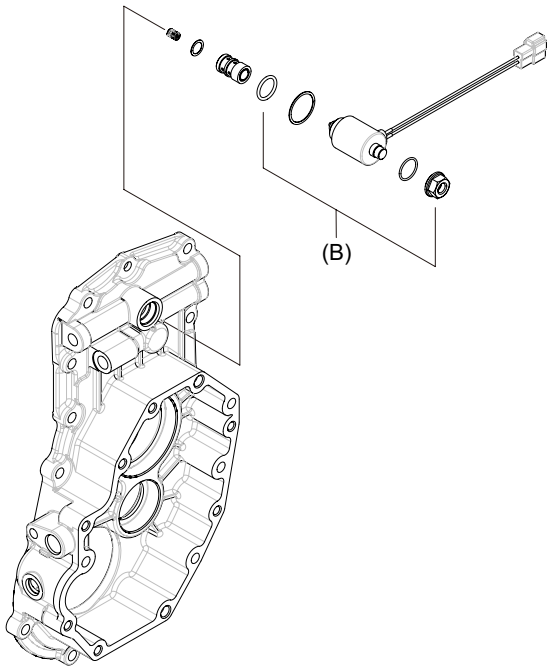

Fig. 3

(A) Pressure gauge
(B) Solenoid valve

- If the pressure is less than specifications, perform the same test on **port situated opposite from that tested above** and compare the pressure readings. If there is a difference, check the solenoid valve (Fig. 3, (B)) for sticking or a missing shim, or for malfunctioning of the solenoid itself.
- If both of the measured pressures are low, check the Power Take Off (PTO)'s pressure control valve. Also check the Power Take Off (PTO) pressure control valve spring and seat for damage and the valve for scoring. If necessary, add shims to increase the pressure. If the pressure does not increase, check modulation opening on the lube reduction valve.

5-4-2 Testing the Power Take Off (PTO) brake

Reason:
The Power Take Off (PTO) brake should stop the implement within five seconds. The Power Take Off (PTO) shaft should also not rotate when the Power Take Off (PTO) is turned off.

Procedure:
1. Attach an implement and turn on the Power Take Off (PTO).
2. Start the engine and accelerate to full throttle.
3. Turn off the Power Take Off (PTO) and measure the time it takes for the implement to come to a complete stop.

Results:
- If the implement stops within five seconds and remains stopped, the Power Take Off (PTO) brake is working properly.
- If the implement does not stop within five seconds, consider the following:
  - The size of the implement may be too large or require its own brake.
  - The brake springs may be weak or broken.
  - The brake shoe may be worn or the Power Take Off (PTO) clutch hub and gear assembly scored.
  - The clutch piston return spring may be weak or broken.
  - Pressure may not be released from the engagement solenoid valve, causing the clutch to remain engaged.

5-5 Adjusting the Transaxle for Neutral Creep

Reason:
Perform this adjustment in order to ensure that the tractor does not creep when the pedals are set to neutral.

NOTE:

- If intermittent creeping is occurring, first inspect the transmission control linkage for damage or binding and repair any problems before performing this adjustment procedure.

Procedure:

⚠ CAUTION

To prevent injury always place the frame and/or rear axles on jack stands and keep away from the turning wheels.

- If the transaxle is out of adjustment, the drive wheels will rotate freely when the tractor is raised off the ground and the engine is running during the adjustment procedure.

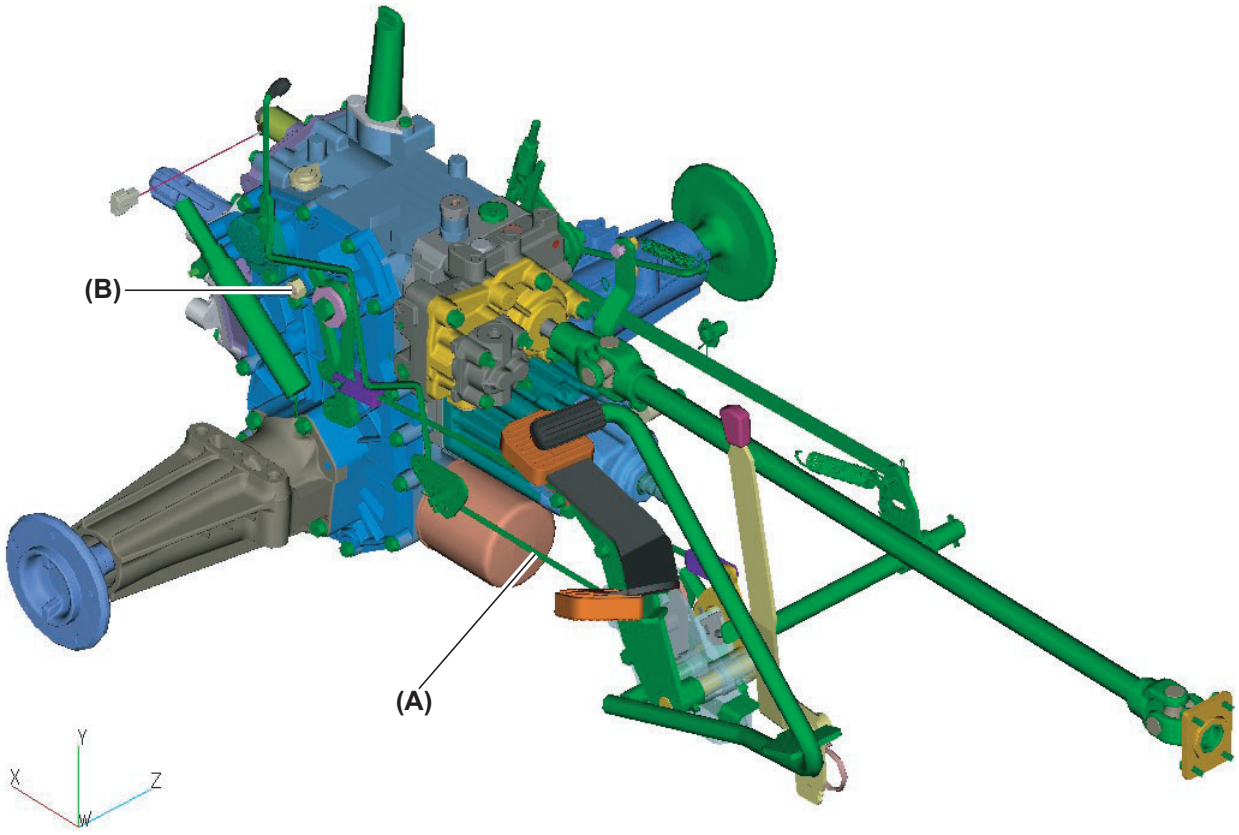

Fig. 1

(A) Turn buckle
(B) Eccentric cam nut

1. Lift the tractor with a hoist, support the rear wheels off the ground and place the rear axle on jack stands.

NOTE:

- The photo above shows the fender deck removed in order to illustrate the location for adjustment. Adjustment can be accomplished through the cutout in the right side of the frame (Fig. 1, (A)).

2. Loosen the lock nut on turn buckle (Fig. 1, (A)).
3. Have someone activate the seat safety switch, or use a jumper wire to bypass the switch.
4. Start the engine and run at a low idle.
5. With the brakes disengaged, turn the eccentric cam nut back and forth until the rear wheels stop turning.
6. Retighten the lock nut. Make sure the adjustment does not change. If it does change, use a wrench to tighten the lock nut from the rear of tractor.
7. Depress both the forward and reverse drive pedals, and then release them to check the adjustment. Repeat the adjustment procedure if necessary.
8. Lower the tractor to the ground. If you used a jumper wire to bypass the seat switch, remove the wire.

Results:

- If neutral does not hold, turn the eccentric cam nut 180 and repeat the adjustment. If the drive wheels still continue to rotate, check for binding or wear in the control linkage. Then disconnect the linkage and repeat adjustment.
- If the drive wheels still continue to rotate, check for binding or wear in the control linkage. Then disconnect the linkage and repeat adjustment.
- If the wheels continue to rotate after adjustment even with the control linkage disconnected, check the bushing on the swash plate shaft for binding or wear. Also check the neutral return spring, the pump and the motor valve plate for wear.



IMPORTANT

- To prevent damage, be sure to remove the jumper wire used to bypass the seat switch.

5-6 Adjusting the Transaxle Control Linkage

Reason:
Perform this adjustment in order to ensure that the transmission returns to neutral and the control pedals are locked in neutral when the brake is set.

Procedure:
1. Make sure the tractor is parked safely and securely.
2. Check the neutral creep adjustment for the transmission neutral and readjust if necessary. (See "5-5 Adjusting the Transaxle for Neutral Creep", page 5-61.)

5-7 Criteria for Replacing Parts

5-7-1 Criteria for replacing wear parts of the PTO clutch

1. With all of the friction and steel plates moved toward the circlip without any gap between them, measure the gap between the machined groove of the clutch housing and the uppermost steel plate.
2. If the gap is not less than 0.10 in. (2.7 mm), replace the complete set of the friction plates and steel plates.

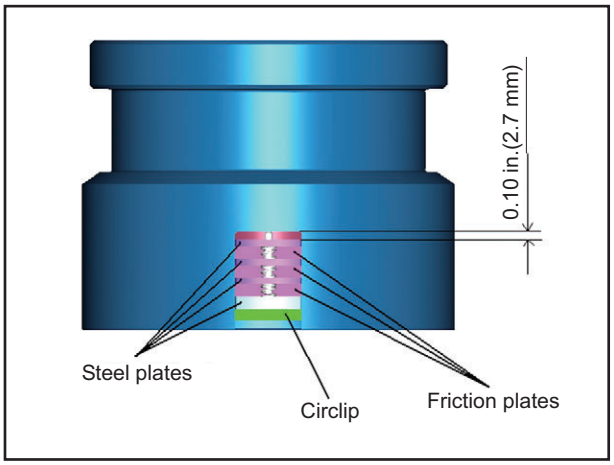

5-7-2 Criteria for replacing wearing parts of the PTO brake shoe

1. Replace the brake shoe before its wear reaches to the bottom of the grid grooves engraved on the surface.

NOTE:

- The depth of grooves on a factory-fresh brake shoe measures 0.06 in. (1.5 mm).

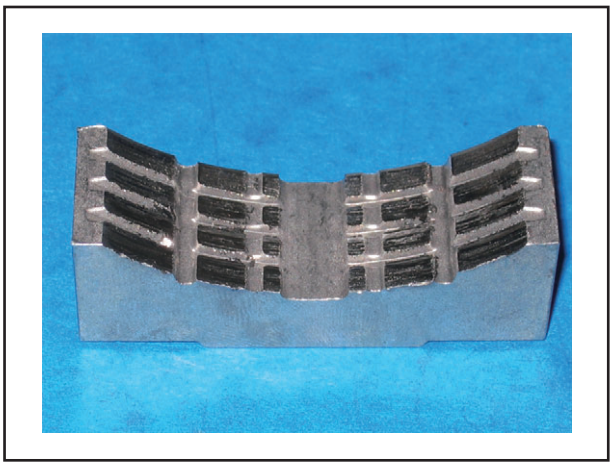

5-7-3 Criteria for replacing wear parts of the disc brake

1. Take the friction and steel plates out of the brake chamber. As shown in the figure to the right, align the 2 friction plates in such a way that they are sandwiched between the steel plates.
2. With the above plates tightly pressed together, measure their total thickness.
3. If the thickness is not more than 0.4 in. (9.8 mm), replace the complete set of the friction plates and steel plates.

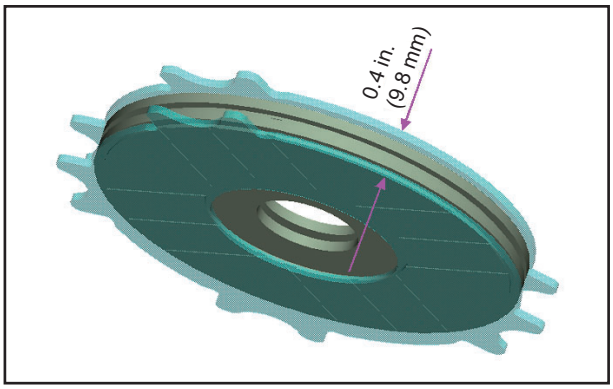

5-7-4 Criteria for rotating-group replacement

No.	Description	Checkpoints/shape	Standard dimensions	Limit for use
1	Piston ASSY	a. Play between the piston and caulked portion on shoe: ε 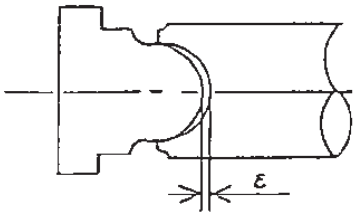	0.006 in. (0.15 mm)	ε < 0.008 in. (0.2 mm)
		b. Diametric clearance between the piston and cylinder block: δ (δ = D - d) 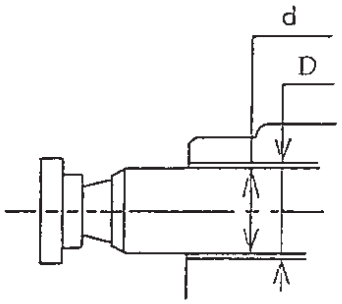	0.009 in. (0.23 mm)	δ < 0.002 in. (0.05 mm)
		c. Thickness of shoe: t 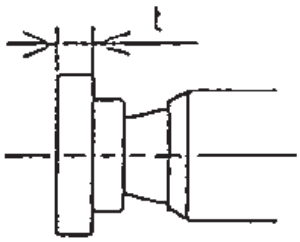	0.119 in. (3.05 mm)	t > 0.115 in. (2.95 mm)
		d. Roughness on the sliding surface of shoe	8 µin	< 16 µin
2	Cylinder block	Roughness of the sliding surface relative to the valve plate	8 µin	< 16 µin
3	Valve plate	Roughness of the sliding surface relative to the cylinder block		
4	Thrust plate	Roughness of the sliding surface relative to the piston ASSY		

NOTE:

- To be able to measure the roughness on the sliding surfaces at 1d, 2, 3 and 4, a special measuring tool is necessary.
  When the tractor develops problems such as inability to climb a slope, an excessive wear/damage may be found on various areas on the shoe. Then, replace the shoe with a new one.

5-7-5 List of replacement parts when disassembled

Transmission section					
Description	Component code	Quantity per Hydro Static Transmission (HST) unit	Applicable area	Part Catalog NPC-4949	
				Fig.	REF.
O-ring P10	CY-24311-000100	1	Pin (for PTO brake)	38	5
O-ring P12.5	CY-24311-000125	1	Variable-speed shaft (R-PTO)	42	32
O-ring P12.5	CY-24311-000125	1	Shift shaft (for 4WD)	49	4
O-ring P16	CY-24311-000160	1	Brake cam lever shaft	64	7
O-ring P26	CY-24311-000260	2	Swash plate	31	34
O-ring P10A	CY-24311-240100	1	Fulcrum (for eccentricity 10)	45	16
O-ring G75	CY-24321-000750	1	Clutch piston	37	18
O-ring 1A 2045	CY-24351-020450	1	Pin (for PTO brake)	38	6
Seal ring 17203	CY-192157-26350	1	Clutch shaft	37	13
Oil seal TC253807	CY-24421-253807	1	Mid PTO shaft	31	36
Oil seal TC254008	CY-24421-254008	1	Front cover	47	15
Oil seal TCYF557214	CY-192157-26980	1	Rear PTO shaft	42	10
Oil seal TC395511	CY-192157-32370	2	Axle shaft L/R	56	4
Oil seal TC162606	CY-194065-27270	1	Differential lock fork shaft	31	26
Round circlip 12 x 1.6	CY-22207-012160	1	Motor shaft	54	3
Circlip C (shaft 16)	CY-22242-000160	2	Differential lock fork shaft	57	7
External needle circlip (shaft: 12)	CY-192157-26330	1	Pump shaft	37	12
Packing (for center case)	CY-192157-24192	1	Center case	31	11
Packing (for front cover)	CY-1A7050-28560	1	Front over	47	9
Split pin (size: 2.0 x 20)	CY-22417-200200	1	Fulcrum (for differential lock)	57	13

Hydro Static Transmission (HST) / Power pump / Gear pump section					
Description	Component code	Quantity per Hydro Static Transmis-sion (HST) unit	Applicable area	Part Catalog NPC-4949	
				Fig.	REF.
O-ring 1015	CY-192154-24670	1	Check valve	33	11
O-ring 1015	CY-192154-24670	1	Tow relief valve		
Backup ring (size: 18)	CY-192157-40180	1	Check valve	33	16
Backup ring (size: 18)	CY-192157-40180	1	Tow relief valve		
Packing (for motor case)	CY-192157-24560	1	Motor case	34	3
Packing (for side case)	CY-187K06-24570	1	Side cover	34	4
Packing (for pump cover)	CY-187K06-29620	1	Cover (for pump body)	53	3
Oil seal TC162606	CY-194065-27270	1	Side cover	34	7
Oil seal TC173508	CY-24421-173508	1	Cover (for pump body)	53	27
Circlip C (shaft 16)	CY-22242-000160	1	Control arm	34	15
Circlip C (shaft 17)	CY-192167-25310	1	Pump shaft	53	1

NOTE:

- Any tapered thread plug removed during disassembly should be wrapped with sealing tape around it.
- Once any circlip with a size of 17 or less or any sealing component used in movable parts is removed, it should be replaced with a new one.

5-7-6 List of wearing parts

Transmission section					
Description	Component code	Quantity per Hydro Static Transmission (HST) unit	Applicable area	Part Catalog NPC-4949	
				Fig.	REF.
Friction plate kit	CY-192157-26100	1	PTO clutch	37	2
PTO brake shoe	CY-192157-26220	1	PTO clutch	38	4
Brake plate kit	CY-192157-36300	1	Disc brake	61	1

Hydro Static Transmission (HST) / Power pump / Gear pump section					
Description	Component code	Quantity per Hydro Static Transmission (HST) unit	Applicable area	Part Catalog NPC-4949	
				Fig.	REF.
Valve plate (for pump)	CY-168H61-29260	1	Hydro Static Transmission (HST) pump	33	18
Cylinder block CMP	CY-1A7050-25181	1	Hydro Static Transmission (HST) pump	36	2
Thrust plate	CY-192157-24620	1	Hydro Static Transmission (HST) pump	43	2
Valve plate (for motor)	CY-168HK0-29351	1	Hydro Static Transmission (HST) motor	33	19
Cylinder block CMP	CY-168HK0-29600	1	Hydro Static Transmission (HST) motor	98	2
Thrust plate	CY-168HK0-29620	1	Hydro Static Transmission (HST) motor	34	13

6. Repair

6-1 Disassembling Procedure

6-1-1 Removal from the tractor

Before removal of piping etc., wash the transmission as installed to the tractor with steam. If no steam cleaner is available, then clean, in particular, the joints with cleaning oil or appropriate solvent. Avoid a strong solvent such as thinner. Only then, disconnect all the pipes from the Hydro Static Transmission (HST). During this time, drain away the old oil from the drain port (fresh hydraulic oil will be filled into the Hydro Static Transmission (HST) after reassembly) (During the disassembly work, do not use a clean paper or shop rag or wear protective gloves. This precaution is intended to avoid ingress of dust or foreign matters.

6-1-2 Disassembling the Power Take Off (PTO)

(1) Disassembling the rear Power Take Off (PTO) assembly

1. Pull out the two (2) Snap Pins and the two (2) Washers. Then, remove the Neutral Return Spring.

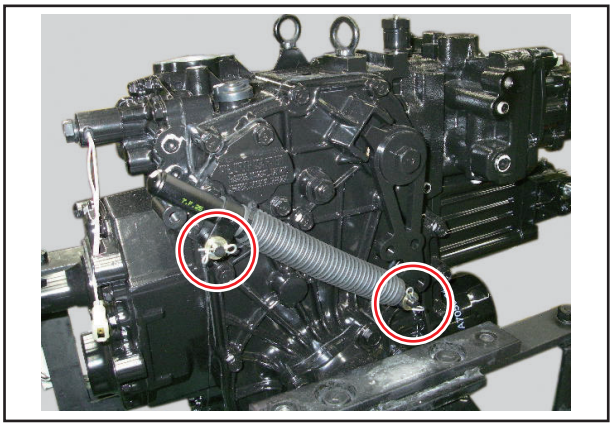

2. Equally loosen the three (3) M8 x 25 mm (L: 1.0 in.) screws to completely release the tension of the three (3) Internal Compression Springs under the Brake Cover. Remove the Power Take Off (PTO) Brake Cover.

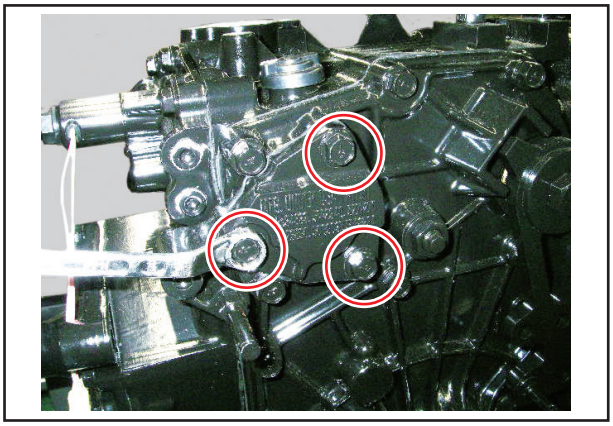

CAUTION

- Be careful of the three (3) Internal Compression Springs that may jump out.

3. Remove the Power Take Off (PTO) Brake Cover and the three (3) Compression Springs.

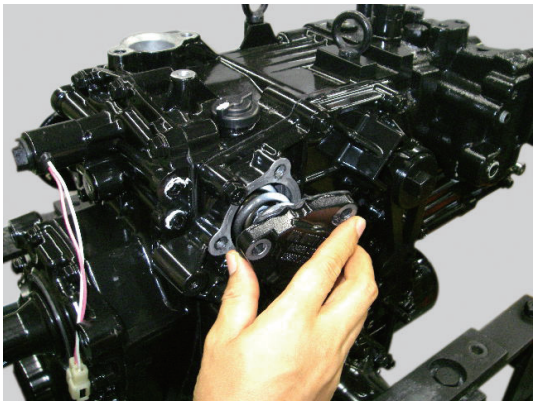

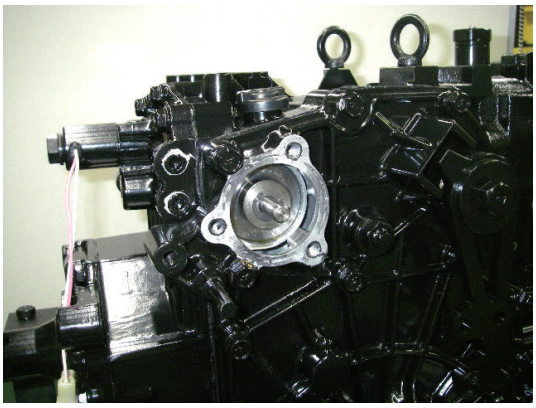

4. Remove the Rear Power Take Off (PTO) assembly while holding the Rear Power Take Off (PTO) Shaft (A) by loosening the ten (10) M8 x 30 mm (L: 1.2 in.) Bolts and four (4) M8 x 90 mm (L: 3.5 in.) Bolts (B) shown within red circles on the Rear Cover from where the Rear Power Take Off (PTO) Shaft protrudes.

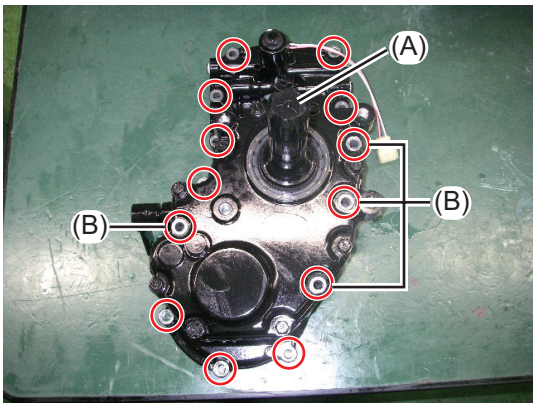

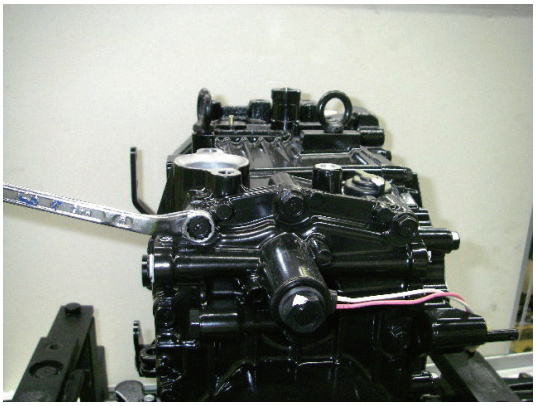

NOTE:

- To aid in separating the Rear Cover from the Trans-Axle insert a screwdriver or prybar into each of the upper and lower grooves provided on the mating surfaces of the rear cover and Trans-Axle.

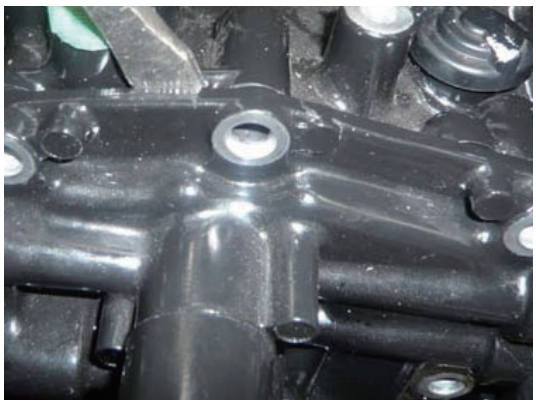



5. Disassemble the Rear Power Take Off (PTO) Assembly. Loosen the nine (9) M8 x 30 mm (L: 1.2 in.) Bolts. Then split the assembly in two. When doing so, remove the Shift Collar and Shift Fork in the (A) section.

NOTE:

- The Shift Collar is orientated with the double row of teeth facing the rear of the Tractor.

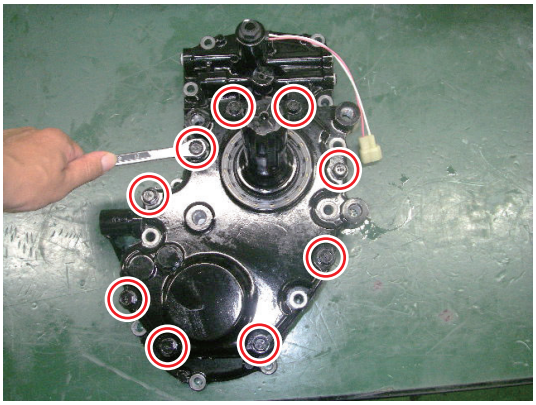

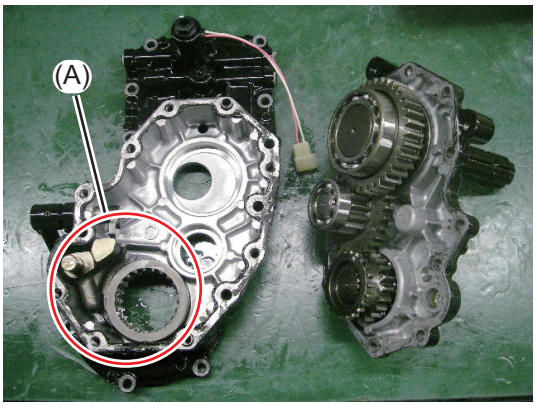

6. Remove the Spring Pin that secures the Shift Lever to the Shift Shaft. Remove the Stopper Plate by loosening the M8 x 20 mm (L: 0.8 in.) Bolt located beside it.

NOTE

- There are the two (2) Spring Pins (double type).
- The Shift Lever Arm points down toward the Transmission.

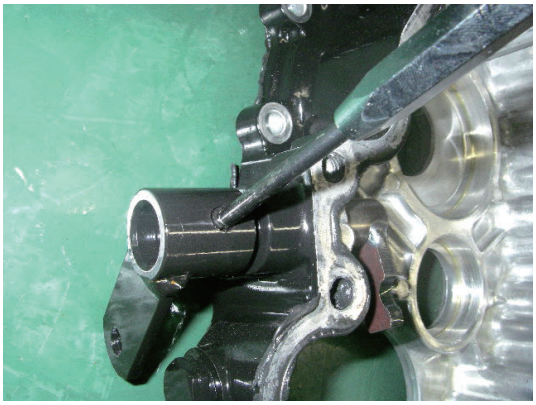

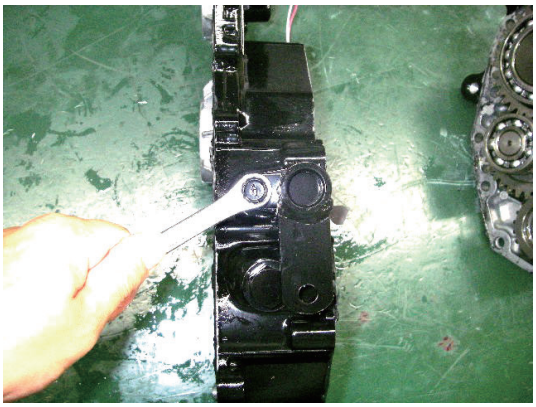

7. Remove the Shift Shaft while being careful not to damage the O-Ring (A).

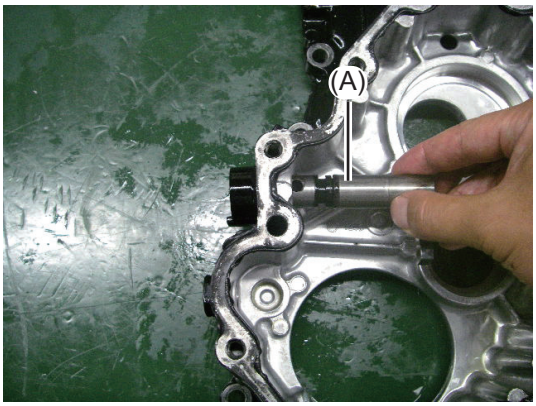

8. Disassemble the Power Take Off (PTO) Shift Fork. Remove the Shaft by tapping it with a plastic hammer. The hole (A) contains a Steel Ball and a Spring that serve as a detent.

NOTE:

- Cover the hole (A) with your finger while removing the Shaft. Carefully remove the Steel Ball and Spring.

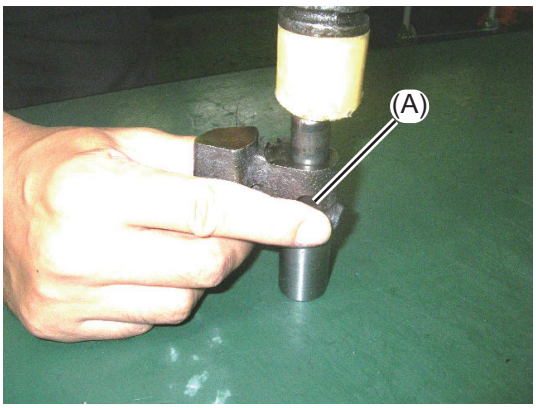

9. Subsequently, remove the Triple Gear attached to the Rear Cover.

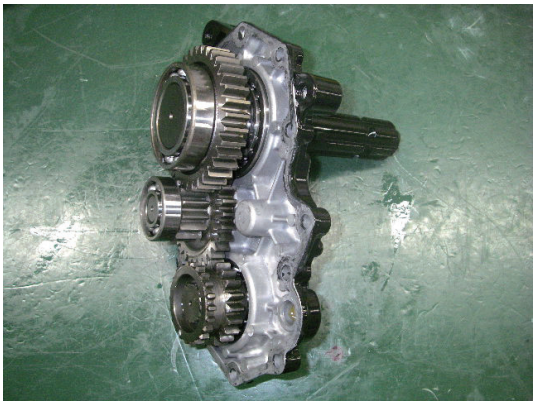

10. Remove the External Snap Ring from the lower Rear Power Take Off (PTO) Input Shaft. The 20-tooth Rear Power Take Off (PTO) Gear can be removed.

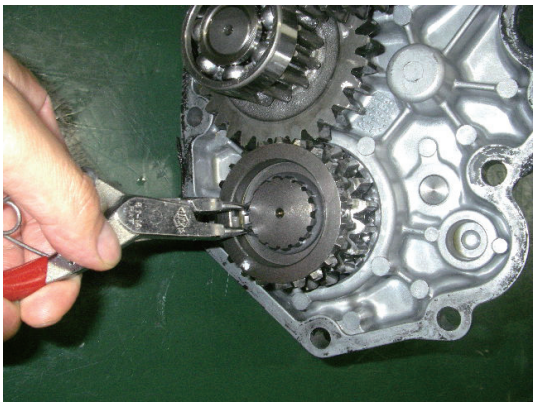

11. Remove the Bearing of the 35-tooth Upper Rear Power Take Off (PTO) Gear (A) together with the Gear (A) itself, if needing to service any of the components. Also the Center Rear Idle Gear (B) will be removed with the above assembly.

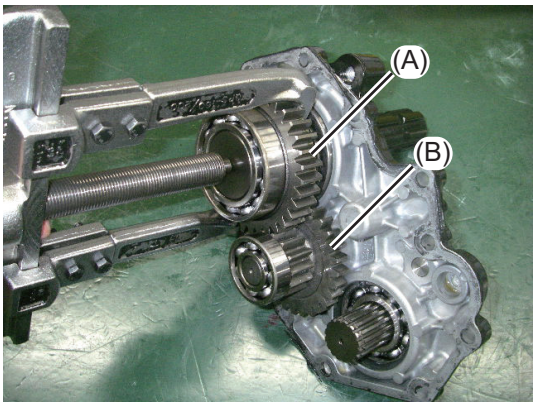

NOTE:

- The Center Rear Idle Gear (B) with the Bearing can be removed by hand from the case. The Center Idler Gear Assembly must be installed with the Power Take Off (PTO) Shaft assembly at the same time.

12. Remove the Power Take Off (PTO) Shaft while being careful not to damage the Oil Seal (A).

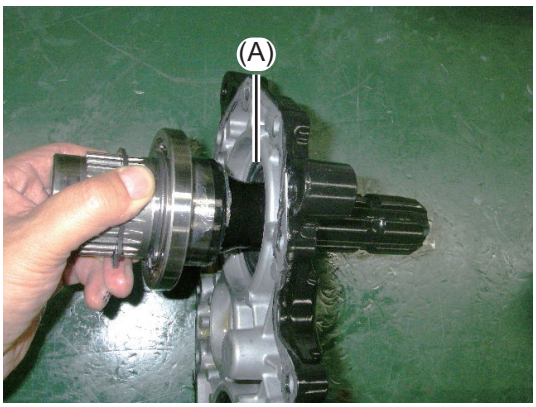

NOTE:

- The Power Take Off Shaft with the 35-tooth Upper Rear Power Take Off (PTO) Gear and Bearing can be removed as an assembly if only the seal is to be serviced. The Power Take Off Shaft Seal can be removed with a seal remover. Remove the seal by knocking it out from the outside of the housing inward. Install in reverse order.

13. Remove the lower, Internal Snap Ring (A). Remove the Rear Power Take Off (PTO) Input Shaft and the Bearing. Removing them is difficult. Use two (2) pry bars and wooden wedge to pry them out. Be careful not to damage the mating surfaces of the Case Cover Housing.



14. Disassemble the remaining Rear Power Take Off (PTO) Shaft assembly. Remove the two (2) External Snap Rings to remove the outside Bearing. Remove the outside Bearing by using a bearing puller and hydraulic press. Follow reverse procedures for reassembly.

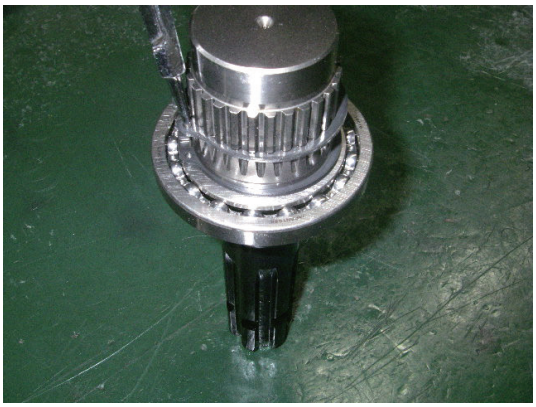

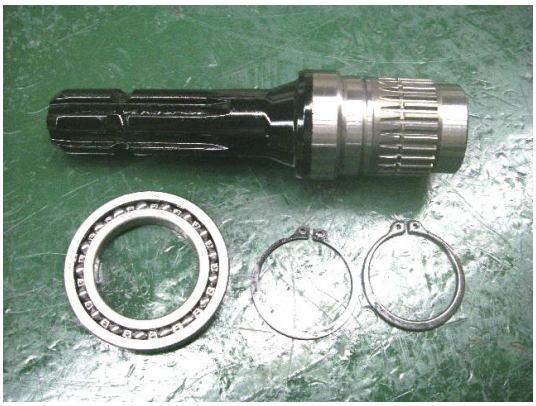

15. Disassemble the Rear Power Take Off (PTO) Idle Gear. Remove the Bearings using a bearing puller and hydraulic press. Remove the Washers and each Gear from the Splined Shaft.

NOTE:

- The Washers are located between each Bearing and Gear.

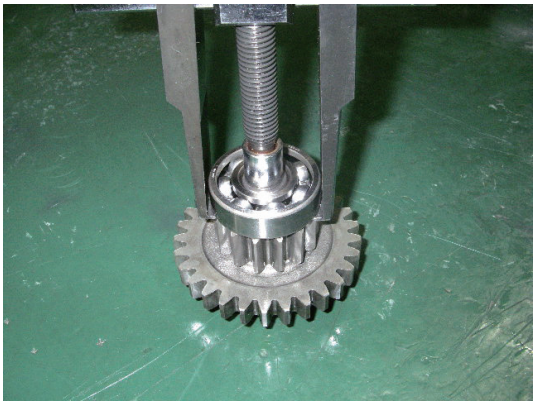



16. Disassemble the Rear Power Take Off (PTO) Input Shaft (A) and Bearings (B). Remove the Bearings using a bearing puller and hydraulic press. Install in reverse order for reassembly.

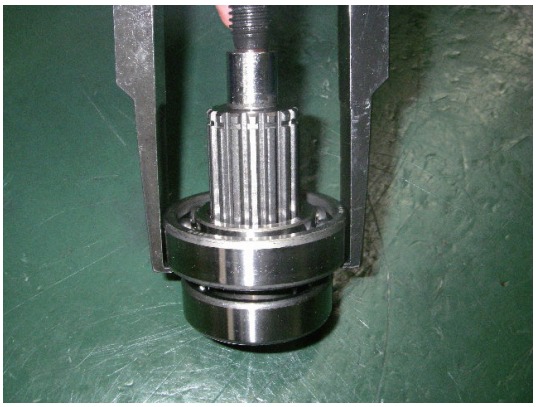

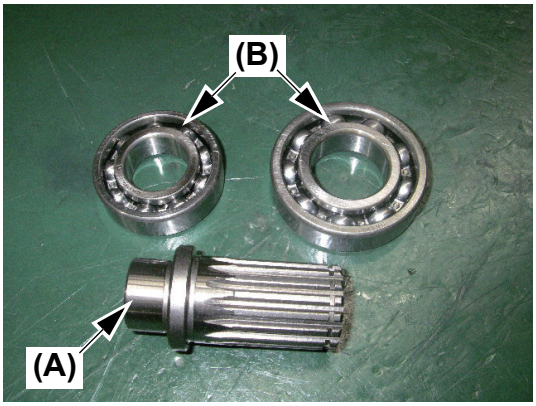

(2) Disassembling the Power Take Off (PTO) clutch solenoid valve

1. Loosen the resin (Plastic) Nut (A) to remove the O-Ring and the Solenoid assembly.

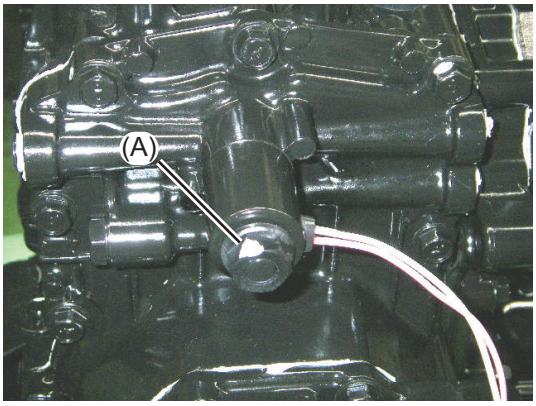

2. Loosen the armature to take out the valve and the Spring located inside the Housing Cover.

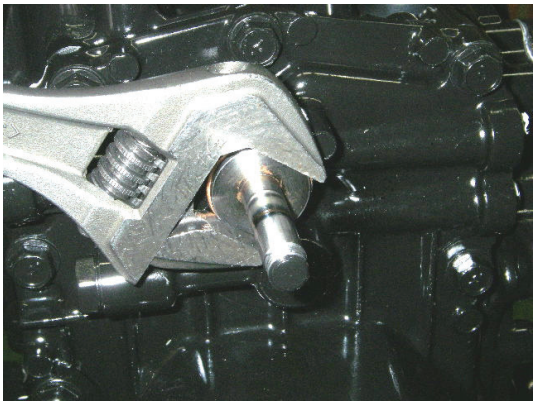

3. When removing the Spring Shim (A) in the back, be careful not to damage the bore of the rear Cover Hole. Identification of parts are shown in Figure 2. (A) Wave Washer, (B) Plastic nut, (C) O-Ring, (D) Solenoid Field Assembly, (E) Copper Gasket, (F) Armature, (G) Valve, (H) Solenoid Spring.

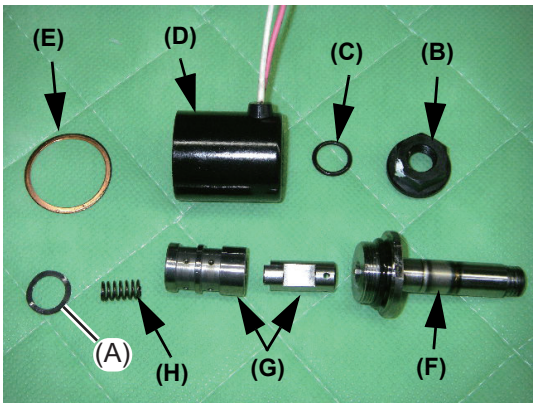

FIGURE 2

IMPORTANT

- The Armature contains the Pin (A). Be careful not to lose the Pin (A).



(3) Disassembling the Power Take Off (PTO) relief valve

Loosen the Plug and take out the Relief Valve and the Spring.

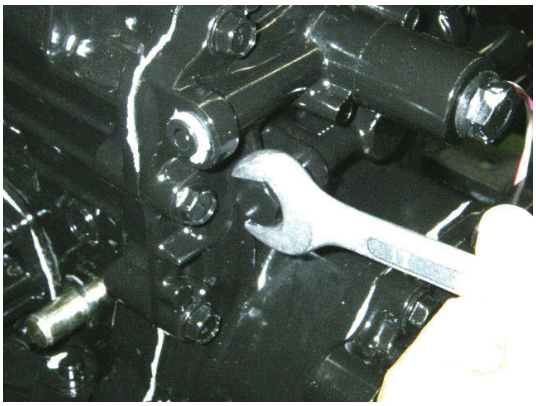

IMPORTANT

- Do not use any magnetic tool. Magnetizing any part attracts iron powder suspended in the hydraulic oil, resulting in adverse affects of functions, performance and durability.

NOTE:

- In some cases, the Adjusting Shim (A) is not used in production.
- A Shim Kit is available for adjusting the Power Take Off pressure.

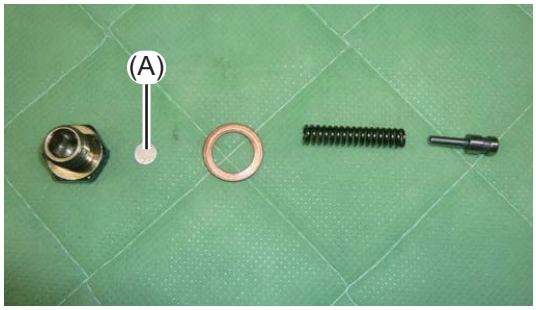

(4) Disassembling the Power Take Off (PTO) gear

1. Blow compressed air into the hole at the upper right to remove the Power Take Off (PTO) Brake Piston. If no compressed air is available, pull out the Power Take Off (PTO) Brake Piston with a pair of pliers. Be careful not to damage it.

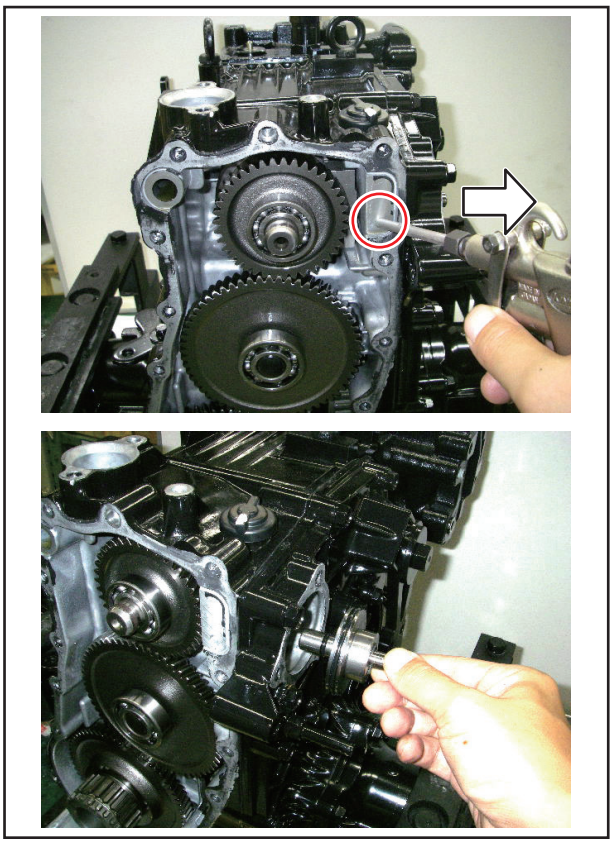

⚠ WARNING

- Be careful when using air to remove the Brake Piston. The Brake Piston can exit from the piston bore at a high speed.

2. Remove the Triple Gear. The upper two gears (i.e., the 39-tooth Clutch Gear (A) and the 61-tooth Idle Gear (B) can be easily removed by hand.

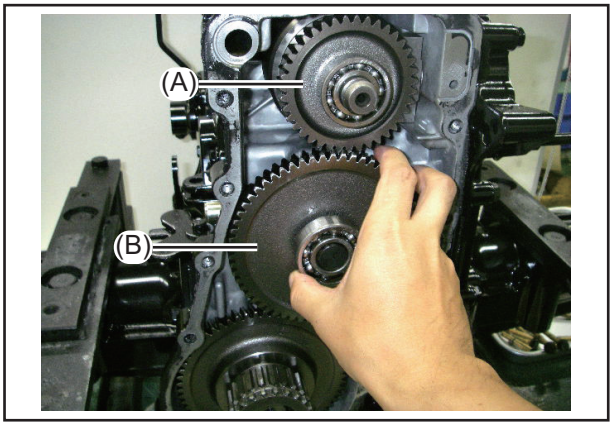

NOTE:

- Removing the 39-tooth Clutch Gear (A) causes the internal Clutch Pack to be removed with it.
- Be careful of the PTO Brake Shoe as it also comes out together with the 39-tooth Clutch Gear and internal Clutch Pack.

3. To remove the 62-tooth Power Take Off (PTO) Gear, remove the External Snap Ring.

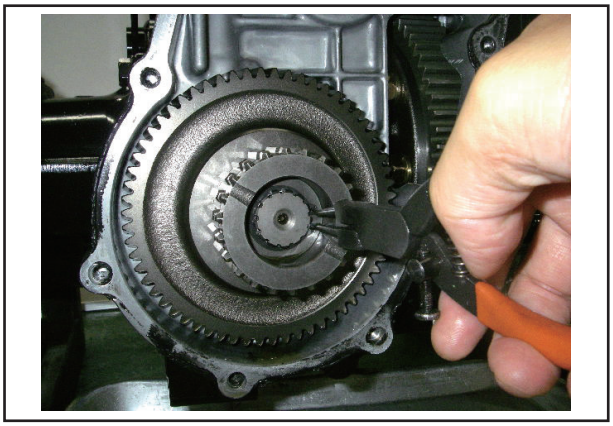

4. Remove the Splined Collar (A) located behind the 39-tooth Upper Clutch Gear.

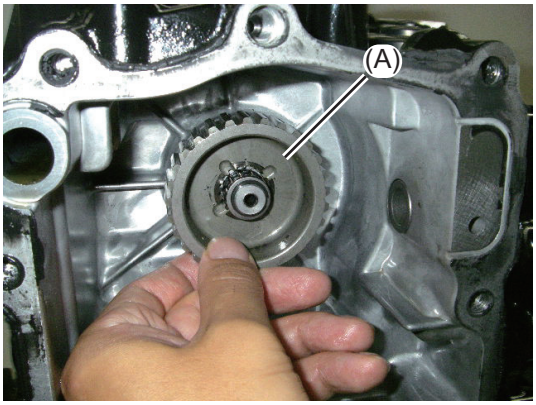

5. Disassemble the Idler Gear. Remove the Bearings from both sides. Remove the External Snap Ring from the back side of the assembly (Facing the PTO Cover). The Washer is located between the Front Bearing and Gear.



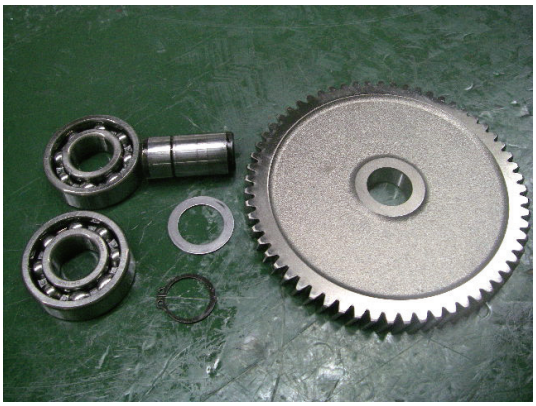

6. Disassemble the Power Take Off (PTO) Gear. Remove the External Snap Ring and then the Washer.



7. Take out the chamfered, Splined Collar (A) and the Needle Cage Bearing (B) located inside.

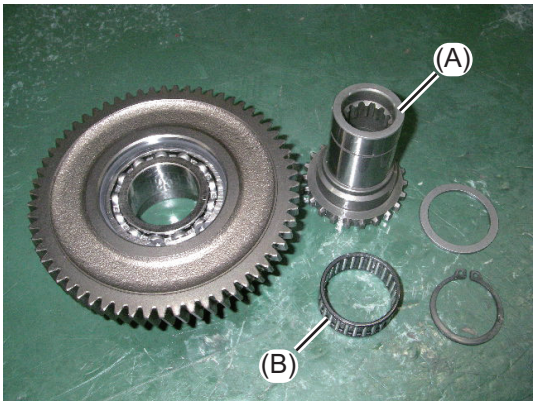

8. Remove the Internal Snap Ring and the #16007 Bearing.

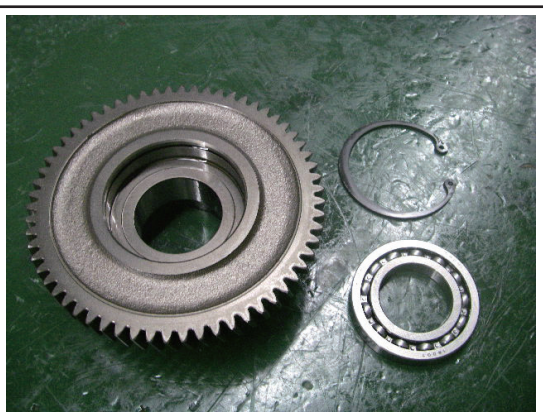

(5) Disassembling the clutch pack

1. Remove the Seal Ring (A) from the Clutch Shaft.

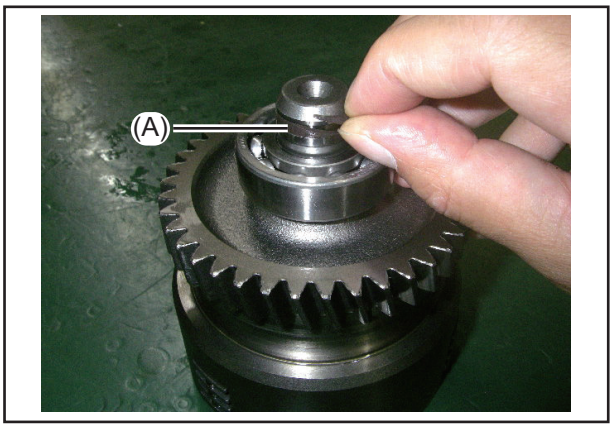

NOTE:

- Always replace the Seal Ring once removed. Never reuse a Seal Ring.

2. Use a bearing puller and hydraulic press to remove the Bearing. Then, remove the Washer.

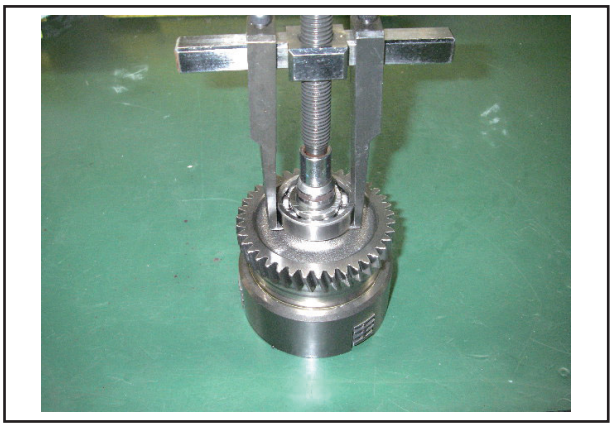

3. Turn over the Clutch Pack and remove the Internal Snap Ring.

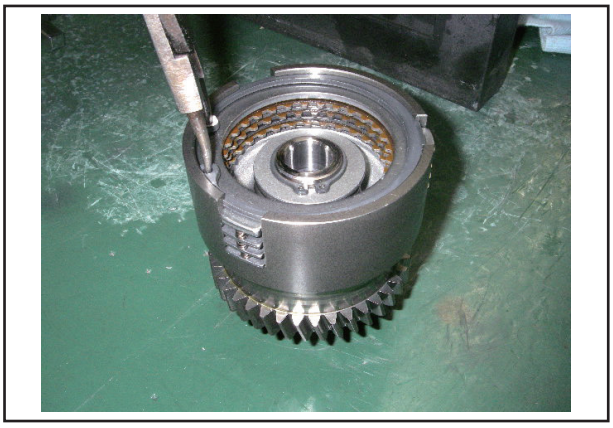

4. Remove the three (3) Friction Plates and the four (4) Steel Plates while being careful not to lose the three (3) Pins (A) and the nine (9) small Springs (B) that are attached to the Steel Plate flanges.

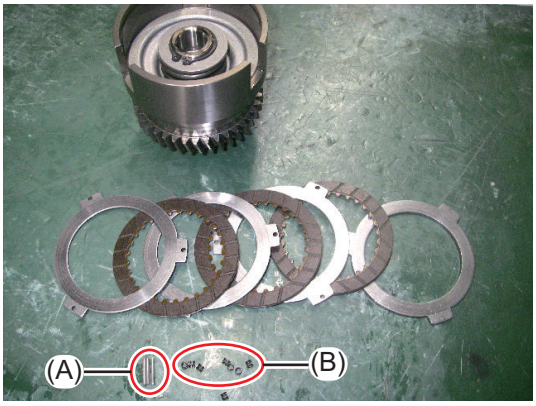

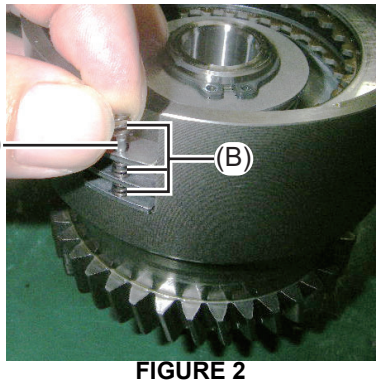

FIGURE 2

IMPORTANT

- Keep the Friction Plates, Steel Plates, Spings and Pins in the order they were removed from inside of the Clutch Gear. Figure 2 shows the orientation of the Friction Plates, Steel Plates, Springs and Pins.

NOTE:

- The nine (9) Small Springs and three (3) Pins are included in the Friction Disc Kit.

5. Depress the Piston and Center Washer using a hydraulic press and arbor tool. Depress the Piston and Center Washer enough to relieve the tension to remove the center External Snap Ring.

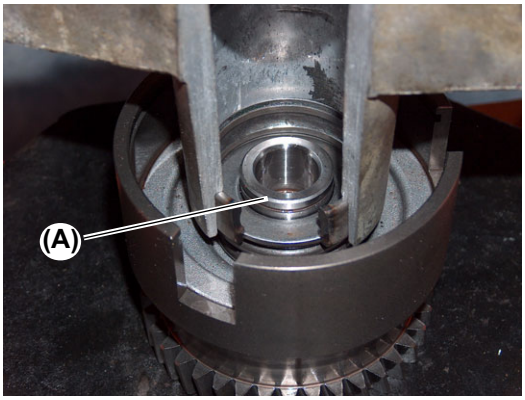

WARNING

- The Spring force is relatively strong. Therefore, be extremely careful to prevent any part from jumping out. Always wear safety glasses/goggles. This work should be performed by two technicians.

6. To remove the Piston, use compressed air. Insert air throuth the shafthole (B) to remove the Piston. If compressed air is not available, fill the cavity with hydraulic fluid and use a rod to act as a piston in the Shaft hole so as to hydraulically remove the Piston. Use a plastic hammer etc. to shock the Piston (B) while being careful not to damage any part of the assembly.

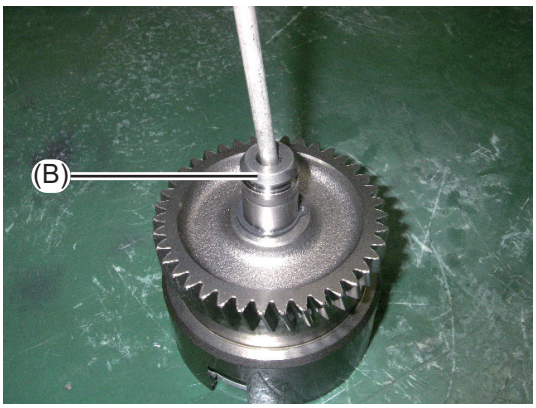

7. Remove the External Snap Ring fitted on the Shaft and pull out the Shaft. Reassemble the Clutch Pack in reverse order, paying special attention to the Friction Plates, Steel Plates, Small Springs and Pins.

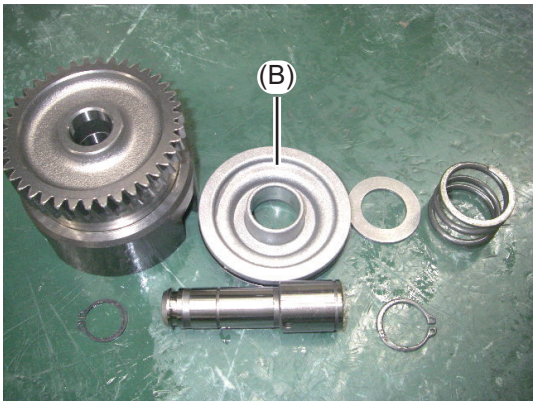

6-1-3 Disassembling the Hydro Static Transmission (HST)

(1) Disassembling the input gear box

1. Loosen and remove the one (1) M8 Bolt and the six M10 Bolts while being careful not to damage the oil seal (A).

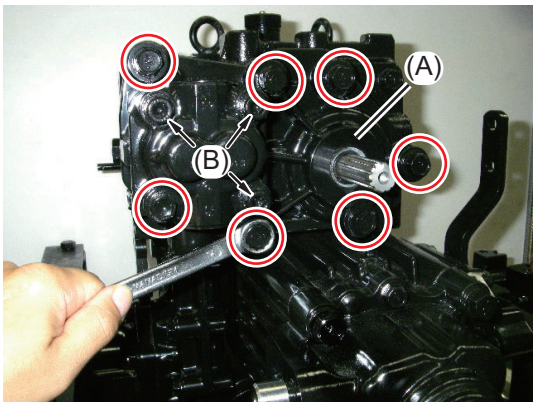

NOTE:

- Removal of the three (3) Hexagon Socket Head Cap Screws (B) is prohibited.

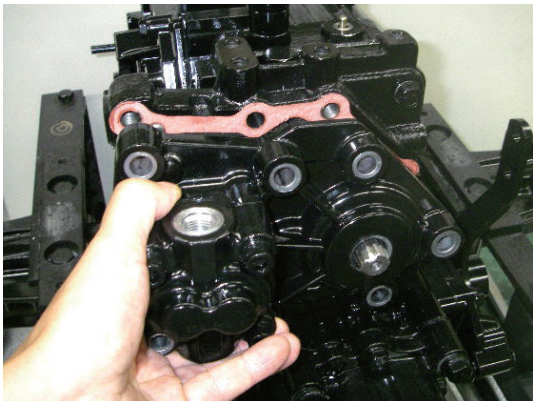

- Inserting a flat head screwdriver or prybar into each of two grooves provided on the top and side faces located at the mating surfaces of the Input Gear Box and Trans-Axle so as to use the screwdriver as a lever helps the Input Gear Box and Trans-Axle to be separated.

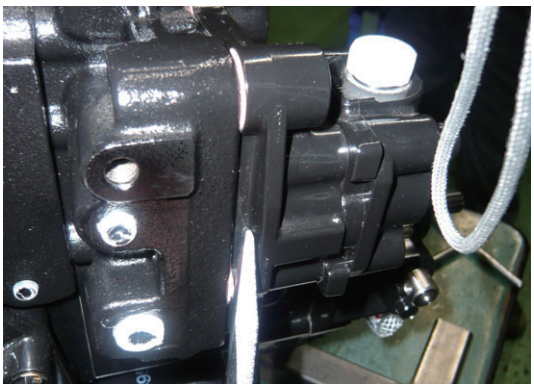



2. Remove the Triple Gear assembly. The three (3) Gears can be easily removed together with the bearing without using any tools.

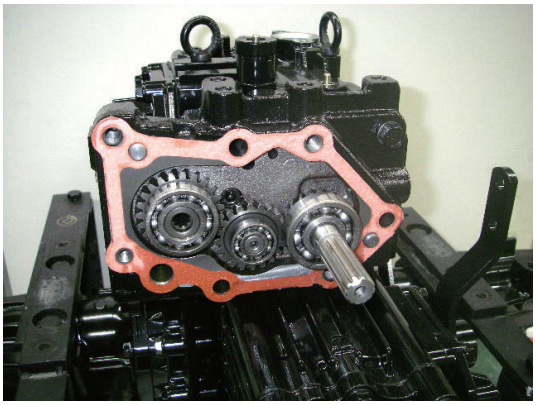

3. Remove the External Snap Ring.

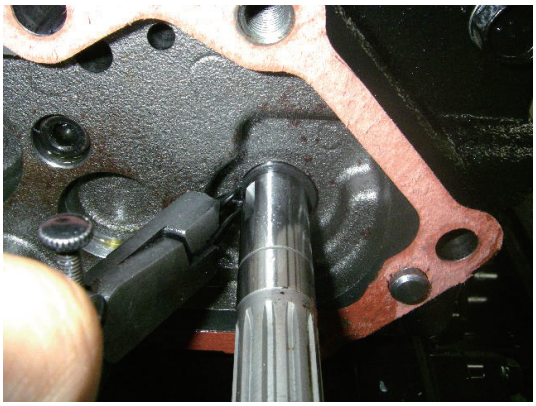

4. Remove the M10 x 105 mm (L: 4.1 in.) Bolt (A) and the M8 x 50 mm (L: 2.0 in.) Hex Screw (B) and remove the Power Pump Body.

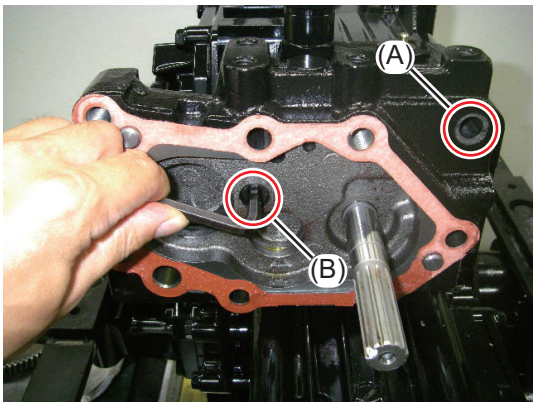

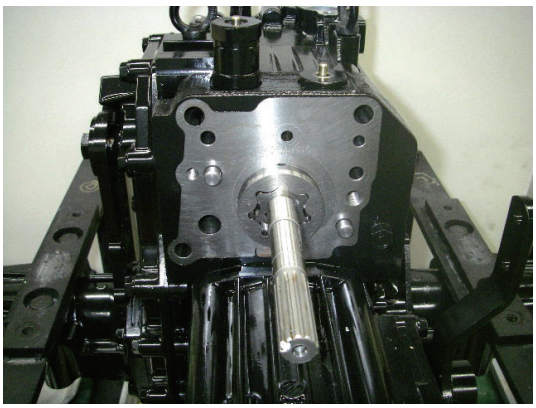

STOP **IMPORTANT**

- When the Bolt (B) is removed, the Seal Washer can be seen inside.

5. Remove the Trochoid Pump and take out the 8 x 3.2 Woodruff Key (A).

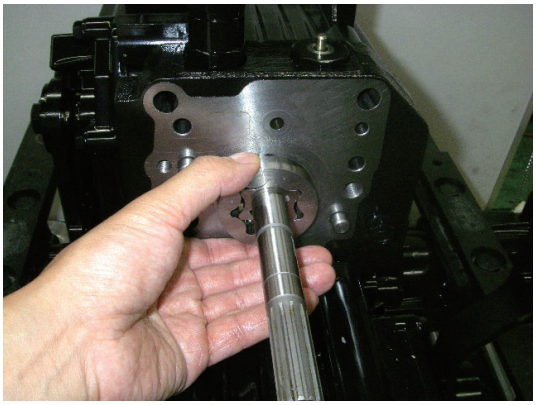

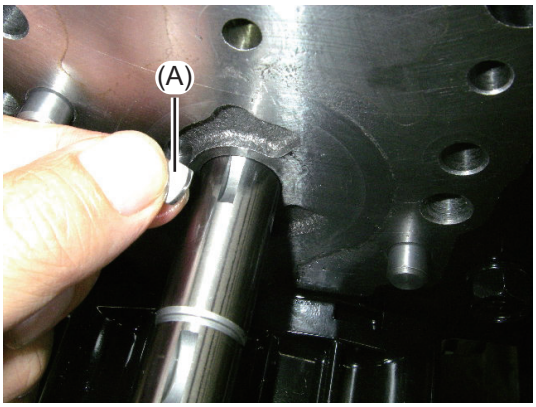

(2) Disassembling the Hydro Static Transmission (HST) pump

1. Loosen the five (5) M10 Bolts. Remove the Center Case while being careful that the Input Shaft (A) does not damage the oil seal.

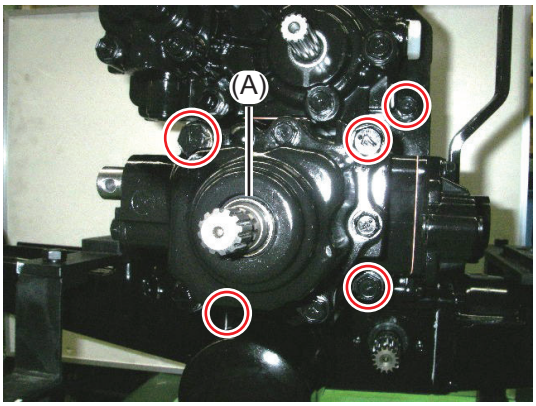

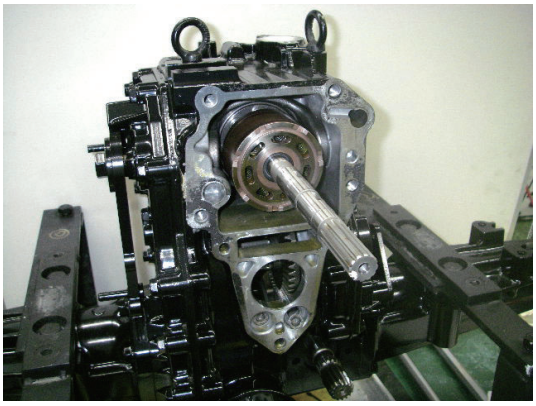

NOTE:

- The Center Case is very heavy. Be extremely careful when removing it.

2. Remove the Cylinder Block. The Cylinder Block can be easily taken out by hand. Be careful that the Pistons do not slide out of the Cylinder Block.

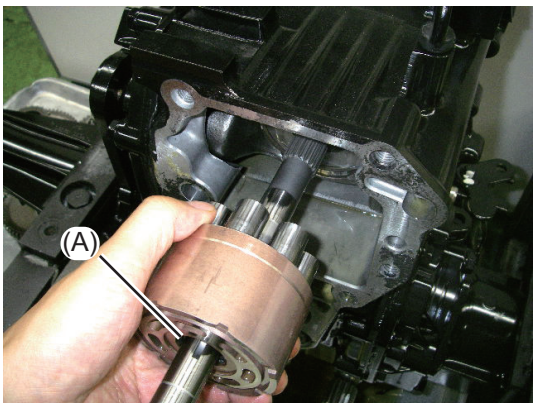

IMPORTANT

- Be careful not to damage the portion (A) of the Cylinder Block. Damaging the portion (A) of the Cylinder Block causes loss of power.

3. Remove the External Snap Ring of the Pump Shaft and the Washer behind the External Snap Ring from the Power Take Off (PTO) side (behind the Transmission). This allows the Pump Shaft to be pulled out toward the Hydro Static Transmission (HST). The Needle Bearing (A) at the end of the Input Shaft can be taken out by removing the External Snap Ring.

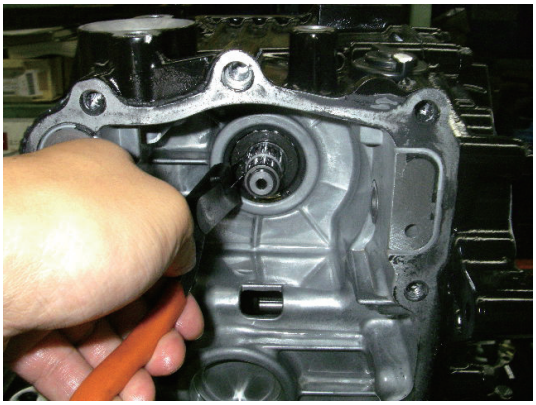

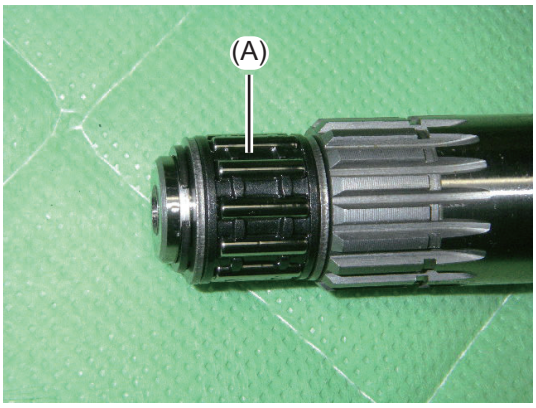

4. Remove the Thrust Plate (B), the Thrust Bearing (A) and the Washer from the surface (in front of the Transmission) mating with the Hydro Static Transmission (HST).

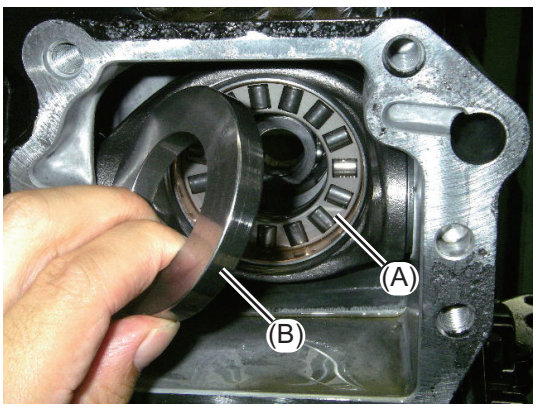

NOTE:

- The Washer positioned at the front of the Pump Shaft Bearing is different in size from the washer positioned at the rear of the Pump Shaft Bearing.

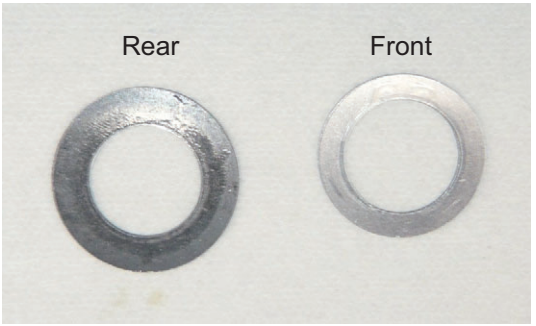

5. Remove the two (2) Strainers (A) from the surface mating with the Hydro Static Transmission (HST).

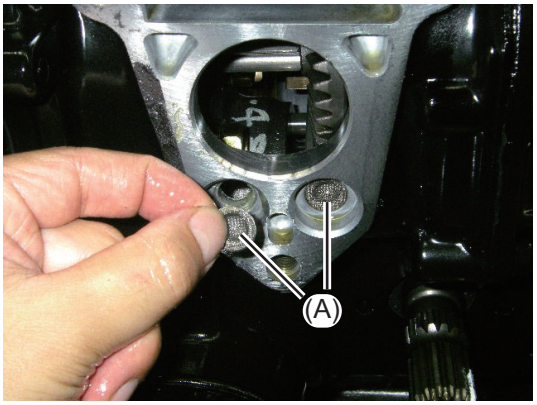

(3) Disassembling the center case

1. Remove the Valve Plate (A), two (2) Locating Pins (B) (for the Plate), Locating Pin (C) (for the Center Case), two (2) Check Valves (D) and the packing on the mating surface from the Center Case.

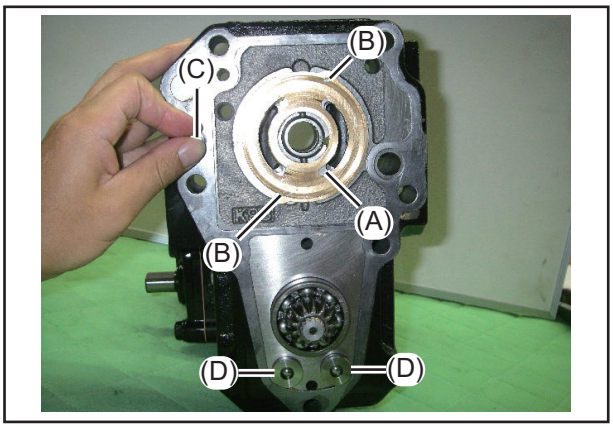

IMPORTANT

- Be careful not to damage the Valve Plate. Damaging the Valve Plate causes power loss.
- Pry out the two (2) Check Valves (D) with the help of a flat bladed screwdriver or pry bar.

2. Remove the 12 x 1.6 Circlip (C-ring) and take out the 13-tooth Pinion Gear (A) and Bearing (B).

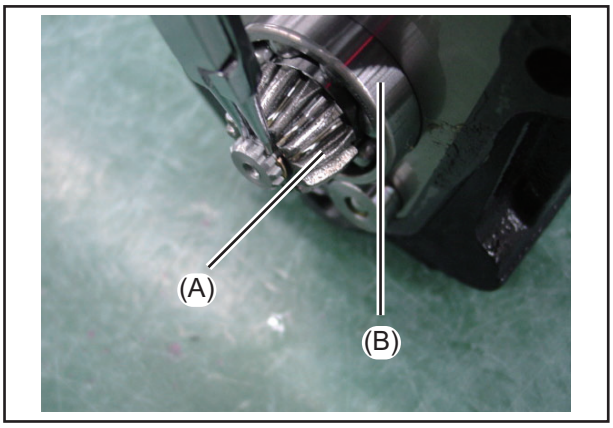

NOTE:

- The 12 x 1.6 Circlip (C-ring) should not be reused.

3. Remove the M10 Jam Nut (A) and the 10 x 20 Set Screw (B) behind the sub-shift lever. Then pull the lever (C) off of the Shaft.

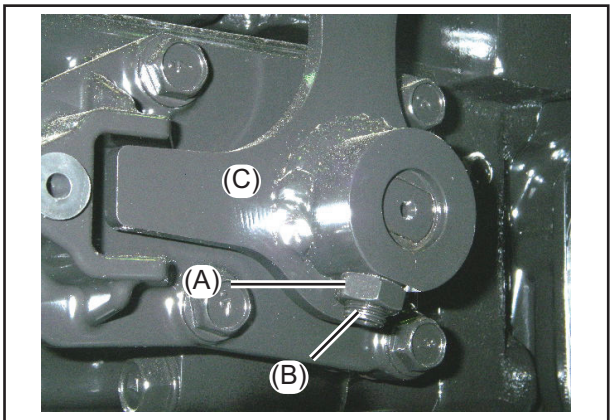

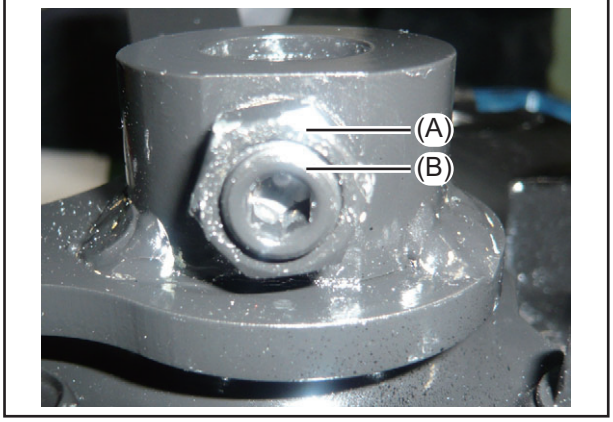

4. Loosen the four (4) Bolts (three M10 and one (1) M8 Bolt) so as to separate the Front Drive Case.

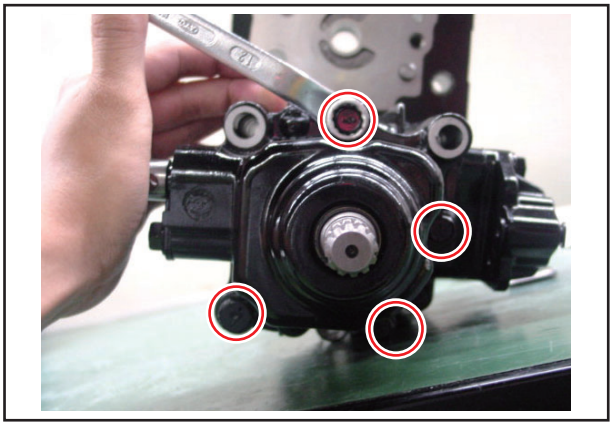

5. Remove the Splined Collar (A) and the Spacer (B). The Splined Collar is installed with the raised portion of the teeth facing the Spacer.

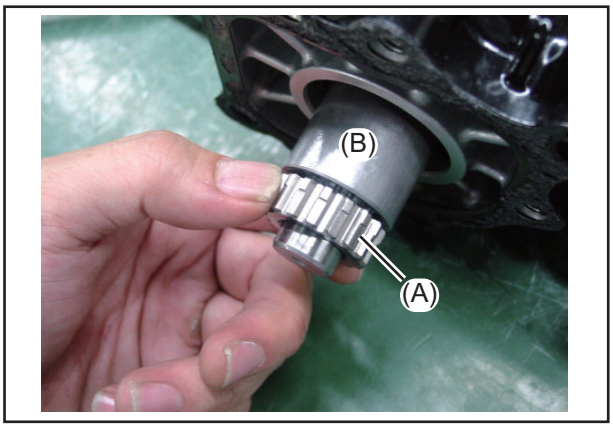

6. Pull out the two (2) Locating Pins (A) from the Front Drive Case.

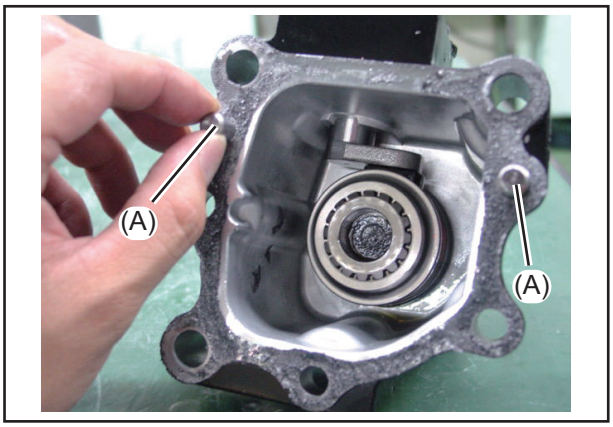

7. Remove the M8 x 16 mm (L: 0.6 in.) screw (A) and the Keeper Plate (B) on the side. Pull out the Shift Shaft (D) for easy removal of the Front Drive Shaft (C).

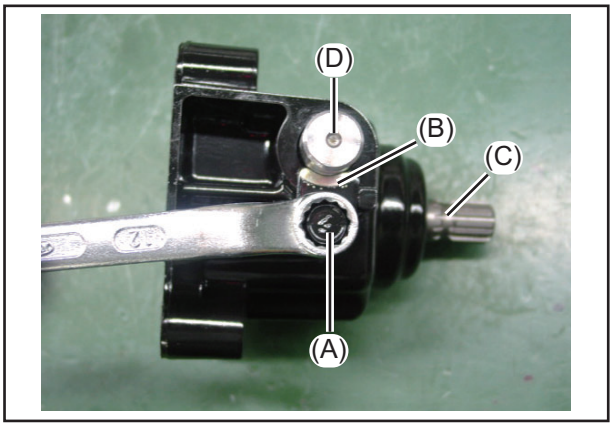

8. While holding the Front Drive Case, remove the Front Drive Shaft by lightly tapping the end of the Drive Shaft against a table etc.



9. Disassemble the Front Drive Shaft. Remove the Shift Collar (A) and take the Detent Spring (B) and the two (2) Steel Balls (C) out of the inside.

WARNING

- Wear safety glasses/goggles etc. during this activity. The two (2) Steel Balls (C) will fly out when the Shift Collar (A) is slid about 15 mm from the Bearing (D).

IMPORTANT

- In order to prevent the two (2) Steel Balls (C), which would otherwise vertically fly out, from being lost, cover with clean paper towel or shop rag during this activity.

10. Pull out the Bearing (D) and the Sleeve (E).

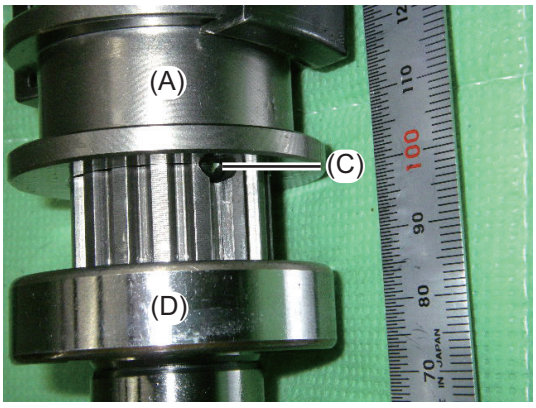

(C) Shift Collar
(D) Detent Spring
(E) Steel Balls
(F) Bearing
(G) Sleeve

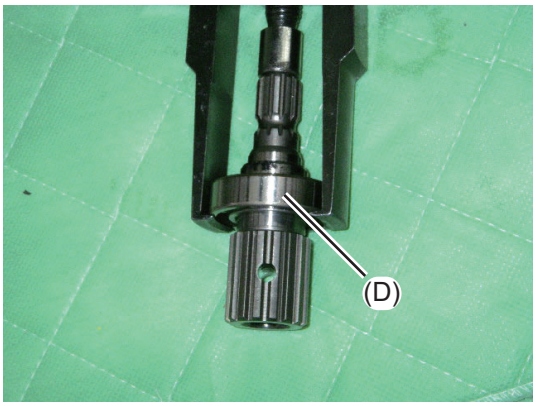

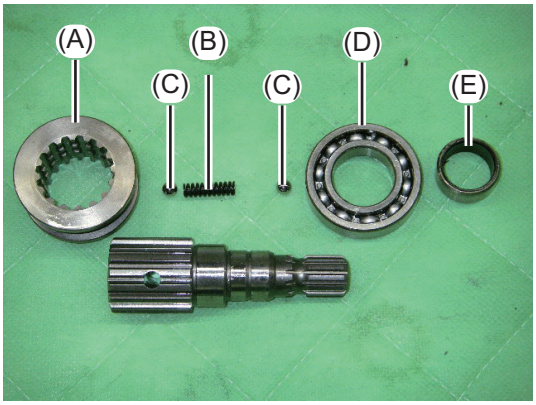

11. Remove the Washer (A), Oil Seal (B), Shift Shaft (C) and Shift Block (D) from the Case. Remove the Gasket material from the mating surface.

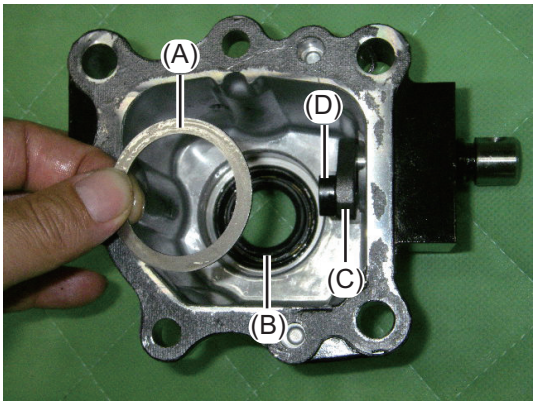

IMPORTANT

- Once removed, the Oil Seal (B) should be replaced with a new one.

NOTE:

- Be careful not to damage the mating surface.

12. Loosen the one (1) M10 x 105 mm (L: 4.1 in.) Bolt to remove the Motor Case from the Center Plate.

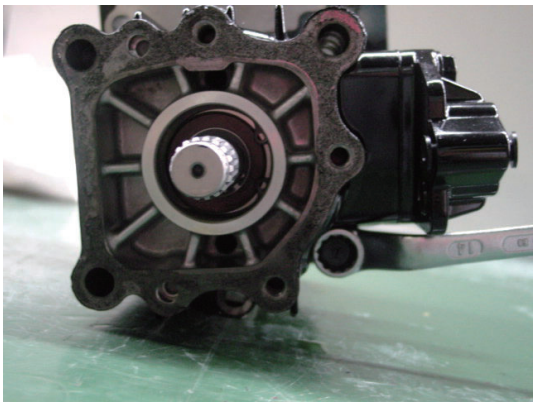

NOTE:

- Remove the Gasket material remaining on the Motor Case.

13. Take out the Cylinder Block (A) of the Hydro Static Transmission (HST) Pump from the inside.

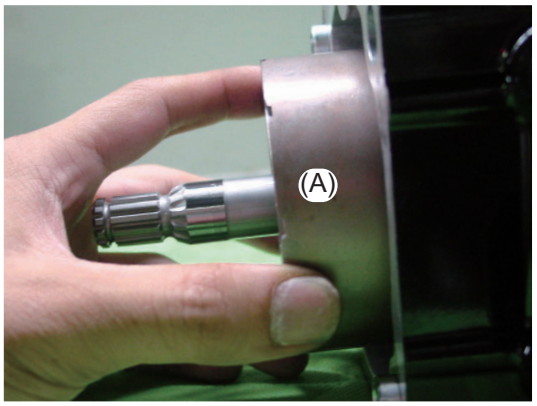

NOTE:

- Take out the Cylinder Block (A) while slightly tilting it toward you so that the Pistons do not slide out of the Cylinder.

14.Pull out the Piston (C) together with the Plate (B) from the Cylinder Block (A).

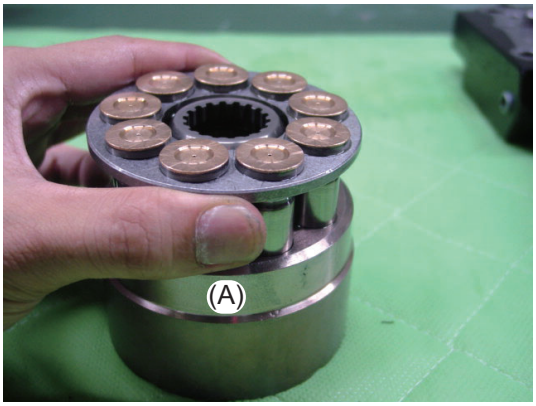

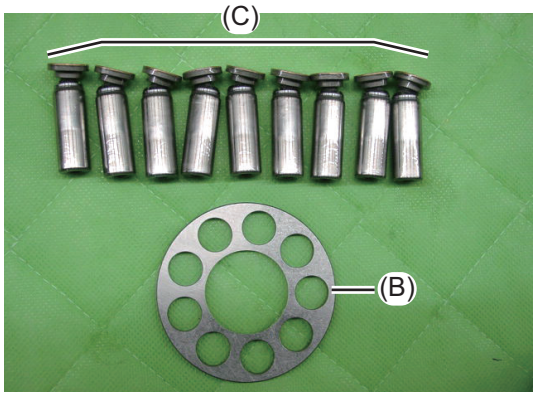

IMPORTANT

- Be careful not to damage the contact face (located at the bottom in the photo) of the Cylinder Block (A). Damaging the contact face causes power loss.

NOTE:

- The Pistons always need to be replaced into the Cylinder bores from where they were removed.

15.Pull out the Cylinder Block Retainer Guide (A) and the six (6) Pins (B).

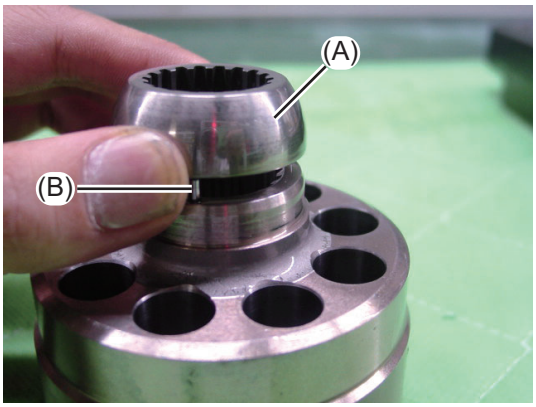

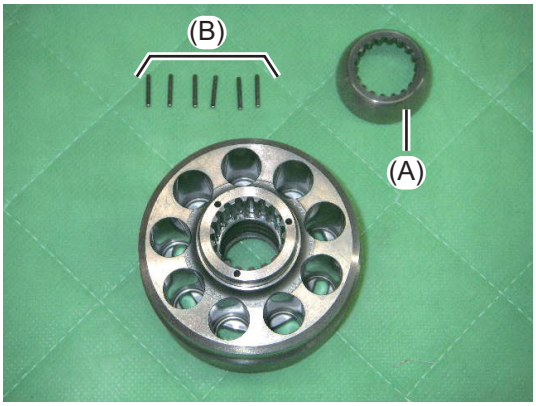

IMPORTANT

- Each of the three (3) holes contains two (2) Pins (B).

16. Remove the Swash Plate (A) and the Thrust Plate (B).

NOTE:

● The heavily chamfered side of the Thrust Plate faces the Swash Plate.

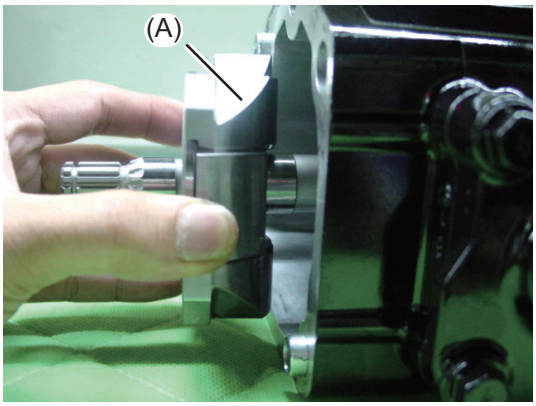

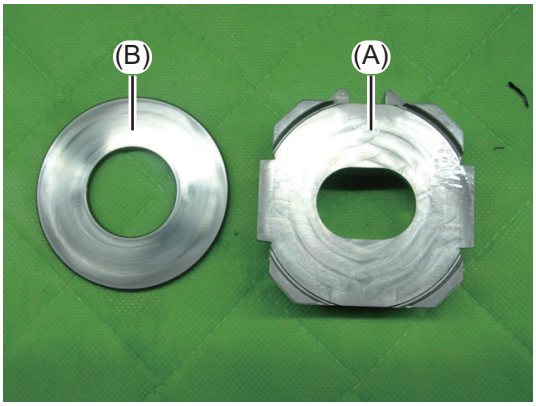

17. Remove the two (2) Swash Plate Thrust Bearings (A).

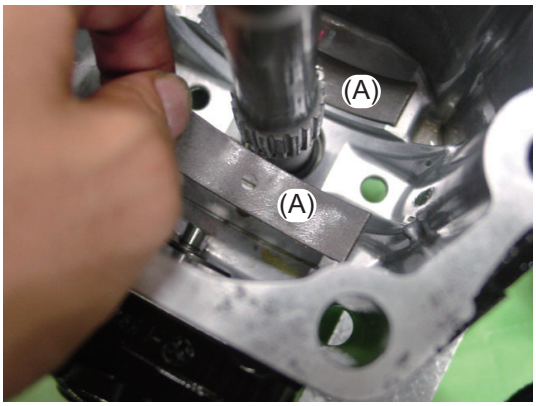

18. Remove the Internal Snap Ring. Remove the Motor Shaft (A) by tapping it with a plastic hammer.

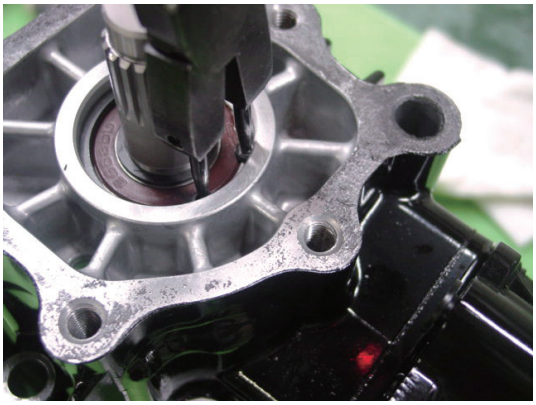

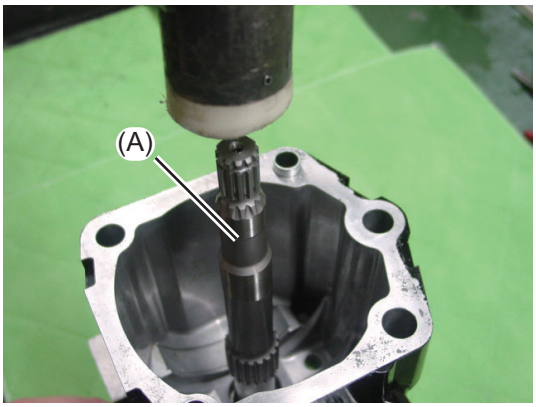

19. Remove the External Snap Ring from the Motor Shaft. Use a bearing puller to remove the Bearing from the Motor Shaft.

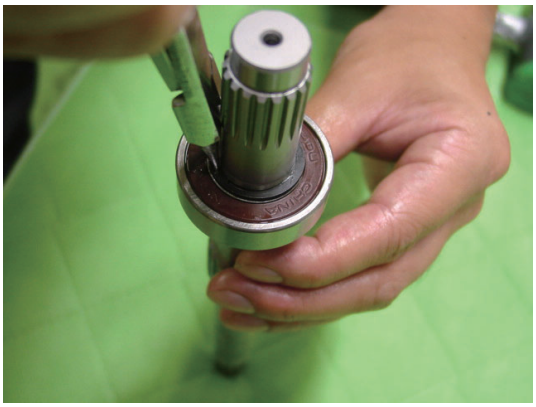

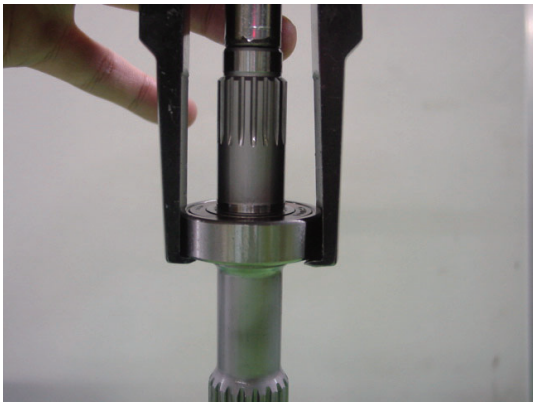

20. Loosen the four (4) M8 x 30 mm Bolts and remove the Side Cover.



21. Remove the External Snap Ring. Remove the Washer (A) and the Control Arm (B) while being careful not to damage the Oil Seal.

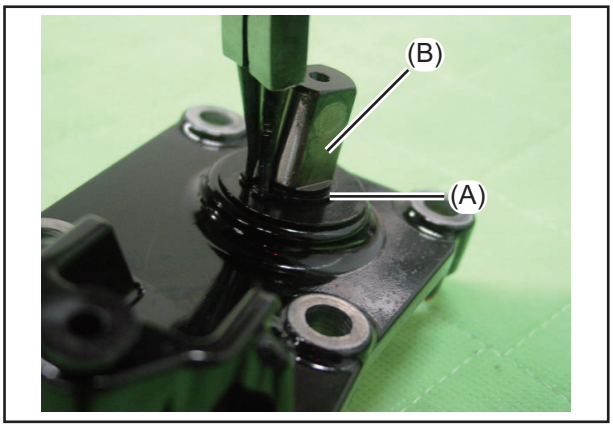

(4) Disassembling the valve

1. Disassemble the Valve from the Pump Body. Remove the Reduction Valve Plug on the left side.

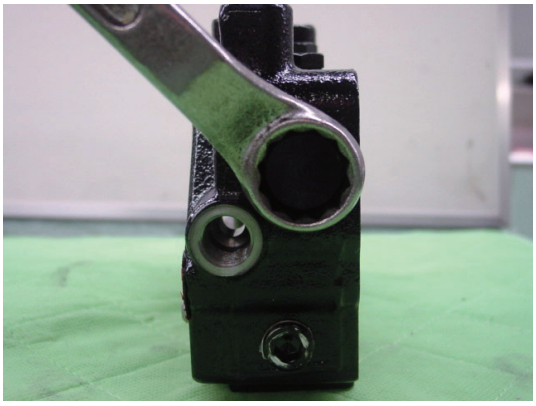

2. Remove the O-Ring (A), Spring (B) and Valve (C) from the inside while being careful not to damage the Valve (C).

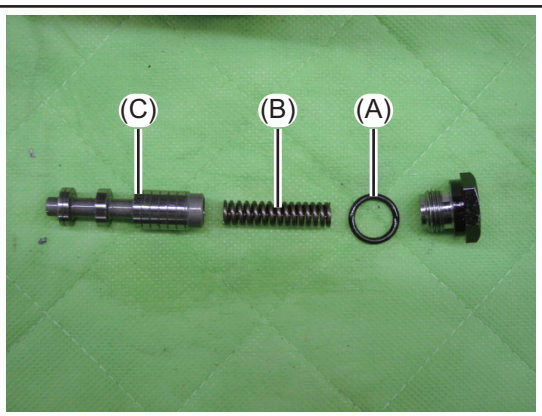

3. Disassemble the Pressure Valve. This Valve is located at the upper center of the Pump Body. The Plug on the right side is for blocking the drilled hole.



4. Take out the O-Ring (A), Spring (B) and Resistance Valve (C) from the inside. Be careful not to damage the Valve (C) as well.

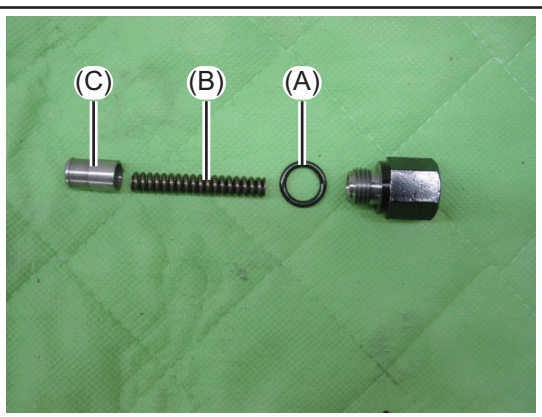

5. Disassemble the Tow Relief Valve (Forward Valve) (A) and the Check Valve (Reverse Valve) (B) on the top of the Center Case.

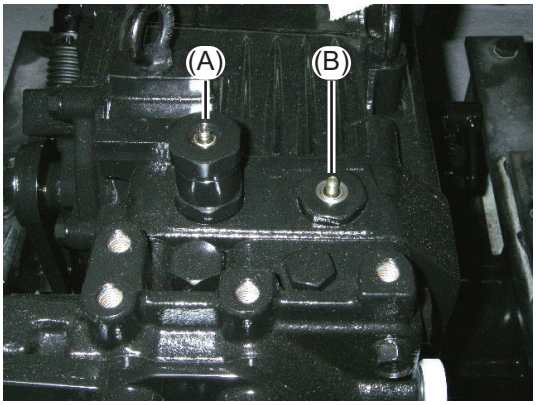

NOTE:

- The taller valve is the Tow Relief Valve and the shorter valve is the Reverse Valve.

6. Loosen both Valves with an adjustable wrench to remove them. Since the Check Valves have a less allowance for tool engagement, be careful about tool slippage.

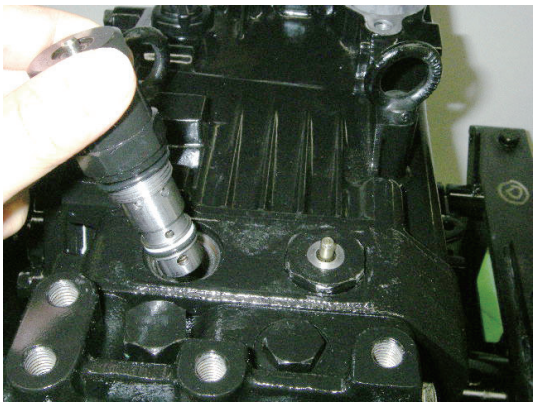

7. Be careful not to damage the O-Ring (Black) (A) and the Backup Ring (White) (B).

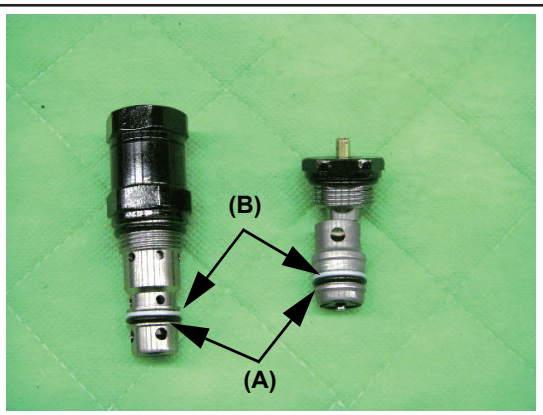

STOP **IMPORTANT**

- Disassembling the Tow Valve or Check Valve is limited to removal of the O-Ring and Backup Ring. Failure to do so causes the warranty to be voided.

6-1-4 Disassembling the transaxle

(1) Disassembling the axle case

1. Remove the Oil Filter. Use an oil filter wrench for removal.

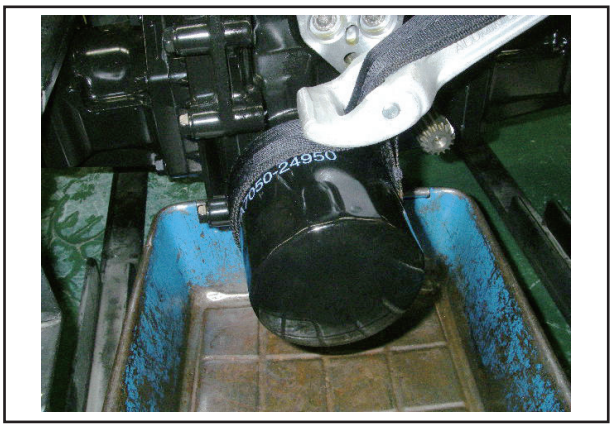

NOTE:

- If the Oil Filter is deformed, replace it with a new one even before the time of replacement.

2. Remove the Control Arm (A). Loosen the M14 x 30 mm (L: 1.2 in.) Bolt and remove it together with the washer (B).

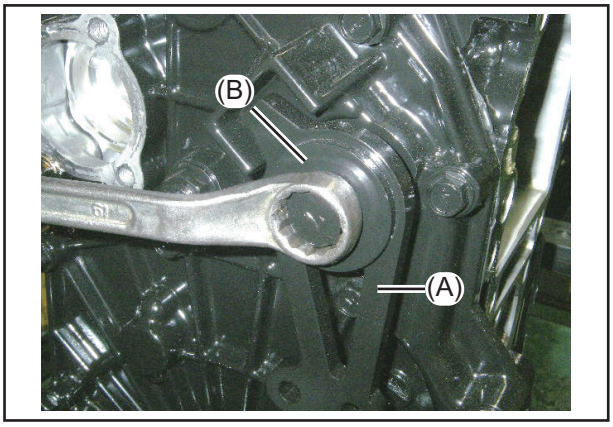

3. Remove the Axle Shaft. Loosen the six (6) M10 x 35 mm (L: 1.4 in.) Bolts (on the right and left sides).

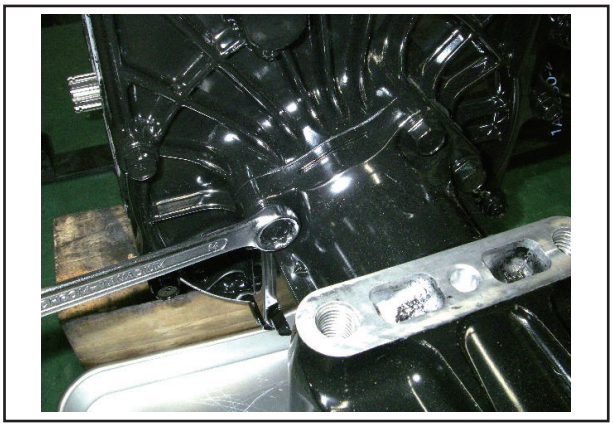

4. Tap the flange section of the Axle with a plastic hammer for removal.

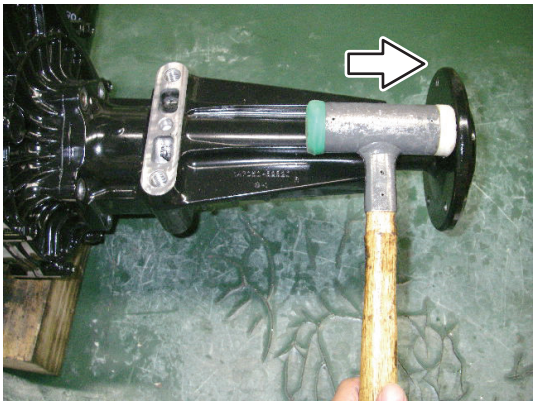

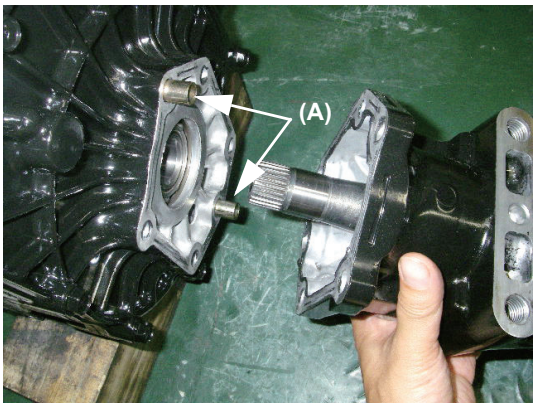

IMPORTANT

- There are the two (2) Collars (A) used as Locating Pins. Remember to remove them (on the right and left sides).

5. Remove the Internal Snap Ring 55 that holds the seal in the Axle Housing.

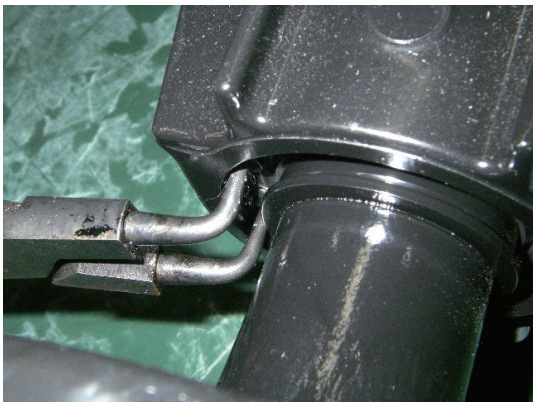

6. While holding the Axle Case, remove the Axle Shaft by slamming the Axle Shaft end against a solid object, (Wood Block on the floor).

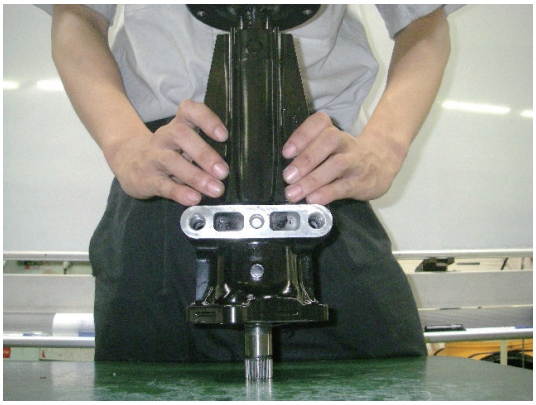



7. Remove the External Snap Ring 29 from the Axle Shaft and slightly move the Oil Seal toward the flange section of the Axle Shaft.





8. Use a bearing puller and gear puller to remove the Bearing from the Axle Shaft (on the right and left sides).

NOTE:

●Figure 2 shows the orientation of the Seal and Bearing assembly for the Axle Shaft.

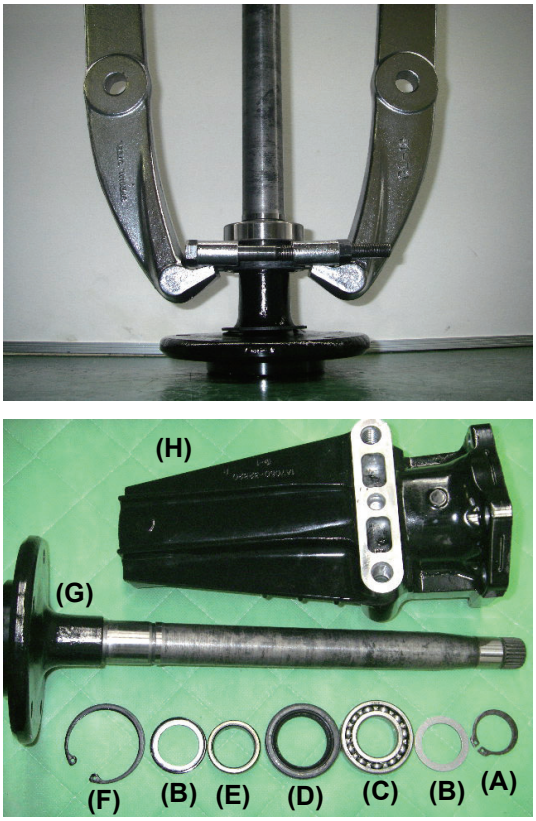

FIGURE 2

(2) Disassembling the transmission

1. Loosen the sixteen (16) M8 x 40 mm (L: 1.6 in.) Bolts and remove the Transmission Case cover together with the right Swash Plate (A).

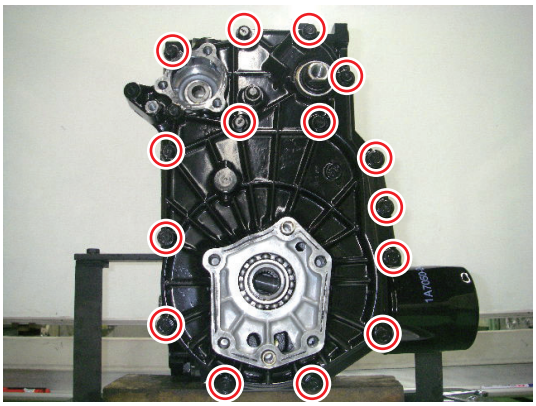

NOTE:

●Number the holes on the Plate and Bolts.

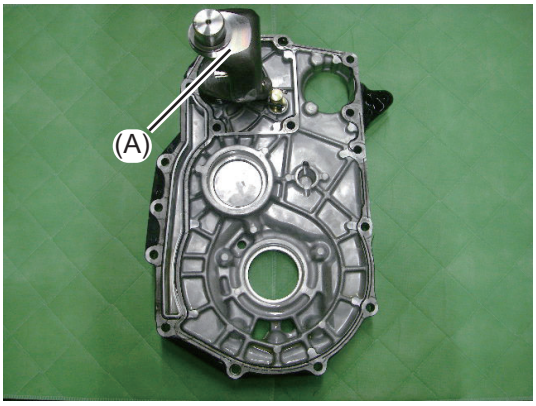

2. To make neutral adjustment of the Hydro Static Transmission (HST) easy during reassembling work, mark the position of the M12 Nut (A) and Eccentric Fulcrum with white paint etc. Remove the M12 Nut (A) and Washer.

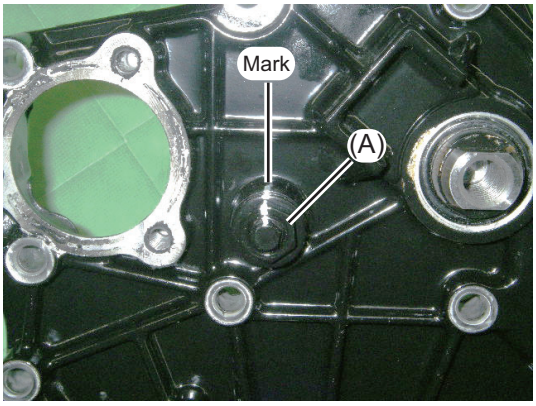

3. In order to remove the Swash Plate (Trunnion), remove the External Snap Ring 28 and Washer.

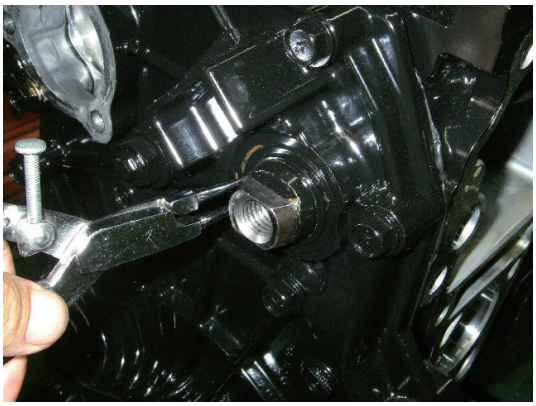

4. Gradually pull out the Swash Plate (Trunnion) and the Eccentric Fulcrum (B).

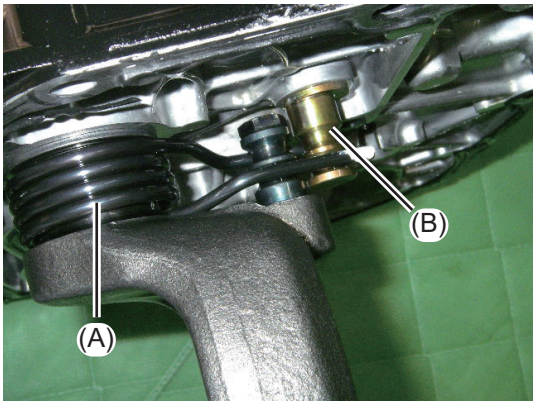

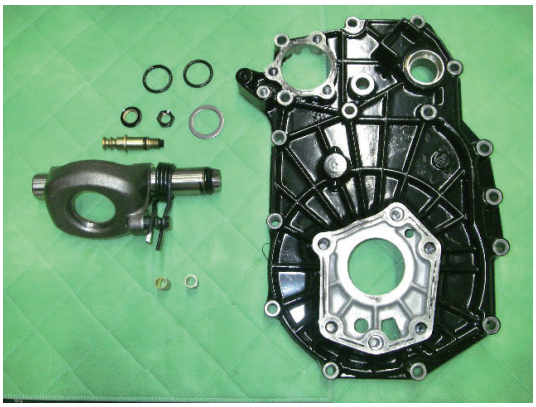

5. When removing the Spring of the Swash Plate, secure the Swash Plate with a vise and use a ring spanner, pipe or box end wrench to gradually remove the Spring.

⚠ CAUTION

- Wear eye glasses/goggles and gloves during this activity.

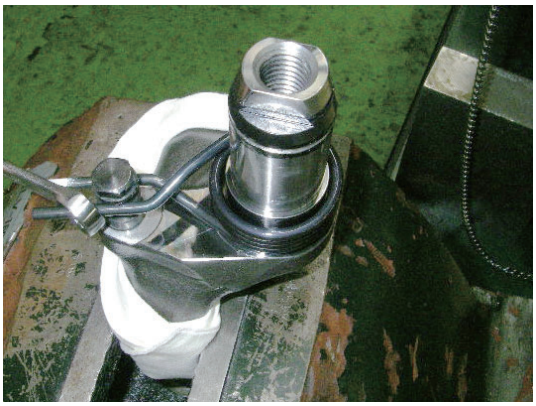

6. Disassemble the gear train. First remove the bearing (A). It can be easily pulled out by hand.

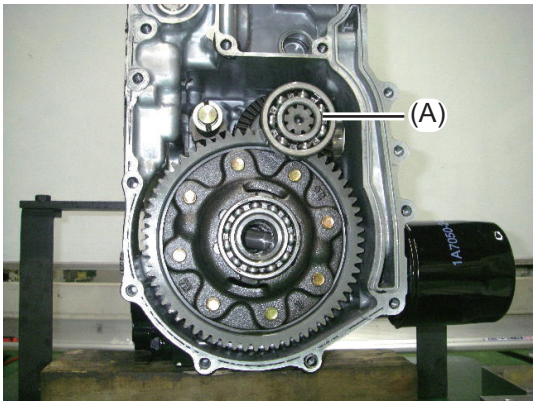

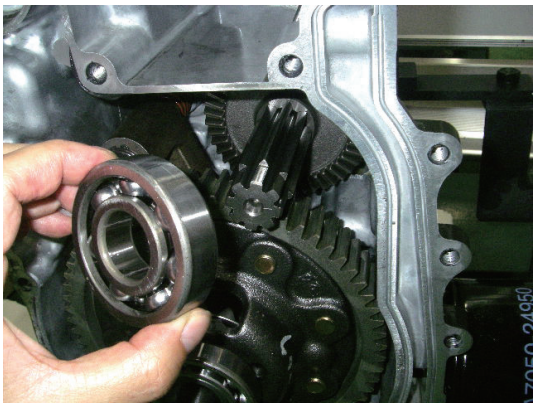

7. Evenly pull out the Differential Case (A) and Differential Lock Fork (B). If it is difficult to pull out , request another technician to tap the Bearing (C) from the opposite side of the Transmission Case.

⚠ WARNING

- The Differential Case is heavy. It weighs about 15 lbs (7 kg). Therefore, working with your hand placed between the Differential Case and the Transmission Case or a workbench may cause your hand to be pinched between them. Be extremely careful about your hand position.

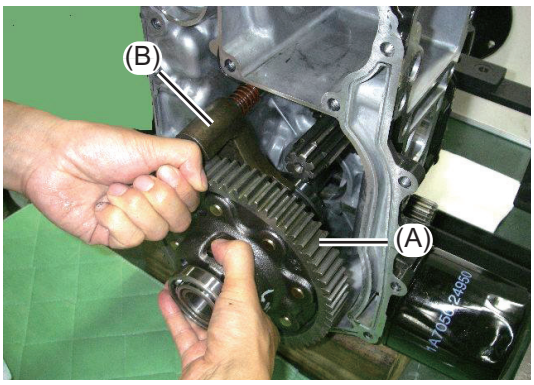

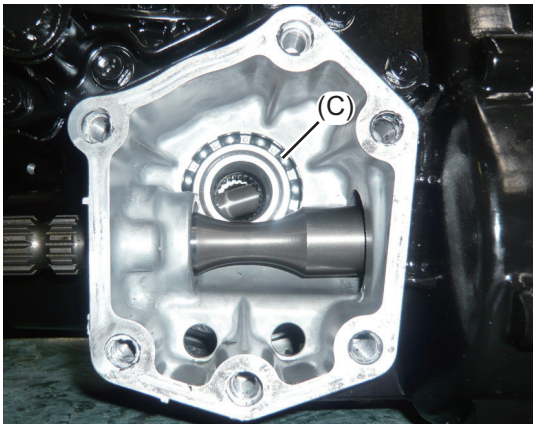

8. Remove the Final Pinion Shaft (A) and the Bevel Gear (B).

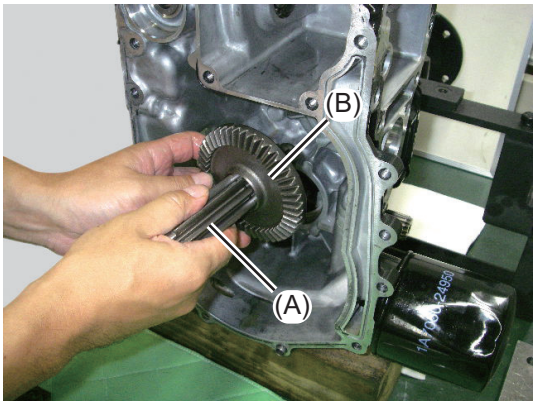

9. Disassemble the Differential Lock Shaft (A) and the Differential Case (B).

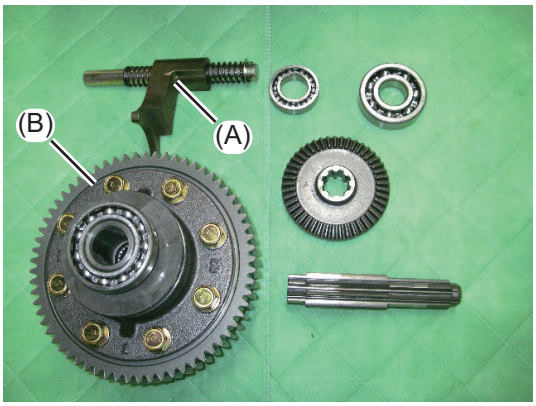

10. Disassemble the Differential Lock Fork Shaft. Remove the External Snap Ring 16 retaining the Red Spring. Perform this work while wrapping the Spring with a clean shop towel in order to prevent the Spring from jumping off the Shaft.

⚠ WARNING

●Wear safety glasses/goggles during this activity.



11. Remove the External Snap Ring 16 retaining the Black Spring.

⚠ WARNING

●Wear safety glasses/goggles during this activity.

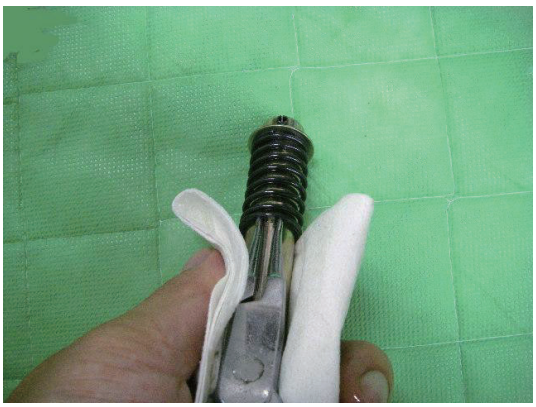

12. Remove the Spring Pin in the shaft end with a punch and hammer.

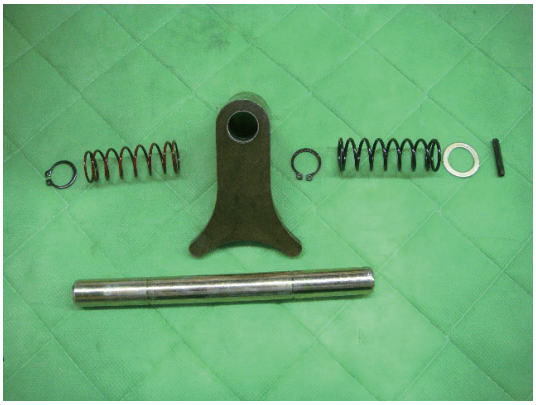

NOTE:

- The Black Spring goes to Spring Pin side of the Shaft.

IMPORTANT

- The Differential Case is supplied only as an assembly. The following disassembly is for informational purposes only.

13. Disassemble the Differential Case. Remove the Bearing (A) using a bearing separator and bearing pulley or hydraulic press. This allows the Differential Lock Pin (B) to be removed.

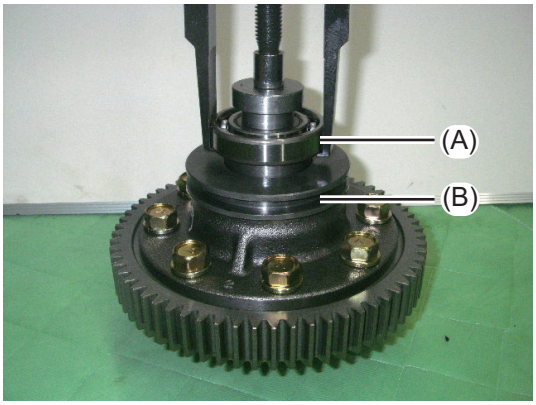

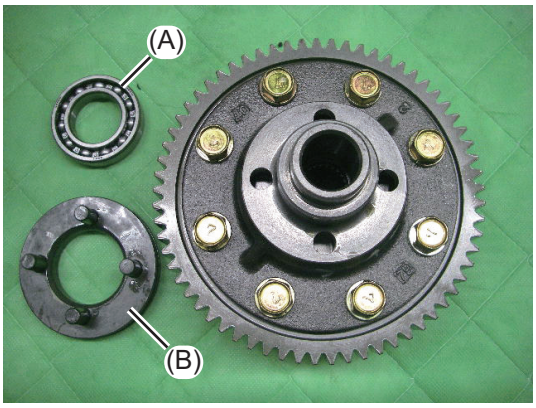

14. Loosen the eight (8) Bolts. Since ThreeBond's Thread Lock has been applied to them, use an air impact wrench etc. if they are difficult to remove.

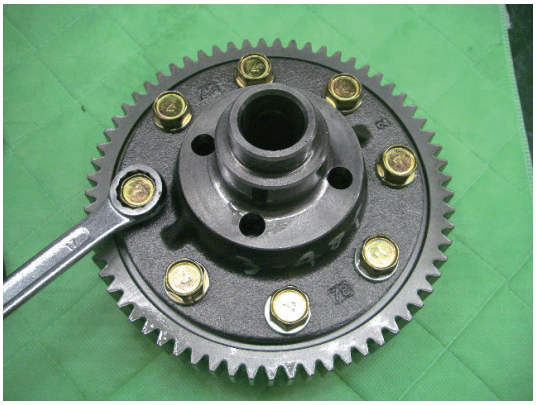



IMPORTANT

- The Differential Case is supplied only as an assembly.

NOTE:

- Only remove the Power Take Off Shaft if absolutely necessary.

15. Disassemble the Power Take Off (PTO) Shaft. Loosen the two (2) M8 x 20 mm (L: 0.8 in.) Bolts (A) and remove them together with the Washers.

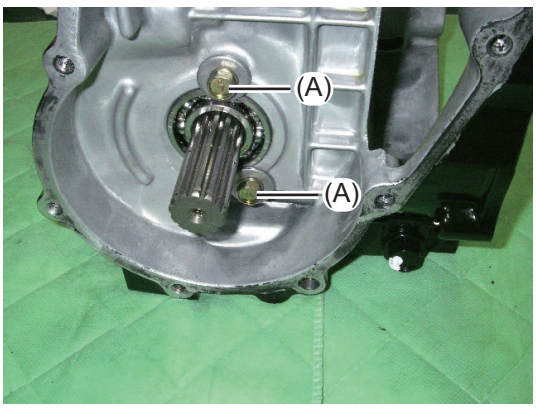

16. Take out the shaft by tapping its end with a plastic hammer. This allows the Oil Seal and the Needle Bearing to be removed.

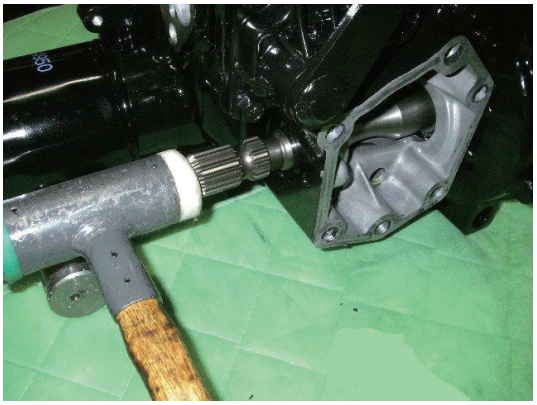



ATTENTION

- If not damaged , the Shaft should not be removed. The Needle Bearing is press-fitted. Therefore, removing the Shaft damages the Needle Bearing so that the Bearing cannot be reused.

17. Disassemble the Parking Brake. Remove the six (6) M8 x 25 mm (L: 1.0 in.) Bolts and remove the Brake Cover.

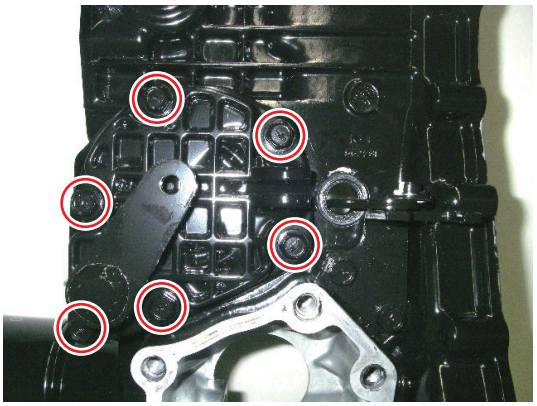

IMPORTANT

- Note that the three (3) Steel Balls (A), Actuator (B), two (2) Friction Plates (C) and two (2) Steel Plates (D) easily drop off at the time of removal of the Brake Cover.

18.Remove the External Snap Ring 20 and remove the Cam Lever (E).



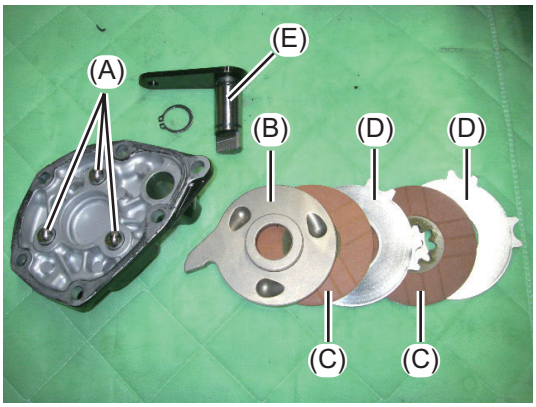

ATTENTION

- When removing the Cam Lever (E), check whether any burr exists on the chamfered section of the Cam Lever (E) before removing. If a burr exists, remove before pulling out the Cam Lever (E). Failure to do so can damage the Brake Cover to cause oil leakage.

NOTE:

- Grinding off a burr does not affect the brake performance.

IMPORTANT

- Keep the Friction Plates (C) and the Steel Plates (D) in such a way that their assembled order and orientation can be identified.

NOTE:

- Each of the Friction Plates has a red surface and a black surface. The black surface should be directed toward the Steel Plate positioned at the center.

6-2 Assembling Procedure

Clean all housings and parts prior to assembling of Transaxle.
Remove all traces of gasket material from machined surfaces.

6-2-1 Assembling the Transaxle

(1) Assembling the brake

1. Align the Steel Plate (B) with the four grooves (A) in the Transmission Case so as to fit the Steel Plate (B) in the Transmission Case. Then fit in two each of the Friction Plates (C), Steel Plates and Friction Plates in that order.

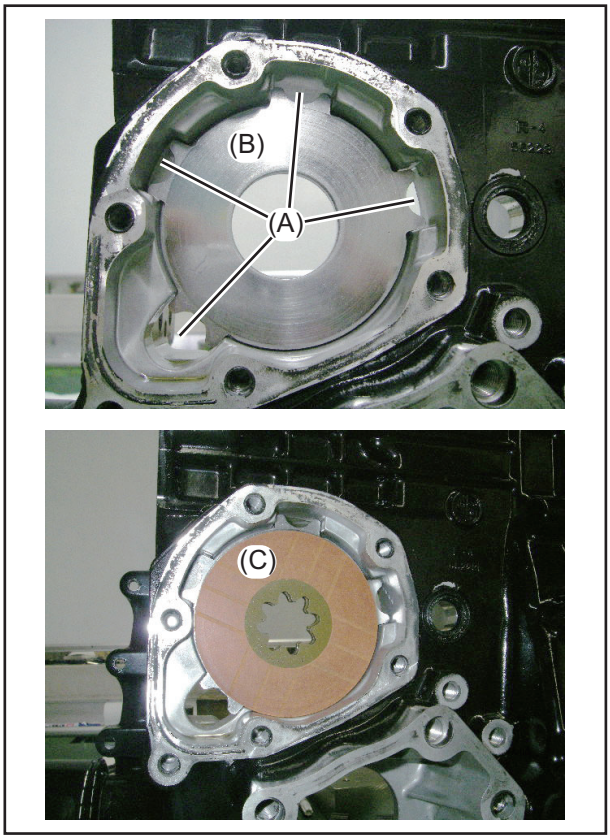

IMPORTANT

- The order and orientation for assembling the Friction and Steel Plates should be the same as those for disassembling them.
- For installing new Friction Plates, soak them in transmission oil for at least three hours in advance.
- The black surface of each Friction Plate should be directed toward the Steel Plate in the center.

2. Install the Cam Shaft (B) in the Brake Cover. Apply grease to the O-ring (A).Secure the cam shaft (B) with the External Snap Ring and make sure that the Cam Shaft (B) rotates smoothly.

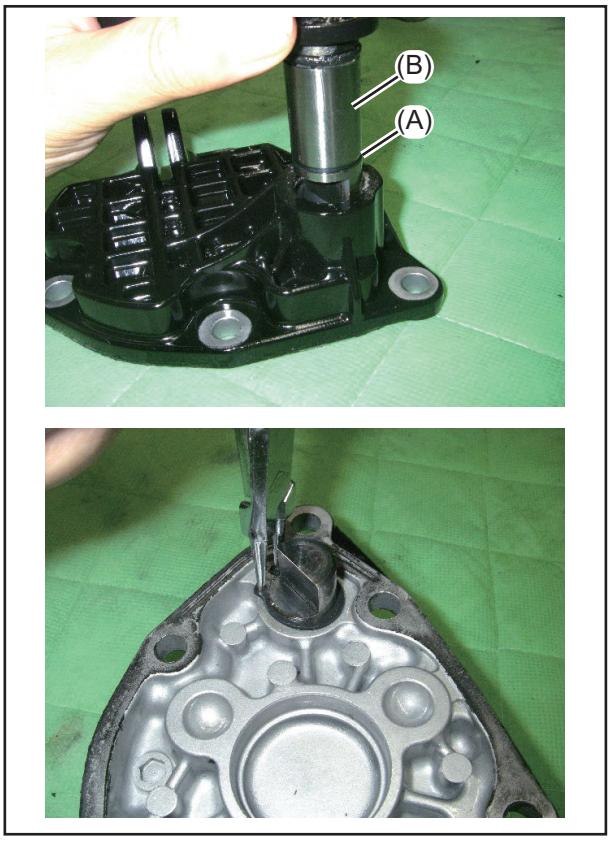

3. Apply grease to the three (3) Steel Balls (A) and set them in the Brake Cover pockets. Then place the Actuator on top of them (B).

NOTE:

●Fit the Brake Cam face with the Actuator face.

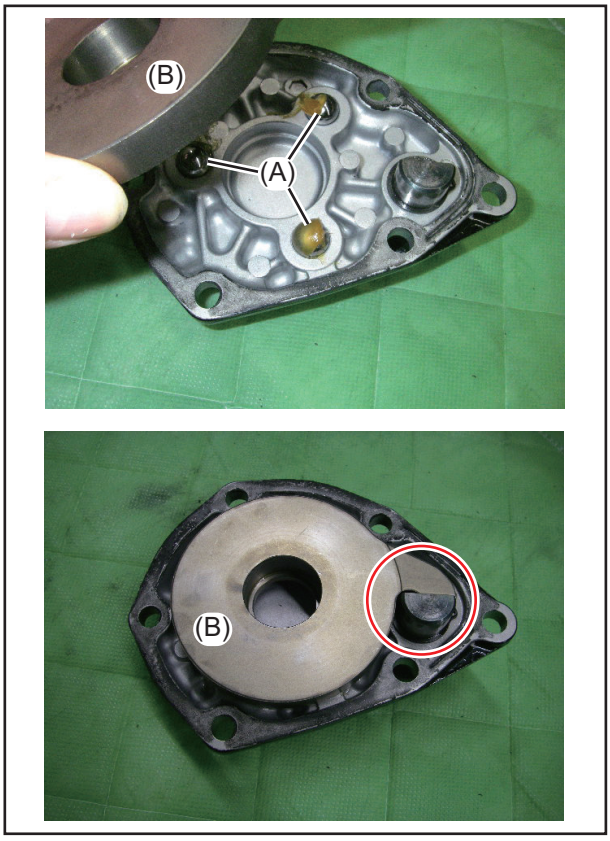

4. Apply Liquid Gasket Sealer to the mating surfaces. Install the Actuator to the Transmission Case, being careful not to drop the Actuator. Use Liquid Gasket Sealer: ThreeBond's TB1216 or its equivalent

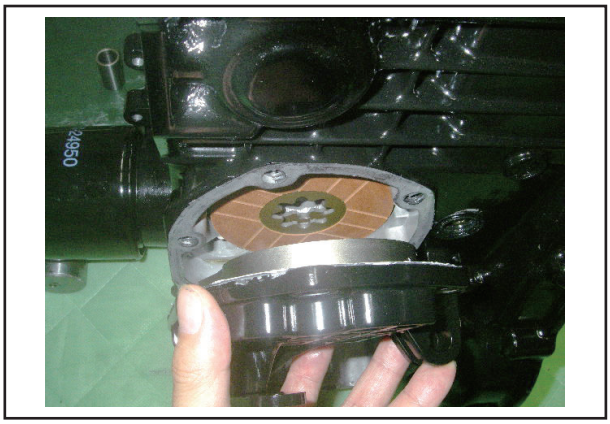

5. Tighten the six (6) Bolts diagonally.

Bolt tightening torque
16.6 - 21.7 ft·lbs (22.5 - 29.4 N·m)

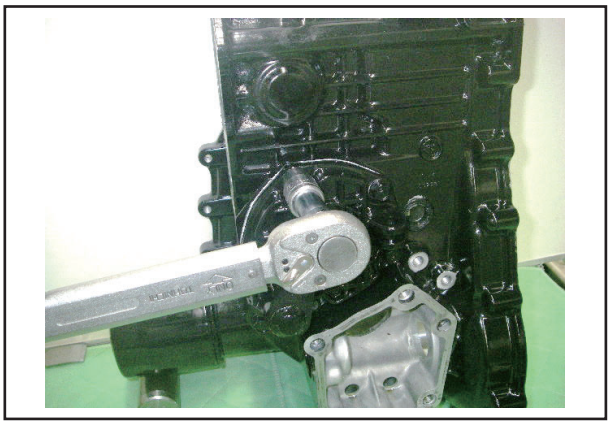

(2) Assembling the Power Take Off (PTO) shaft

1. Press-fit the Needle Bearing and the Oil Seal into the Transmission Case. Press-fit the Bearing #6205 (B) onto the Power Take Off (PTO) Shaft (A) and then install into the Transmission Case.

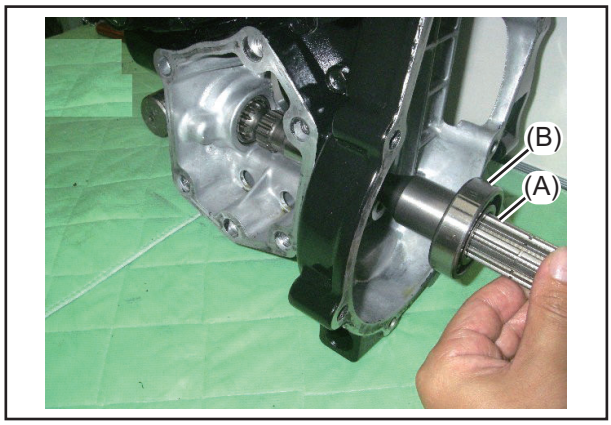

IMPORTANT

- Apply transmission oil to the Bearing. Apply grease to the Oil Seal lip.

2. Install the two (2) Washers (A) and the two (2) M8 x 20 mm (L: 0.8 in.) Bolts (B), to retain the Power Take Off (PTO) Shaft from coming out.

Bolt tightening torque
16.6 - 21.7 ft·lbs (22.5 - 29.4 N·m)

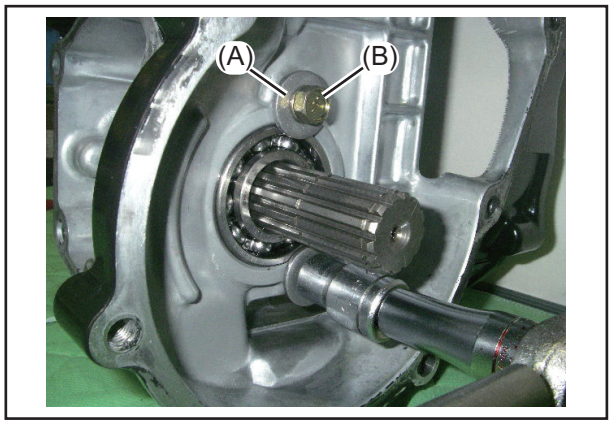

(3) Assembling the left hand axle shaft.

1.

NOTE:

●The longer shaft is the Left Hand Axle Shaft.

	Name		Name
(A)	Rear Axle Housing	(B)	Rear Axle Shaft
(C)	Internal Snap Ring 55	(D)	Collar
(E)	Sleeve	(F)	Oil Seal
(G)	Bearing #6006	(H)	Collar
(I)	External Snap Ring 29		

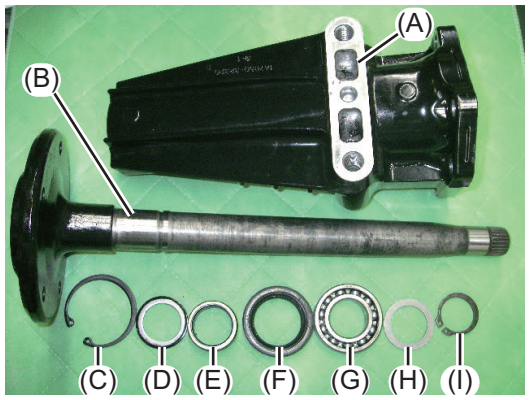

2. Press-fit the Bearing #6006 (A) and the Oil Seal (B) into the Axle Housing and secure them with the Internal Snap Ring.

IMPORTANT

●Apply grease to the outer and inner circumferences of the Oil Seal (B).

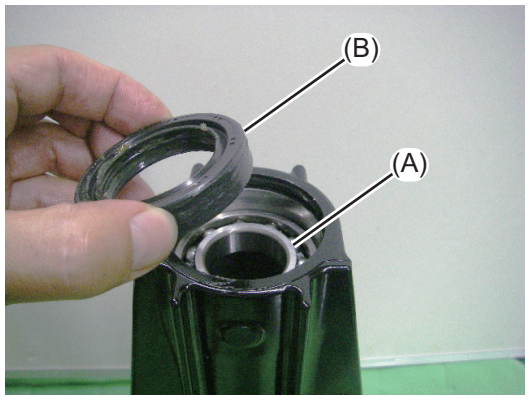



3. Install the Collar (Flat Washer) and then the Sleeve on the Axle Shaft. Then cover them with the Axle Housing.

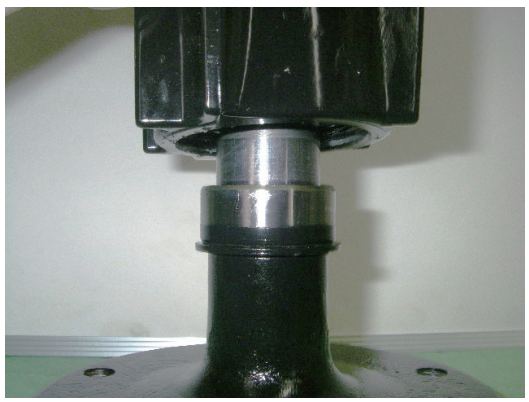

4. Install the Flat Washer and then the External Snap Ring 29 on the Axle Shaft. They will stop at the position shown on the right.

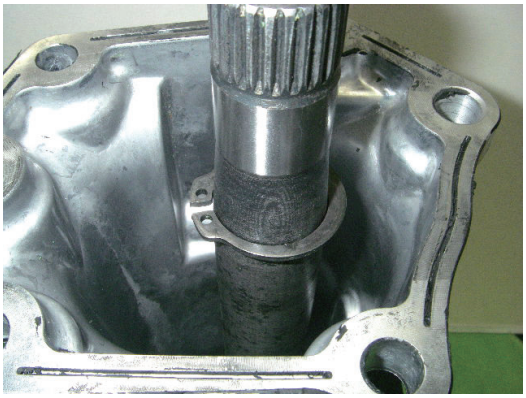

5. Place a pipe against the External Snap Ring 29 and tap the pipe with a plastic hammer, until the External Snap Ring 29 fits into the groove.



ATTENTION

- The diameter of the Axle Shaft is tapered and is increased in two steps. Therefore, the internal diameter of the pipe to be used should be 1.20 - 1.26 in. (30.5 - 32.0 mm).

6. Make sure that the External Snap Ring has properly snapped into the groove. Moreover, make sure that the Rear Axle Shaft smoothly rotates. If not, disassemble and then reassemble them.

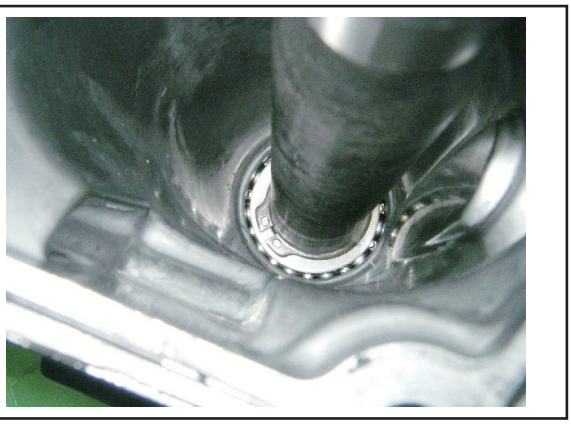

7. Install the two (2) Positioning Bushings (Locating Pins) (A) to the Transmission Case. Apply Liquid Gasket Sealer to the mating surface of the Axle Housing and assemble them together. Use Liquid Gasket Sealer: ThreeBond's TB1216 or its equivalent

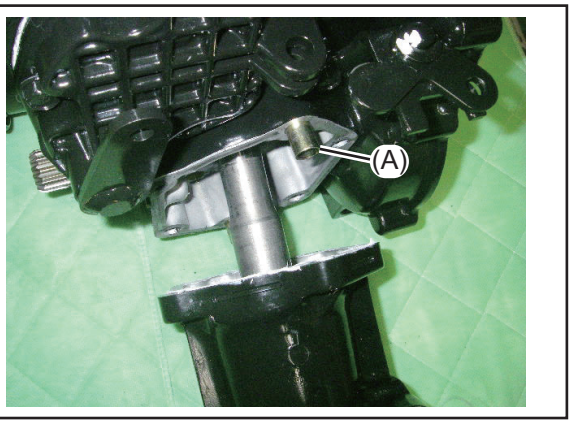

8. Tighten the six (6) M10 x 35 mm (L: 1.4 in.) Bolts diagonally.

Bolt tightening torque
32.5 - 43.4 ft·lbs (44.1 - 58.8 N·m)

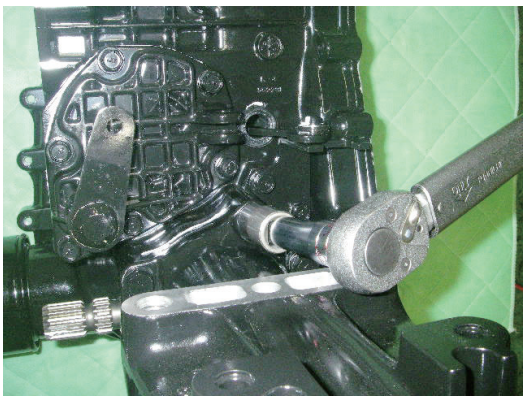

STOP **IMPORTANT**

- The Differential Case is supplied only as an assembly. The following reassembly is for informational purposes only.

(4) Assembling the differential section

1. Press-fit the Bearing #6007 (A) into the Right Hand Differential case.

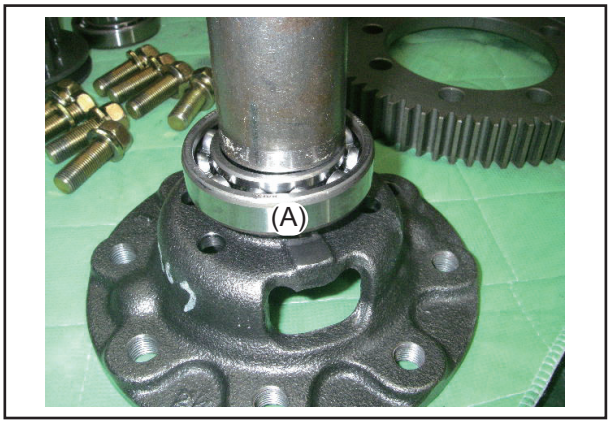

2. Apply transmission oil to the sliding surface of the Retainer (A). Install the Retainer (A) and install the Side Gear (B).

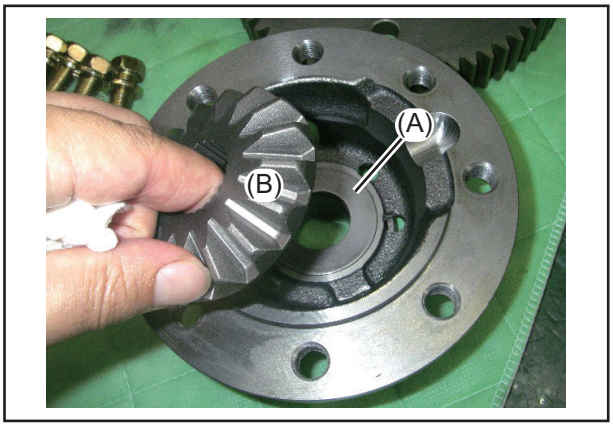

3. Install the Differential Pinion Gear and the Retainer on the Differential Pinion Shaft with the higher step of the Retainer facing toward the Right Hand Differential Case.

IMPORTANT

●Apply transmission oil to the sliding surfaces.

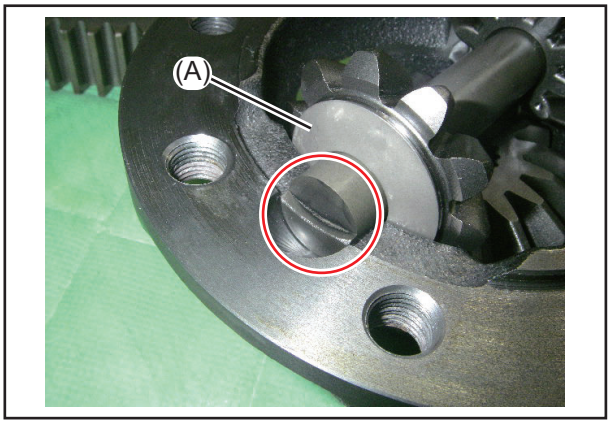

4. Place the Differential Side Gear (B) on the Final Gear (A) while aligning their bolt holes.

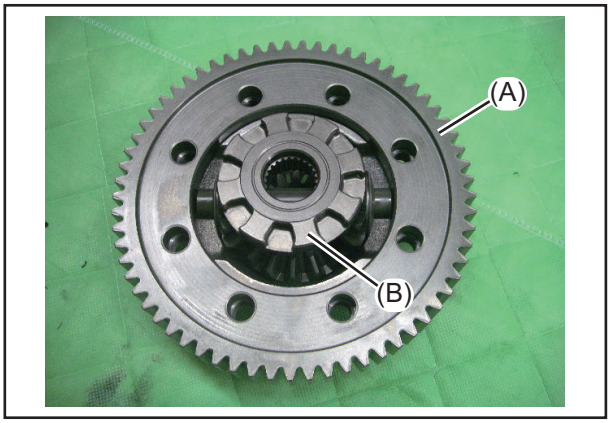

5. Apply grease to the Left Hand Differential Case So the Retainer (A) does not fall out.

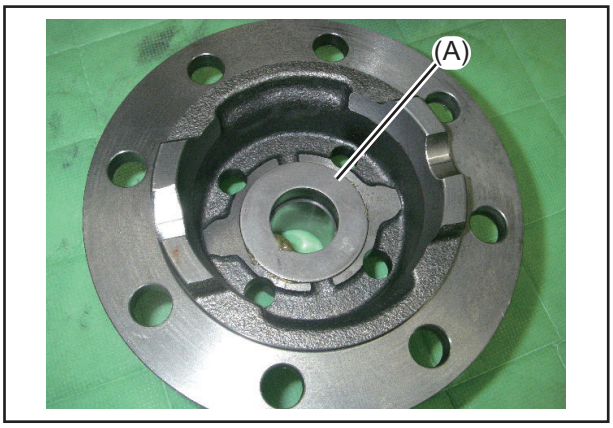

IMPORTANT

- Apply transmission oil to the sliding surfaces.

6. Install the Left Hand Differential Case over the Right Hand Differential Case, being careful not to drop the Retainer.



7. Rotate the Differential Case Side Gear (A) from the hole of the (lower) Right Hand Differential Case and make sure that the Differential Case Side Gear (A) rotates smoothly.

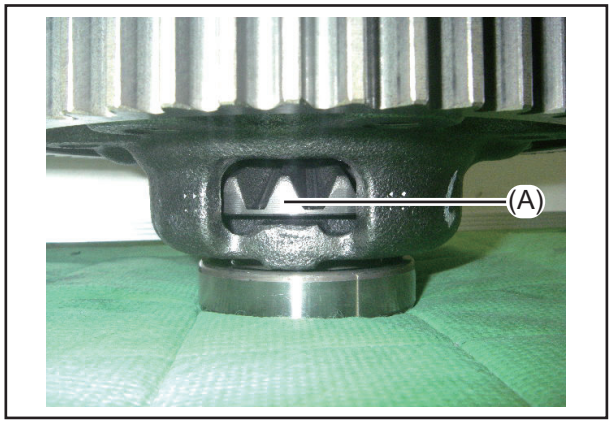

8. Apply ThreeBond's Thread Lock to the eight (8) Bolts and tighten them to 66.4 - 77.4 ft·lbs.

Bolt tightening torque
66.4 - 77.4 ft·lbs (90 - 105 N·m)

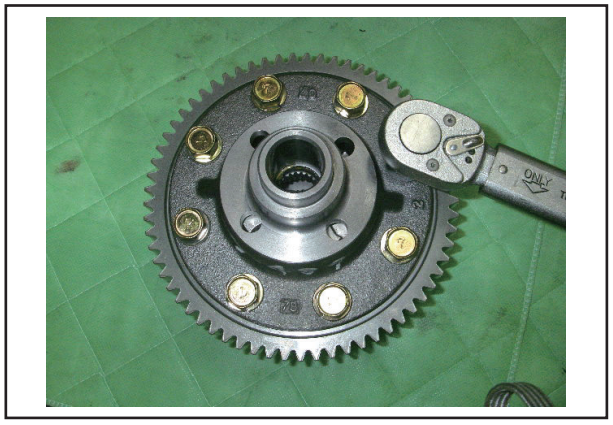

CAUTION

- When reusing the disassembled Final Gear, re-tap its threaded holes to remove old Thread Lock. Always replace the thread lock on the bolts.

NOTE:

- Bolts are not available separately.

9. Place the Differential Lock Slider (A) in place on the Differential Case and press-fit the Bearing #6007 (B) in place using a hydraulic press.

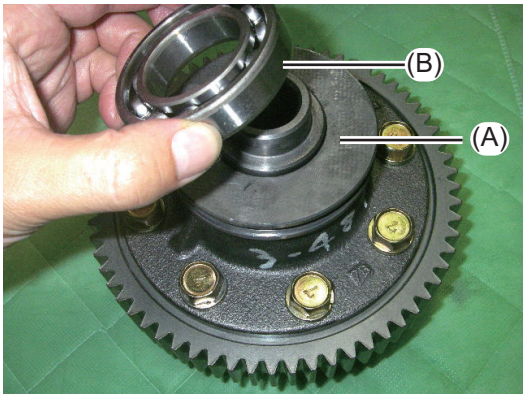

10. Assemble the Differential Lock Fork Assembly. Press the Spring Pin (B) in the Differential Lock Fork Shaft (A) so that the protrusions are even (same in length) on both sides of the Differential Lock Fork Shaft (A).

IMPORTANT

- The slit of the Spring Pin (B) should be positioned as shown in the photo right.

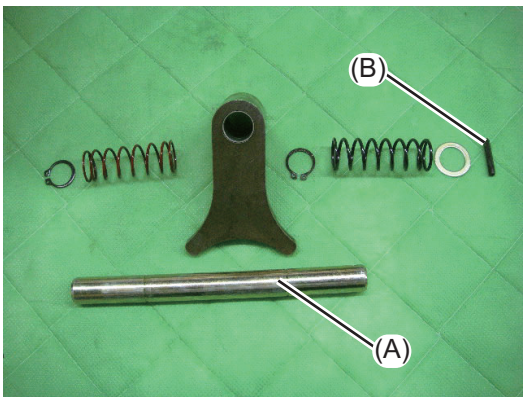

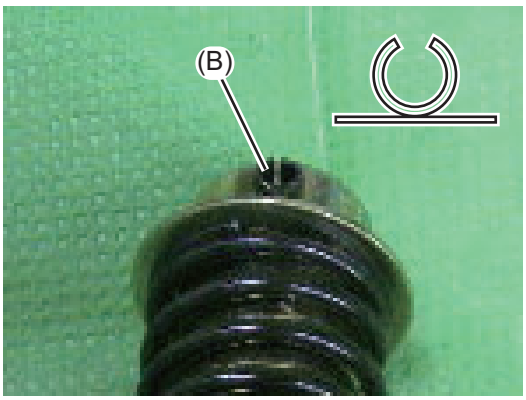

11. Put in the Flat Washer (A), Black Spring (B), External Snap Ring 16 (C) and Differential Lock Fork (D) in that order.

ATTENTION

- Be careful of the orientation of the Differential Lock Fork (C).

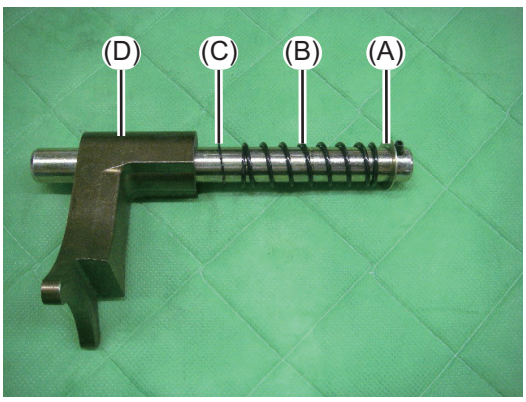

12. Push down the Differential Lock Fork until the External Snap Ring fits in the groove of the Differential Lock Fork Shaft.

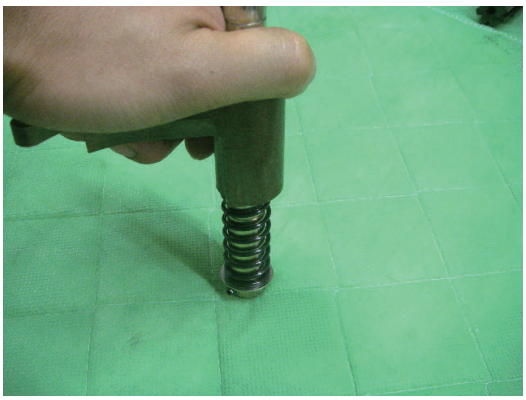

13. In the same way, insert the Red Spring (A) and then the External Snap Ring 16 (B) in place.

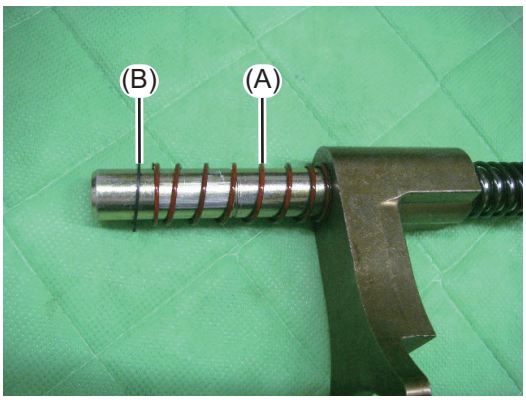

14. Using a pipe etc., push down the External Snap Ring 16 until the External Snap Ring 16 fits in the groove of the Differential Lock Fork Shaft.



IMPORTANT

- Apply transmission oil between the Differential Lock Fork and the Differential Lock Fork Shaft, and check that they move smoothly. If not moving smoothly, the Differential Lock Fork and the Differential Lock Fork Shaft may be damaged. In such a case, again disassemble and check them.

15. Assemble the gear train. Slide the Bevel Gear (B) and then the Bearing #6005RSH2 (C) onto the Final Pinion Shaft (A).

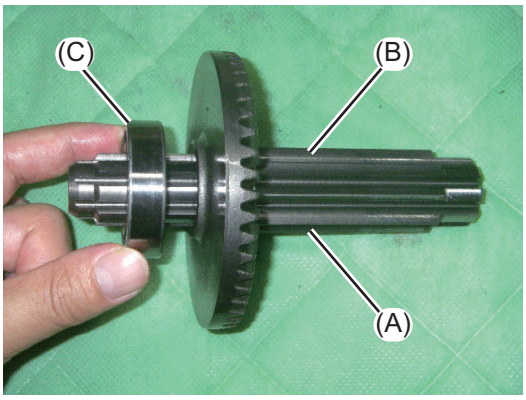

NOTE:

- Be careful about the orientation of the Bevel Gear (B).

16. Install the parts that were assembled in step 6-2 Assembling Procedure into the Transmission Case, while turning the Final Pinion Shaft in order to align the Friction Plates of the Brake that have been installed in step "6-2-1(1) on page 5-114" with the splines.

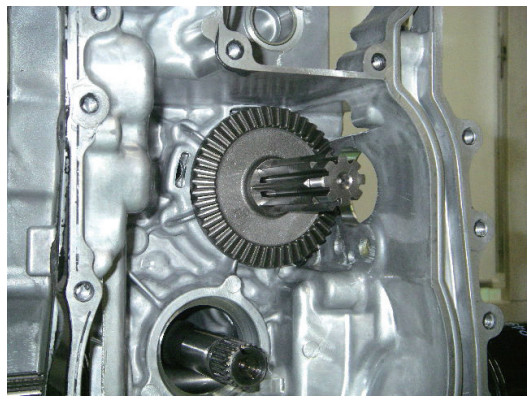

CAUTION

- Never drive them in with a hammer etc. Failure to follow this instruction causes the splines of the Friction Plates to be damaged.

17. Align the Differential Case (A), Differential Lock Fork Shaft (B) and Differential Lock Fork (C) as shown on the right.

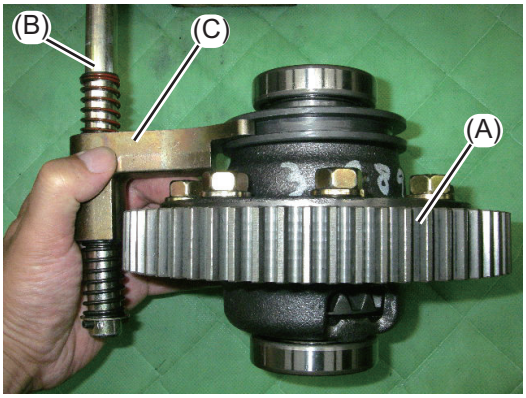

18.

1) With the Differential Lock Fork Shaft (A) aligned with the hole of the case boss.
2) The tooth phase of the Final Gear (B) aligned with that of the final Pinion Shaft (C).
3) The spline phase of the Differential Side Gear in the Differential Case aligned with that of the Axle Shaft, insert them.

Last) Insert the Bearing #TMB305 (D) in place.

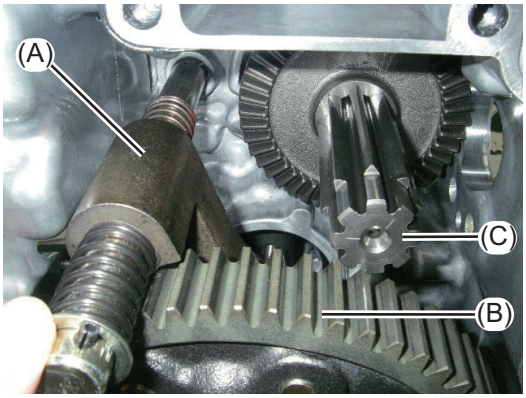

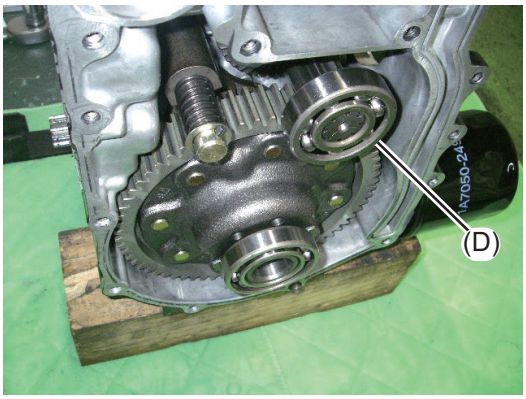

WARNING

- The Differential Case weighs about 15 lbs (7 kg). Therefore, working with your hand placed between the Differential Case and the Transmission Case or a workbench may cause your hand to be caught in them. Be extremely careful about your hand position.

(5) Installing the transmission cover

1. Install the Hydro Static Transmission (HST) Pump Trunnion (A) into the Transmission Case Cover. Hang the Spring on the Hydro Static Transmission (HST) Pump Trunnion (A) as shown in the photo below.

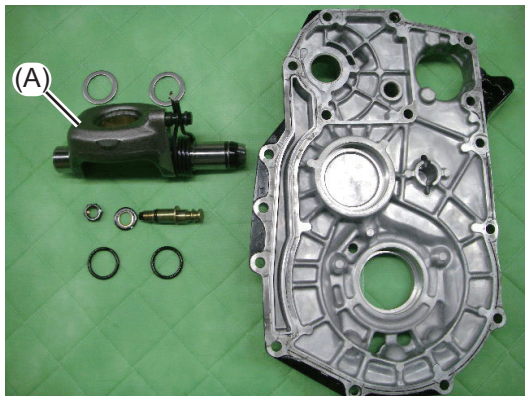



CAUTION

- The Spring is very strong. Therefore, work with care to avoid injury.

2. Pinch the Eccentric Fulcrum (A) in the Spring. Evenly and gradually put the Eccentric Fulcrum (A) together with the Swash Plate (B) into the Transmission Case.

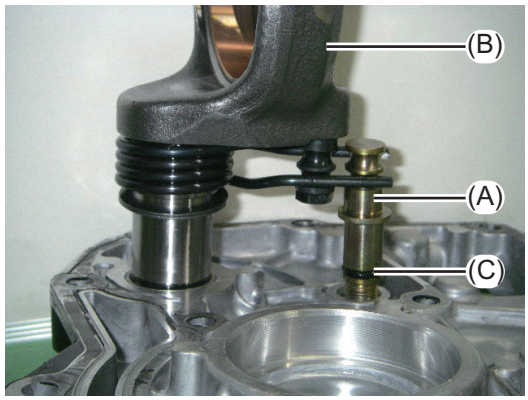

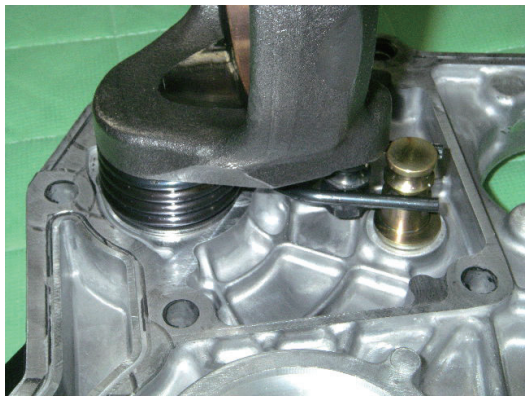

IMPORTANT

- Apply oil between the Swash Plate (B) and the Bushing. Apply grease to the O-Ring of the Eccentric Fulcrum (A).

3. Install the Transmission Case Cover to the Transmission Case. Apply Liquid Gasket Sealer to their mating surfaces and insert the two Positioning Bushings (Locating Pins) in place.

   Liquid Gasket Sealer:
   ThreeBond's TB1216 or its equivalent

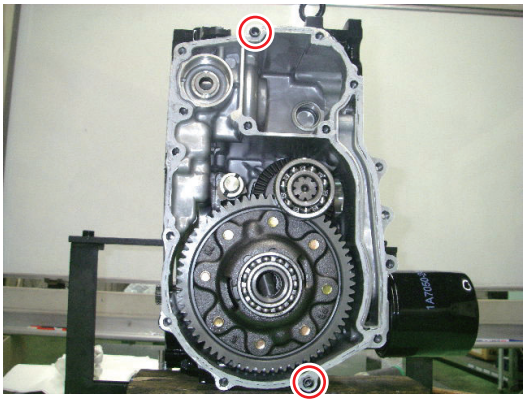

4. Slide the Washer (A) onto the Hydro Static Transmission (HST) Pump Trunnion. Apply transmission oil to the Washer (A) and fit the Washer (A) in the Bushing that has been installed into the Transmission Case.

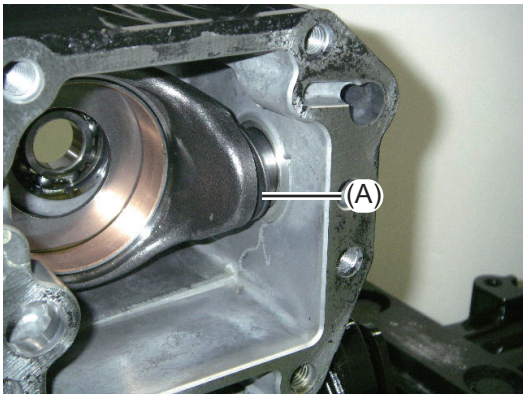

5. Align the Spring Pin phase of the Differential Lock Shift Shaft with the cutout (A) on the Transmission Case Cover.

NOTE:

- Confirm this by looking in though the Hydro Static Transmission (HST) mating surface (i.e., the front side of the Transmission).

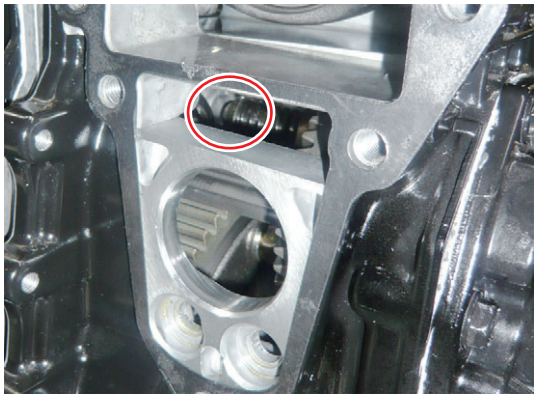

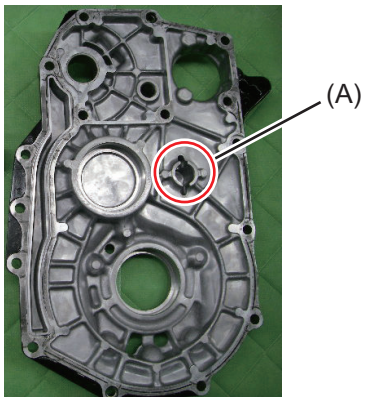

6. Tighten the sixteen (16) M8 x 40 mm (L: 1.6 in.) Bolts.

Bolt tightening torque
16.6 - 21.7 ft·lbs (22.5 - 29.4 N·m)



IMPORTANT

- The Transmission Case can be easily closed by hand. Therefore, never hit with a hammer etc. Failure to do so causes the case to be damaged.

7. Tighten the M12 Nut while aligning the mark of the Eccentric Fulcrum.

Nut tightening torque
16.6 - 21.7 ft·lbs (22.5 - 29.4 N·m)

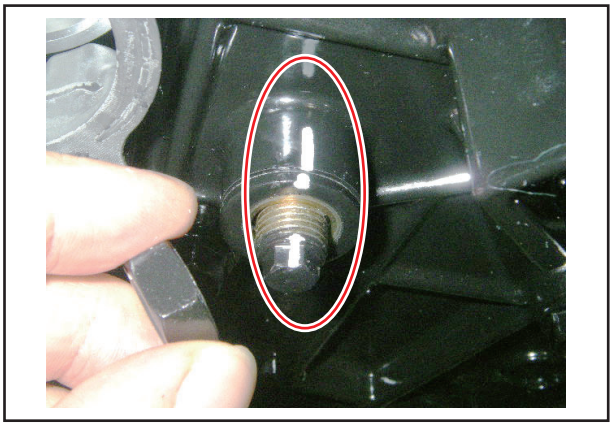

WARNING

- This work is for determining the neutral position during driving. Therefore, make sure to align the mark before tightening the M12 (0.5 in.) Nut. In addition, be careful not to move the Eccentric Fulcrum.

8. Apply grease to the two (2) O-Rings and slide them onto the Control Aarm Shaft.



9. Install the Control Arm onto the Control Arm Shaft.

	Name		Name
(A)	Control Arm	(B)	Washer A
(C)	External Snap Ring 28	(D)	Washer B
(E)	M14 x 30 mm (L: 1.2 in.) Bolt		

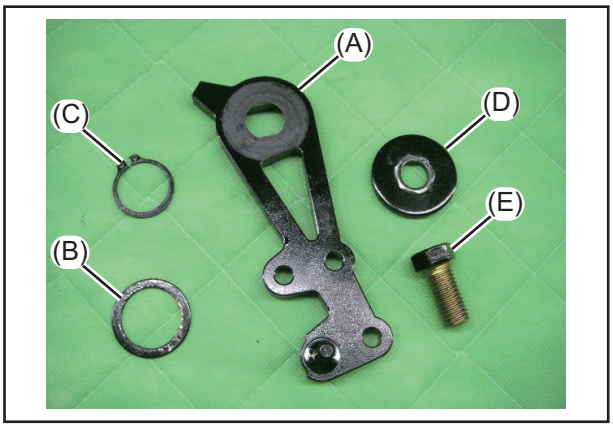

10. Slide the Washer (A) onto the Control Arm Shaft and secure with the External Snap Ring 28.

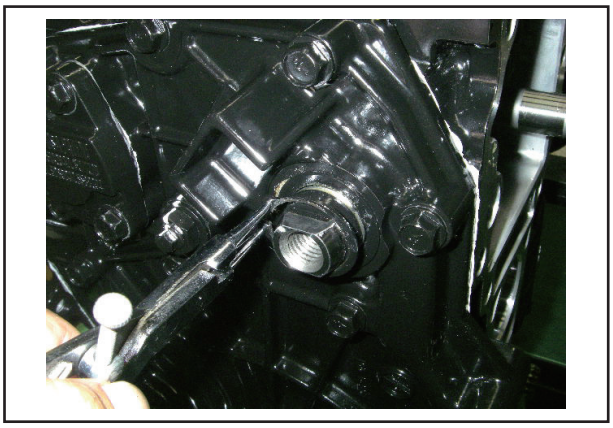

11. Install the Control Arm and insert the Washer (B). Finally, tighten them with the Bolt to 47.9 - 62.7 ft·lbs (65.0 - 85.0 N·m).

Bolt tightening torque
47.9 - 62.7 ft·lbs (65.0 - 85.0 N·m)

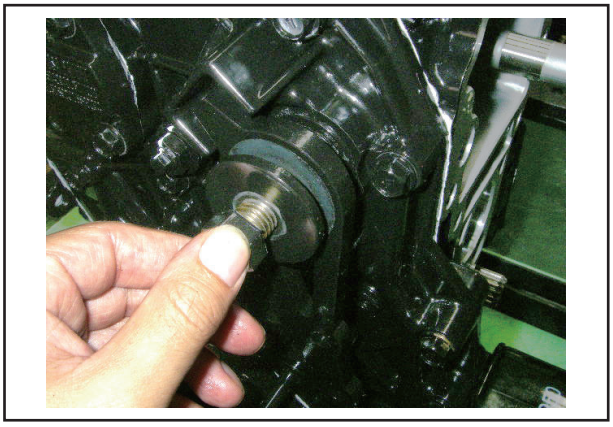

IMPORTANT

- Make sure that the Control Arm moves smoothly.

(6) Assembling the right hand axle shaft

1. Apply Liquid Gasket Sealer to the mating surface of the Transmission Case and insert the two Positioning Bushings (Locating Pins) in place.

   Liquid Gasket Sealer:
   ThreeBond's TB1216 or its equivalent

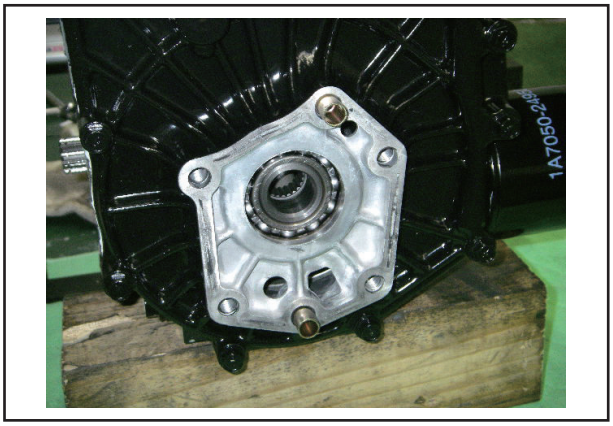

2. Gradually insert the Axle Shaft while rotating it so as to engage the Axle splines with the splines of the Differential Side Gear. Tighten the six (6) M10 x 35 mm (L: 1.4 in.) Bolts.

Bolt tightening torque
50.5 - 64.5 ft·lbs (68.4 - 87.4 N·m)

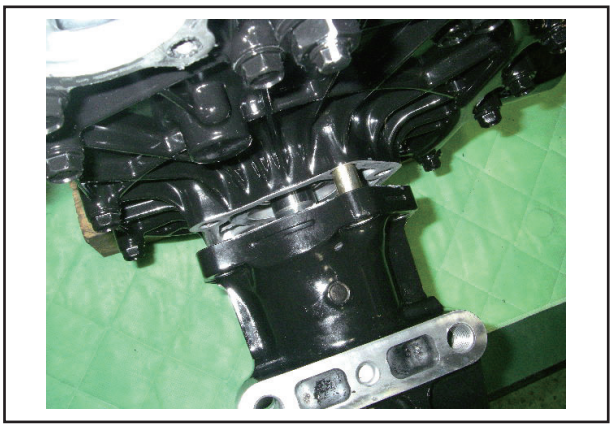

3. Apply transmission oil to the Oil Filter mounting surface and install the Oil Filter. Use an Oil Filter Wrench to tighten.

NOTE:

- If deformed, the Oil Filter should be replaced with a new one even before the time of replacement.

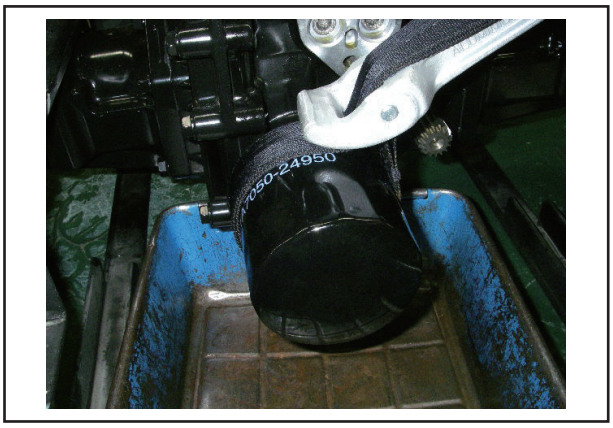

6-2-2 Assembling the Power Take Off (PTO)

(1) Installing the Hydro Static Transmission (HST) pump shaft

1. Insert the Bearing #6004 (A) and secure it with the Internal Snap Ring 42.

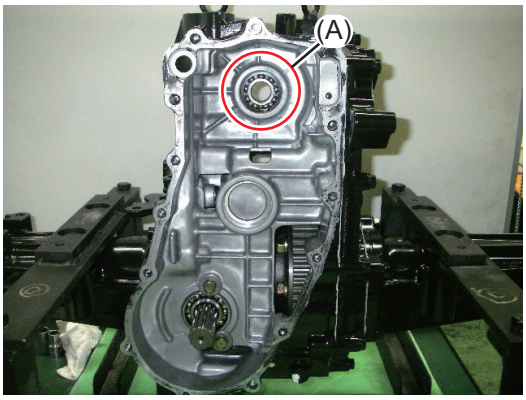

2. Assemble the pump shaft.

	Name		Name
(A)	Pump Shaft	(B)	External Snap Ring 12
(C)	Washer 13 x 71 x 1	(D)	Needle Bearing
(E)	External Snap Ring 25	(F)	Washer 20 x 34 x 1
(G)	Washer 20.5 x 30 x 1	(H)	External Snap Ring 20

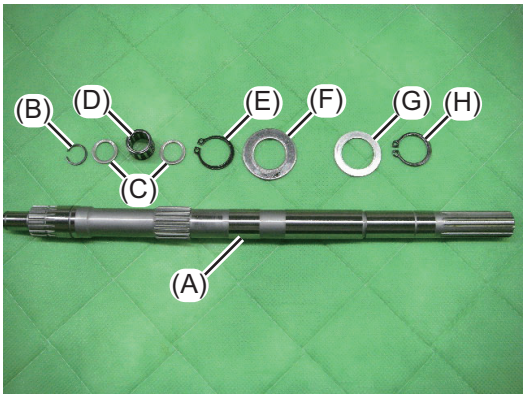

IMPORTANT

- Be careful to set the Washers correctly.

3. Apply molybdenum grease to the Needle Bearing (D) and then install the Washer (C), Needle Bearing (D), Washer (C) and External Snap Ring 12 (B) in that order.

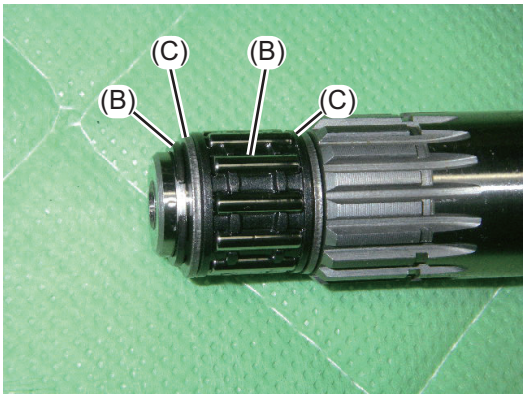

4. Insert the Pump Shaft (A), to which the External Snap Ring 20 (H) and the 20.5 x 30 x 1 Washer (G) have been installed, from the Hydro Static Transmission (HST) Pump Trunnion side (i.e., the front side of the Trans-Axle).

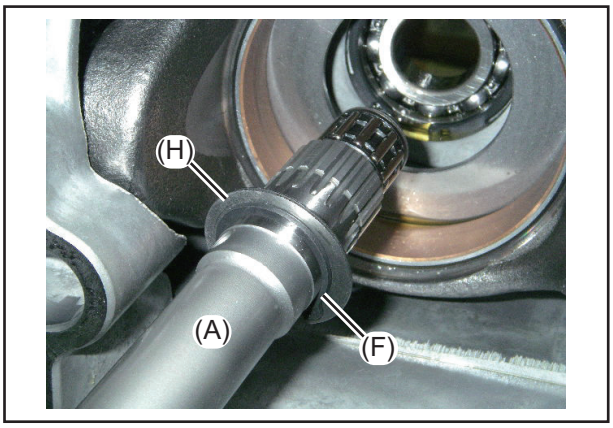

5. Subsequently, install the 20 x 34 x 1 Washer (F) and the External Snap Ring 25 (E) from the Power Take Off (PTO) side (i.e., the rear side of the Trans-Axle).

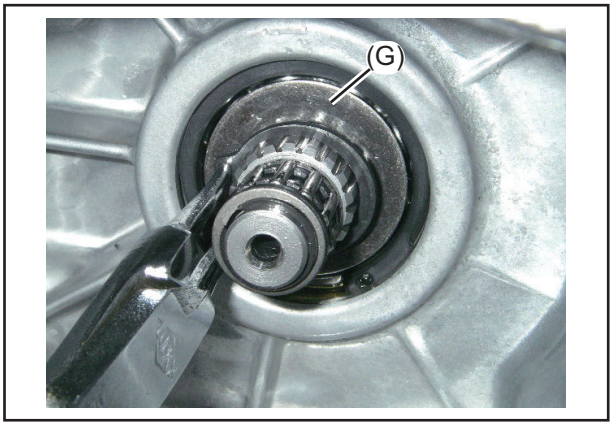

(2) Assembling the Power Take Off (PTO) clutch pack

1.

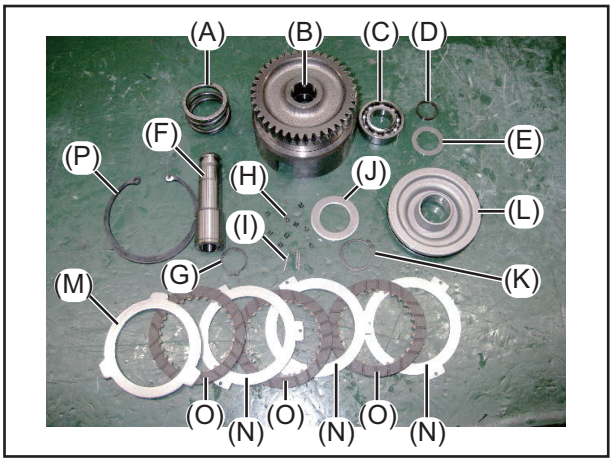

	Name		Name
(A)	PTO Return Spring	(B)	Clutch Gear
(C)	Bearing #6004	(D)	Ring Seal
(E)	Washer, 20.5 x 30 x 1	(F)	Clutch Shaft
(G)	External Snap Ring 20	(H)	Spring
(I)	Pin	(J)	Washer, 25 x 42 x 1
(K)	External Snap Ring 25	(L)	Piston
(M)	Steel Plate, 0.126 in. (3.2 mm) thick	(N)	Steel Plate
(O)	Clutch Disk Plate	(P)	Internal Snap Ring 80

Friction Disk Kit
CY-192157-26100

NOTE:

- The parts (H), (I), (M), (N) and (O) are supplied with the Friction Disk Kit.

2. Apply transmission oil to the O-Ring 75 (Q). Slide the O-Ring 75 (Q) onto the Piston (L) in place and insert into the Clutch Gear (B).

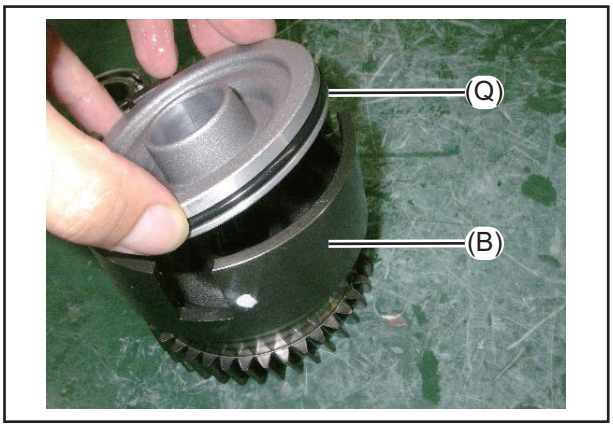

STOP **IMPORTANT**

- Be careful not to damage the O-Ring (Q) and the bore of the Piston (B). In addition, be careful about the orientation of the Piston (B).

3. Insert the Clutch Shaft (F) and secure it with the External Snap Ring 20 (G).

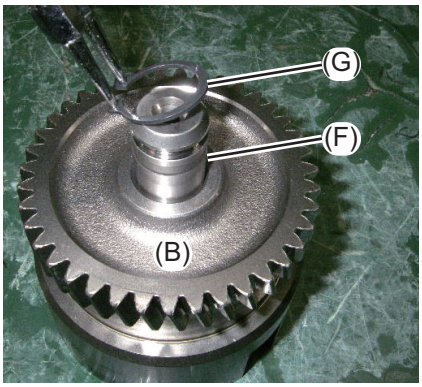

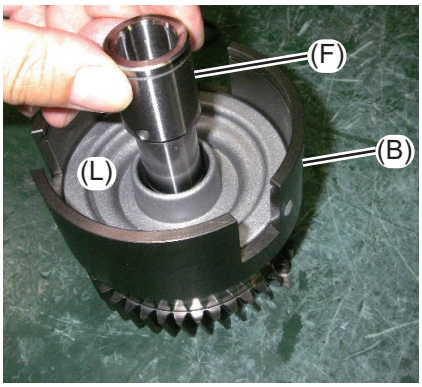

4. Slide the Washer (E) onto the Clutch Shaft and then press-fit the Bearing #6004 (C). Apply transmission oil to a new Seal Ring (D) and slide the new Seal Ring (D) onto the Clutch Shaft in place.

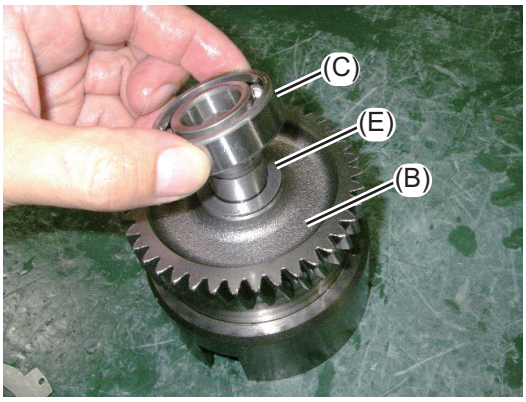



5. Insert the Power Take Off (PTO) Return Spring and Washer (J). Compress the Washer (J) with a hydraulic press using an arbor press tool and secure with the External Snap Ring 25 (K).

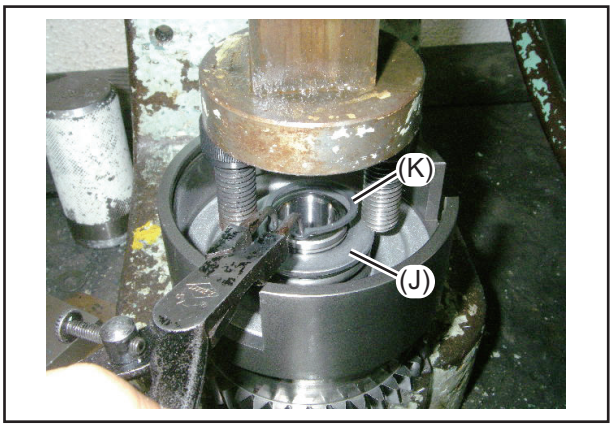

WARNING

- The Spring force is strong. Therefore, be extremely careful that no parts jump out and wear safety glasses/goggles during this activity. This work should be performed by two technicians.
- Before removing the hand press, make sure that the External Snap Ring 25 (K) has been installed securely.

IMPORTANT

- Press the Washer (J) in consideration of the expanded size of the External Snap Ring 25 (K). Be extremely careful of the strong Spring force.

6. Place the Steel Plate (N) and the Friction Plate (O) into the Clutch Gear (B) in that order. Insert the three (3) Pins (I) into the flange section of the Plate and put in the Springs (H).

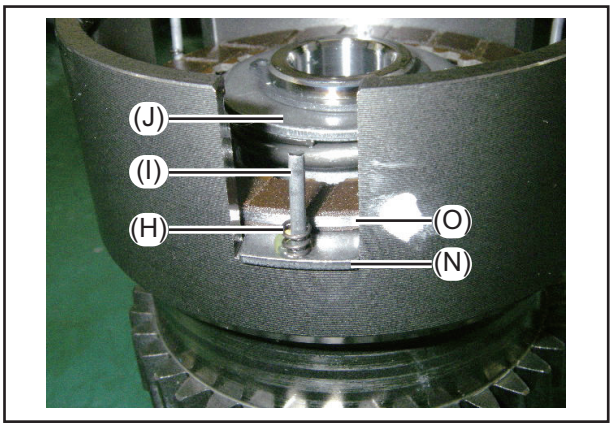

IMPORTANT

- The Clutch Disk Plate and the Steel Plate should be assembled in the same order and orientation as they were disassembled.

NOTE:

- Applying grease to the Pins (I) is helpful for easy installation.

7. Stack the Springs, Friction Disc and Friction Plates. Finally place the Steel Plate 3.2 (M), which is thicker than the Steel Plate (N), in position and secure with the Internal Snap Ring.

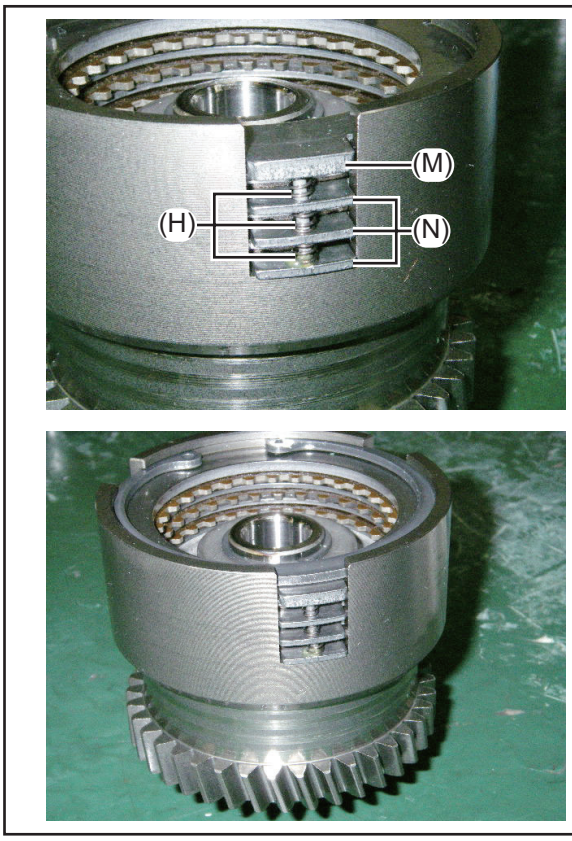

IMPORTANT

- Make sure that the Pins (I) and the Springs (H) are fitted properly in the Steel Plates (N) and (M).

(3) Assembling the Power Take Off (PTO) idle gear

1.

	Name		Name
(A)	Bearing #6204	(B)	Idle Gear Shaft
(C)	Washer	(D)	External Snap Ring 20
(E)	PTO Idle Gear		

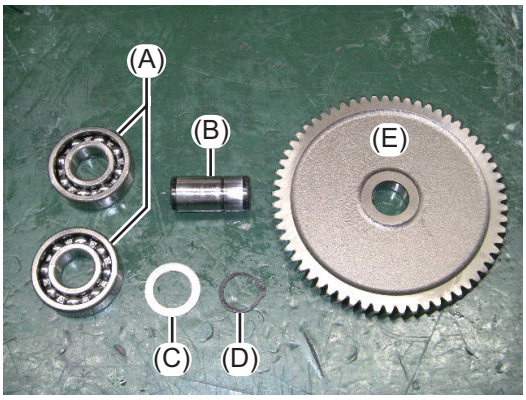

2. Fix the External Snap Ring 20 (D) to the Idle Gear Shaft (E) and press-fit the Bearing #6204 (A).

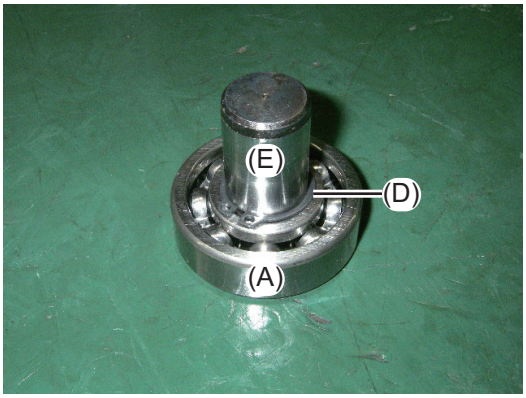

3. Insert the Power Take Off (PTO) Idle Gear (E), Washer (C) and Bearing #6204 (A) in that order.

NOTE:

●The front and back sides of the gear is the same.

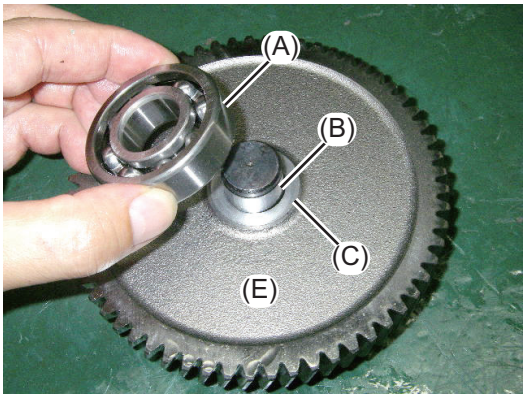

(4) Assembling the Power Take Off (PTO) gear

1.

	Name		Name
(A)	Power Take Off (PTO) Gear	(B)	Splined Collar
(C)	Needle Bearing	(D)	Internal Snap Ring 62
(E)	Bearing #16007	(F)	External Snap Ring 35
(G)	Spacer		

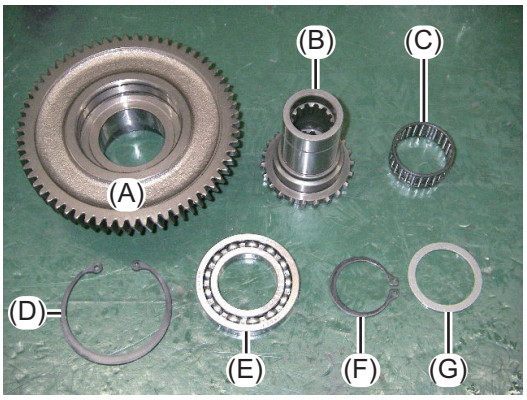

2. Fit the Bearing #16007 (E) into the Power Take Off (PTO) Gear (A) and secure with the Internal Snap Ring 62 (D).

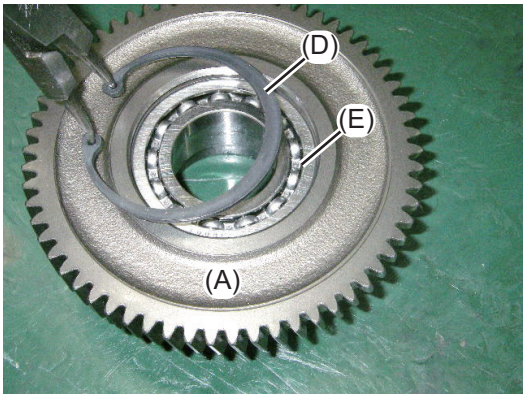

3. Apply transmission oil to the Needle Bearing (C) and slide the Needle Bearing (C) onto the Splined Collar (B).

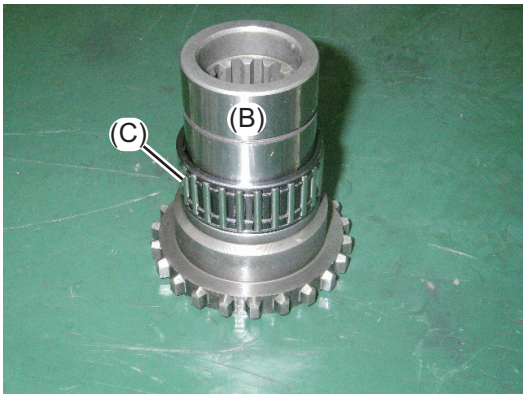

4. Aligning with the Power Take Off (PTO) Gear (A), insert the Spacer (G) and secure with the External Snap Ring 35 (F).

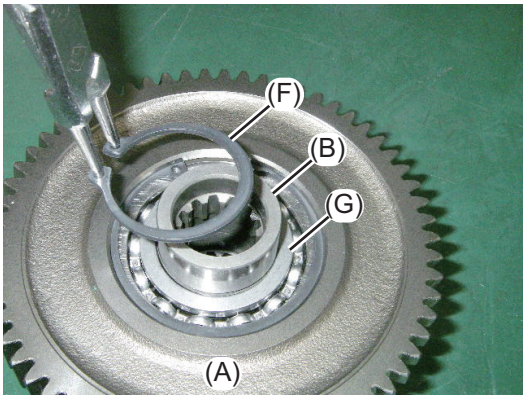

(5) Installing the Power Take Off (PTO) gear

1.

	Name		Name
(A)	Power Take Off (PTO) Brake Shoe	(B)	Splined Collar
(C)	Power Take Off (PTO) Clutch Gear Assembly	(D)	Power Take Off (PTO) Idle Gear Assembly
(E)	Power Take Off (PTO) Gear Assembly		

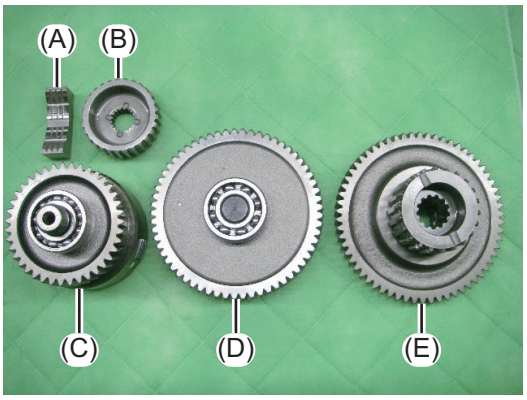

2. While aligning the Friction Plate phase of the Power Take Off (PTO) Clutch Gear Assembly (C), gradually insert the Splined Collar (B).

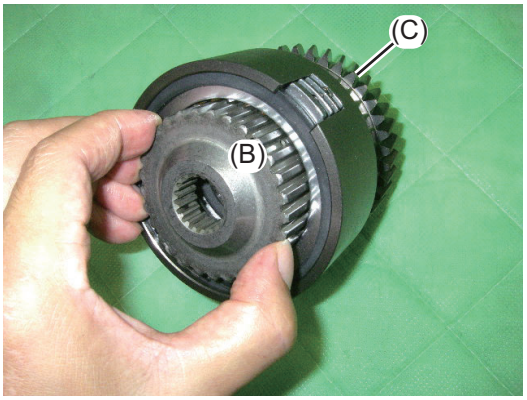

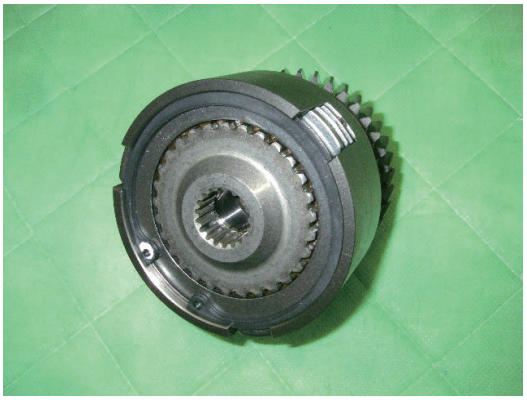

STOP **IMPORTANT**

- Do not forcibly insert the Splined Collar (B). Failure to do so will damage the Friction Plate splines.

3. Insert the O-Ring P12.0 into the hole of the Brake Shoe (A). Then fit the Brake Shoe (A) together with the Power Take Off (PTO) Clutch Gear Assembly (C) into the Pump Shaft splines (F).

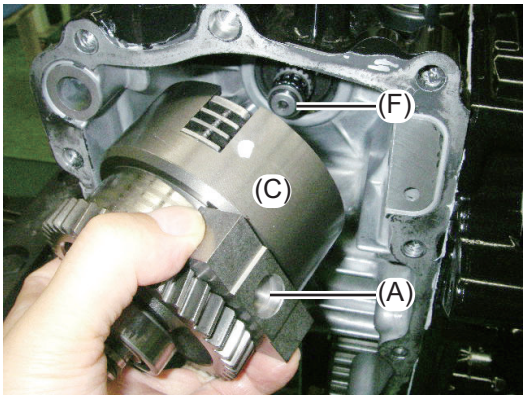

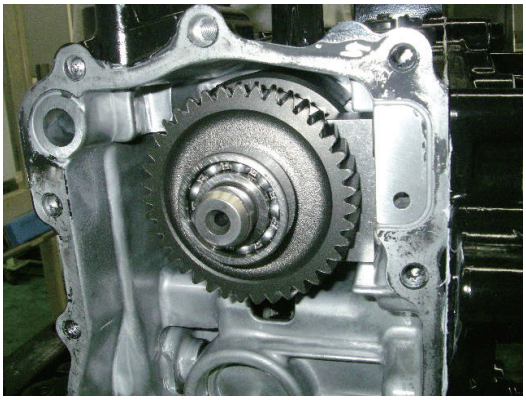

4. Engage the Power Take Off (PTO) Gear Assembly (E) with the Power Take Off (PTO) Shaft splines (G) and secure with the External Snap Ring 24 (H).

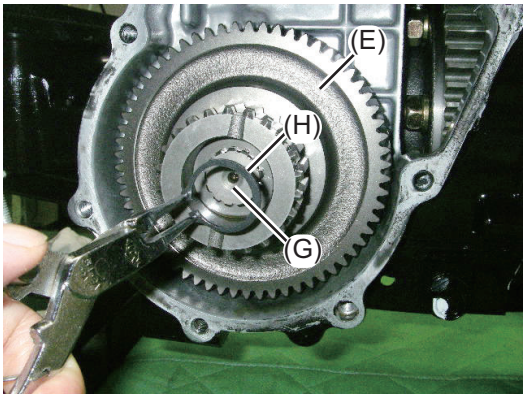

5. Install the Power Take Off (PTO) Idle Gear Assembly (D) with the External Snap Ring facing the rear of the tractor and the Washer only side (J) facing the front of the tractor.

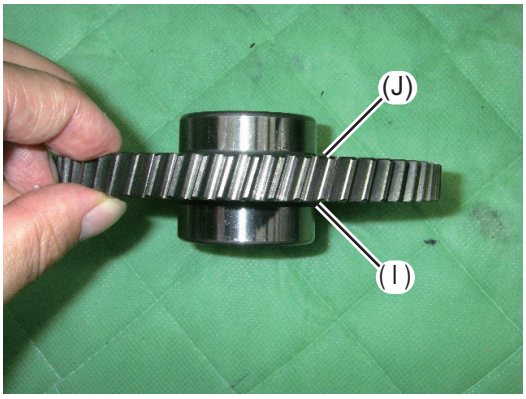

6. When assembling the Power Take Off (PTO) Idle Gear Assembly (D), insert the Power Take Off (PTO) Clutch Gear Assembly (C) while slightly lifting it.

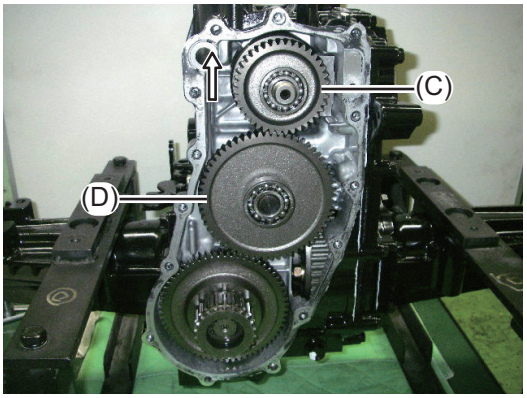

(6) Assembling the Rear Power Take Off (PTO) shaft

1.

	Name		Name
(A)	Rear Power Take Off (PTO) Gear	(B)	Rear Power Take Off (PTO) Shaft
(C)	External Snap Ring 50	(D)	Bearing #6009
(E)	Bearing #16010		

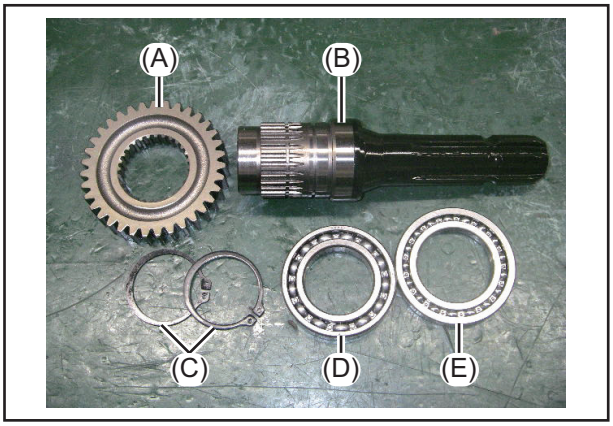

2. Assemble the Bearing #16010 (E) and then the two (2) External Snap Rings 50 (C) on the Rear Power Take Off (PTO) Shaft (B).

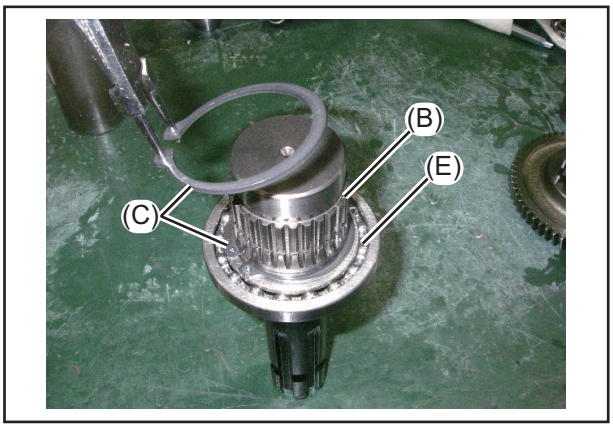

3. Using a pipe etc., press-fit the Rear Power Take Off (PTO) Gear (A) and the Bearing #6009 (D) in that order.

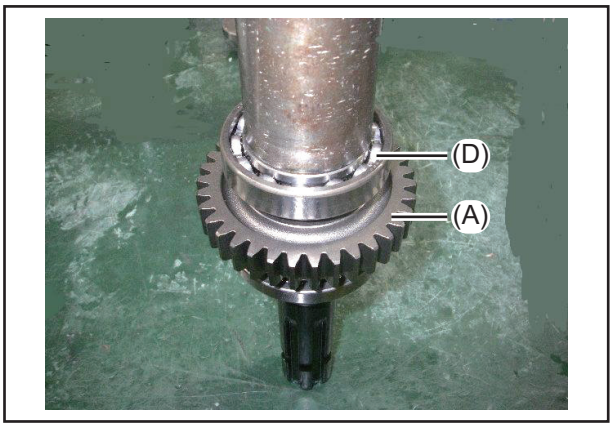

(7) Assembling the Rear Power Take Off (PTO) idle gear

1. Slide the Washer (B) and the Bearing #6204 (C) onto the Rear Power Take Off (PTO) Idle Shaft (A) in place.

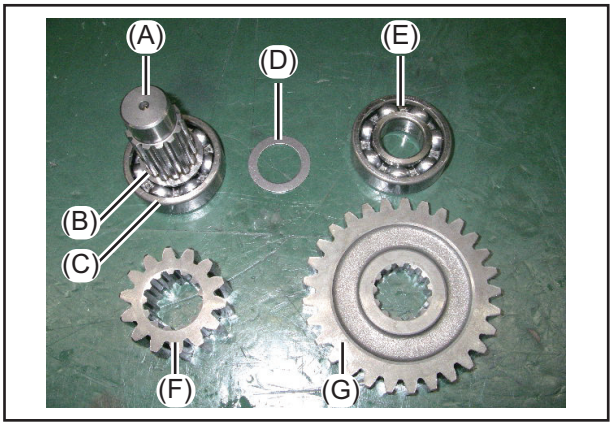

	Name		Name
(A)	Rear Power Take Off (PTO) Idle Shaft	(B)	Washer
(C)	Bearing #6204	(D)	Washer
(E)	Bearing #6204	(F)	14-tooth Rear Power Take Off (PTO) Idle Gear
(G)	35-tooth Rear Power Take Off (PTO) Idle Gear		

2. Slide the 35-tooth Rear Power Take Off (PTO) Idle Gear (G) and the 14-tooth Rear Power Take Off (PTO) Idle Gear (F) onto the Rear Power Take Off (PTO) Idle Shaft (A) in place. Then, using a pipe etc., press-fit the Washer (D) and the Bearing #6204RSH2 (E).

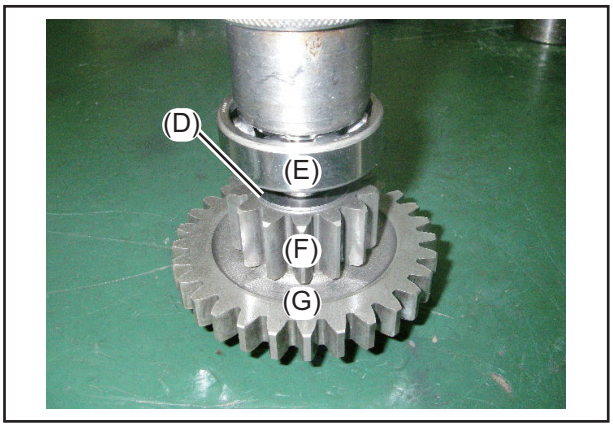

(8) Assembling the Rear Power Take Off (PTO) spline shaft

1.

	Name		Name
(A)	Bearing #6205	(B)	Bearing #6206
(C)	Rear Power Take Off (PTO) Spline Shaft		

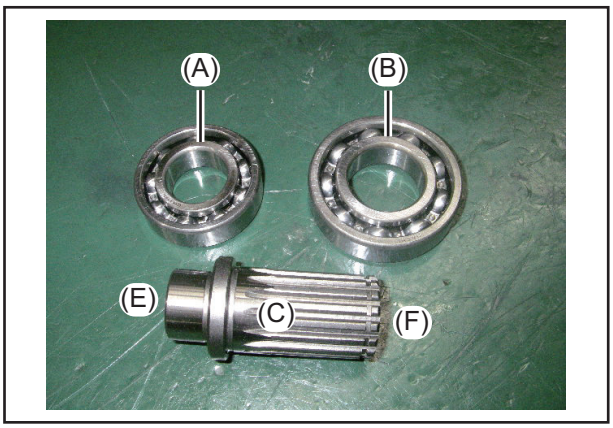

2. Using a pipe etc., press-fit the Bearing #6205 (A) and the Bearing #6206 (B) on the (E) and (F) sides, respectively.

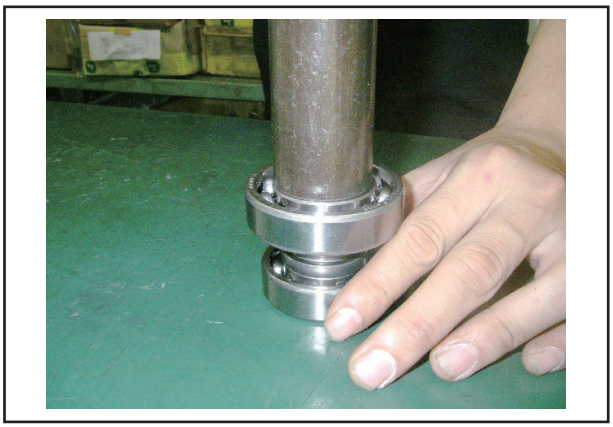

(9) Assembling the Rear Power Take Off (PTO) unit

1.

	Name		Name
(A)	Rear Power Take Off (PTO) Shaft Assembly	(B)	Rear Power Take Off (PTO) Case Cover
(C)	Internal Snap Ring 62	(D)	External Snap Ring 29
(E)	Rear Power Take Off (PTO) Iidle Gear Assembly	(F)	20-tooth Rear Power Take Off (PTO) Gear
(G)	Rear Power Take Off (PTO) Spline Shaft Assembly		

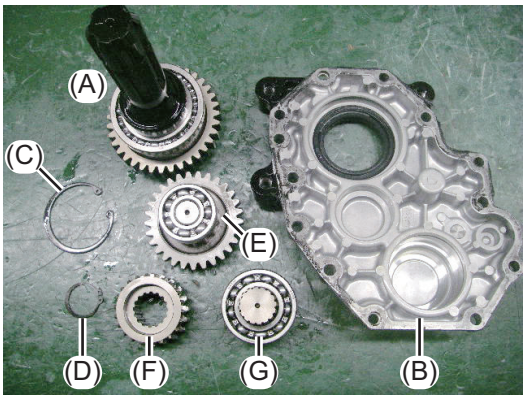

2. Fit the Rear Power Take Off (PTO) Spline Shaft Assembly (G) into the Rear Power Take Off (PTO) Case Cover (B) and secure with the Internal Snap Ring 62 (C).

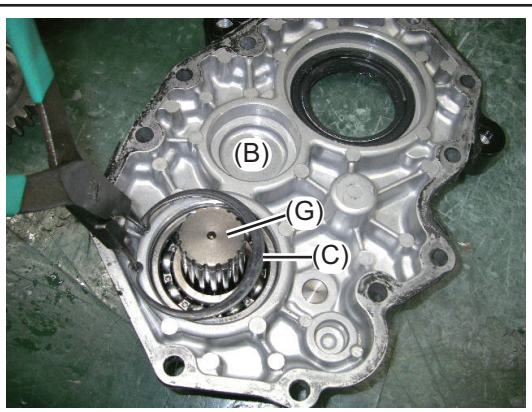

3. While engaging the gears of the Rear Power Take Off (PTO) Shaft Assembly (A), Rear Power Take Off (PTO) Idle Gear Assembly (E) and 20-tooth Rear Power Take Off (PTO) Gear (F), gradually insert the Bearing into the Rear Power Take Off (PTO) Case Cover (B).

NOTE:

- Slightly inserting the Rear Power Take Off (PTO) Shaft Assembly (A) at the beginning helps for easy installation.

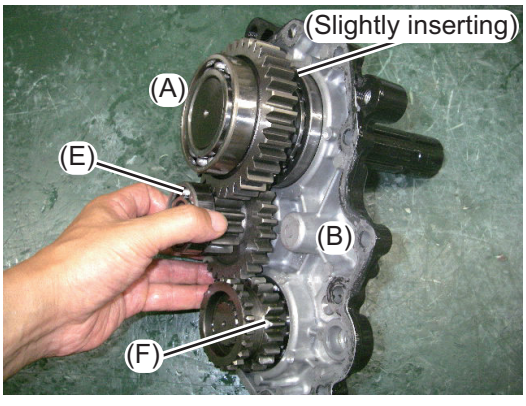

4. Make sure that the Triple Gear has been inserted all the way. Then, secure it with the External Snap Ring 29 (D).

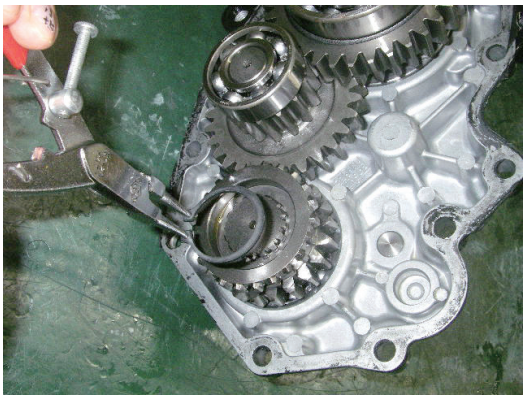

(10) Assembling the Power Take Off (PTO) shift section

1. Assemble the Power Take Off (PTO) shift fork.

	Name		Name
(A)	Power Take Off (PTO) Shift Fork	(B)	Spring
(C)	Steel Ball	(D)	Fork Shaft

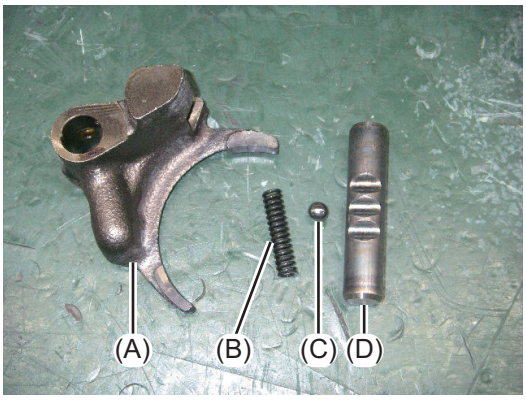

2. Clamp and secure the Power Take Off (PTO) Shift Fork (A) with a vise etc. Put the Spring (B) and Steel Ball (C) in the hole of the Power Take Off (PTO) Shift Fork (A) in that order and press them down with a punch (E) etc.

WARNING

●Wear safety glasses/goggles during this operation.

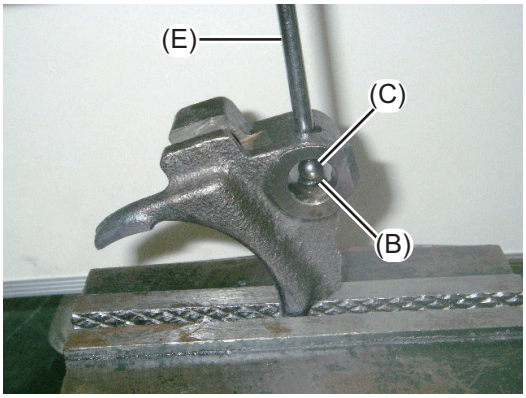

3. When the Steel Ball (C) is put in halfway or more, insert the Fork Shaft (D).

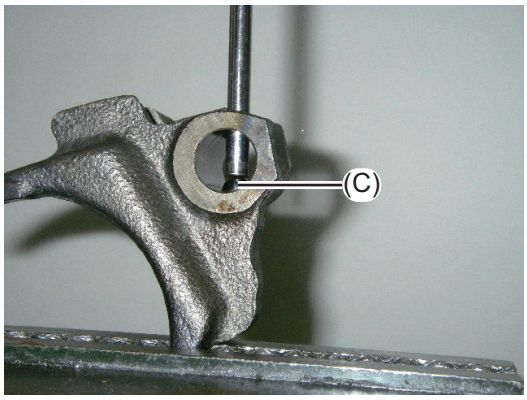

NOTE:

●The Fork Shaft (D) is symmetrical on its front and rear sides. Therefore, there is no orientation for insertion.

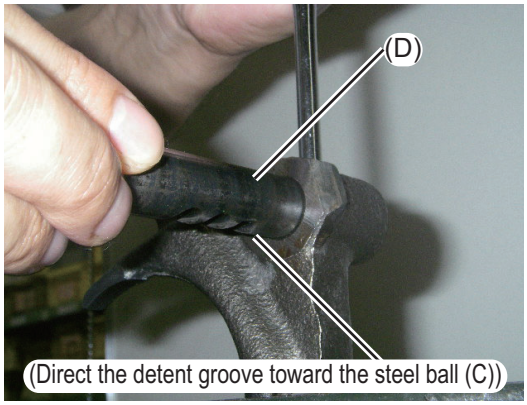

4. The end of the Fork Shaft (D) is tapered. Therefore, push in it with your hand or a plastic hammer, etc. in one stroke.

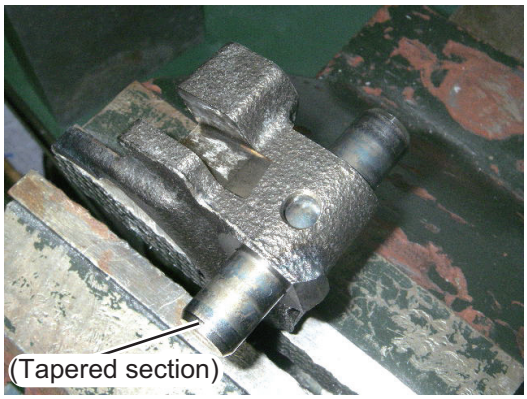

WARNING

- In order to prevent the Steel Ball from flying out, cover the hole with your hand, clean paper towel or shop rag while pushing the Shaft.

5. Align the orientation of the Power Take Off (PTO) Shift Fork Assembly (A) with that of Power Take Off (PTO) Shifter (B), as shown in the photo.

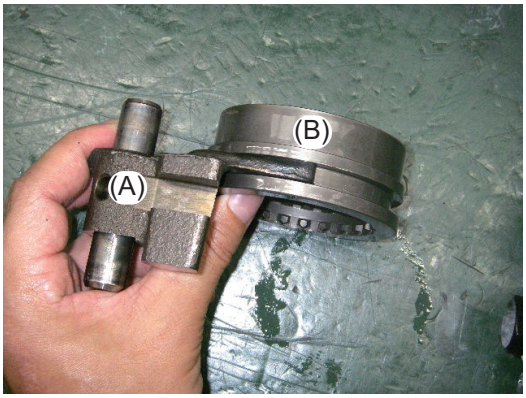

6. Put the Power Take Off (PTO) Shift Shaft Assembly (B) in the Rear Power Take Off (PTO) Case (A).

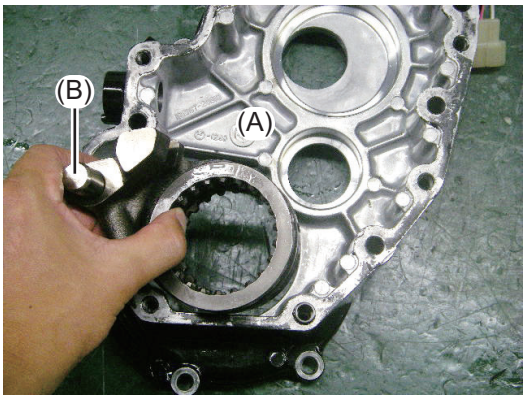

7. Apply transmission oil to the Shift Shaft (A). Insert the Shift Shaft (A) and fit it in the Power Take Off (PTO) Shift Fork Assembly (B).

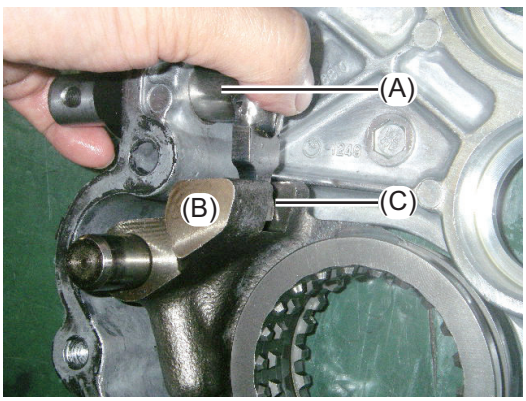

STOP

IMPORTANT

- When assembling, put the arm end of the Shift Shaft (A) in the groove (C) of the Power Take Off (PTO) Shift Fork Assembly (B).
- Before assembling, make sure that the packing (O-Ring) has been installed to the Shift Shaft (A).

8. Insert the Keeper Plate (B) in the groove of the Shift Shaft (A) and secure with the M8 x 30 mm (L: 1.2 in.) Bolt (C).

Bolt tightening torque
16.6 - 21.7 ft·lbs (22.5 - 29.4 N·m)

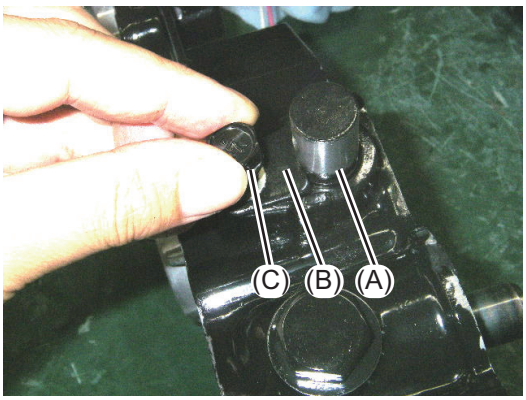

(11) Installing the Rear Power Take Off (PTO) unit

1. Apply Liquid Gasket Sealer to the mating surfaces of the Rear Power Take Off (PTO) Case (A) and Rear Power Take Off (PTO) Case Cover Assembly (B). Join them while turning the Power Take Off (PTO) Shaft (D) so that the Power Take Off (PTO) Shifter splines (C) engage with the Power Take Off (PTO) Shaft (D).

   Liquid Gasket Sealer:
   ThreeBond's TB1216 or its equivalent

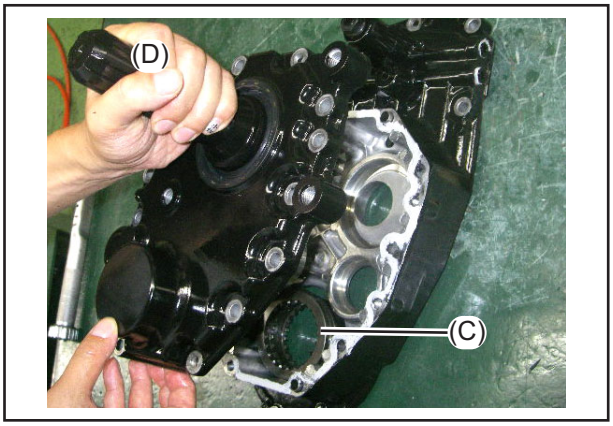

CAUTION

- Tightly hold the Rear Power Take Off (PTO) Shaft (D). Be careful not to get your fingers caught.

2. Tightly join the mating surfaces and tighten the nine (9) M8 x 30 mm (L: 1.2 in.) Bolts.

Bolt tightening torque
16.6 - 21.7 ft·lbs (22.5 - 29.4 N·m)

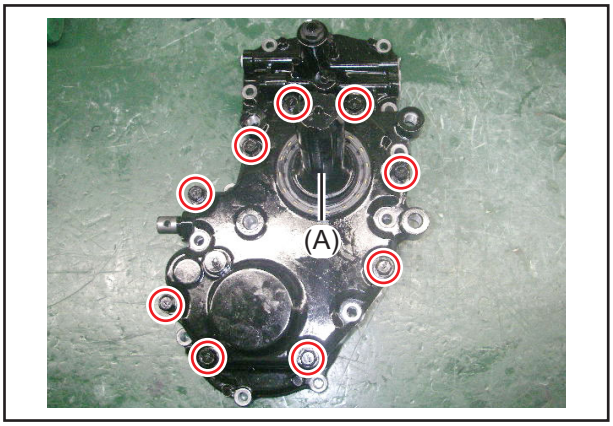

IMPORTANT

- After assembling, make sure that the Rear Power Take Off (PTO) Shaft (A) rotates smoothly.

3. Apply grease to the D-Ring (A) and the O-Ring (B) and fit them in the groove of the Rear Power Take Off (PTO) Case. Apply the following Liquid Gasket Sealer to the mating surface of the Rear Cover.

   Liquid Gasket Sealer:
   ThreeBond's TB1216 or its equivalent

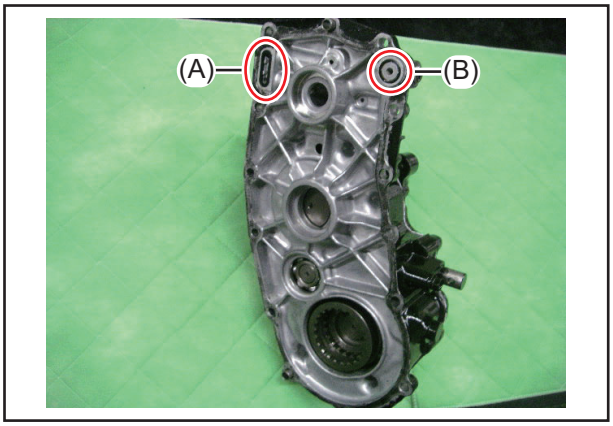

4. Assemble the Rear Power Take Off (PTO) Shaft (A) into the Transmission Case containing the Power Take Off (PTO) Triple Gear while turning the Rear Power Take Off (PTO) Shaft (A).

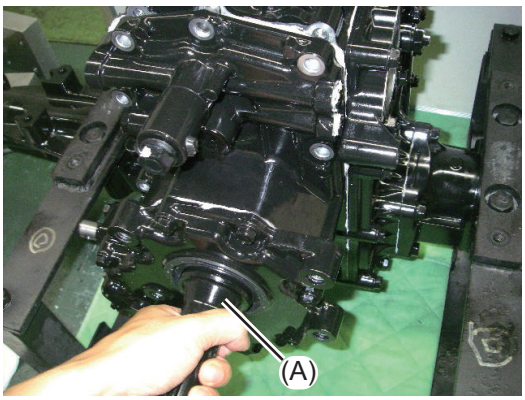

IMPORTANT

- Remove the Piston of the Power Take Off (PTO) Brake in advance.

5. Tightly contact the mating surfaces and tighten the fourteen (14) M8 x 30 mm (L: 1.2 in.) Bolts.

Bolt tightening torque
16.6 - 21.7 ft·lbs (22.5 - 29.4 N·m)

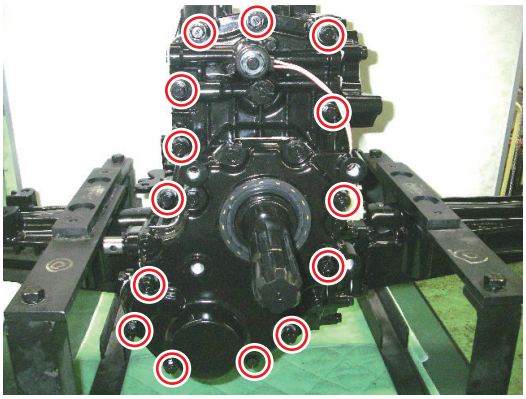

6. Insert the Power Take Off (PTO) Shift Lever (A) and tap in the Spring Pin (B). The Spring Pin (B) should be flush with the Power Take Off (PTO) Shift Lever (A).

NOTE:

- Tapping the Spring Pin (B) into the Power Take Off (PTO) Shift Lever (A) in advance helps the Spring Pin (B) to be easily tapped in.

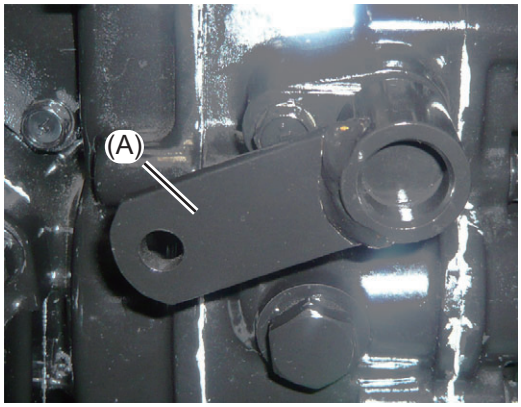

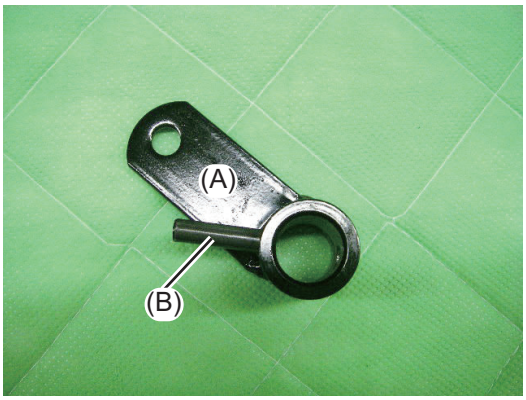

7. Make sure that using the Power Take Off (PTO) Shift Lever (A) can smoothly perform gear changing.

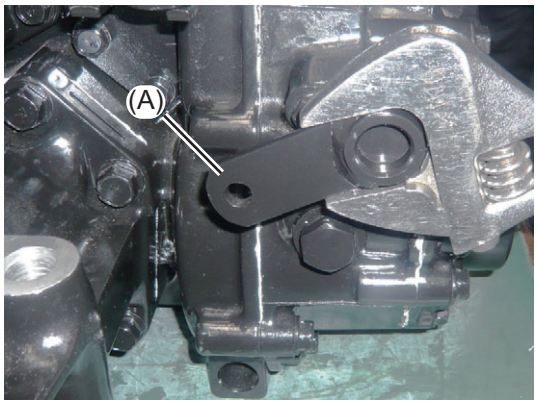

(12) Assembling the Power Take Off (PTO) brake

1.

	Name		Name
(A)	Spring A	(B)	Spring B
(C)	Spring C	(D)	Piston
(E)	Power Take Off (PTO) Brake Cover		

Power Take Off (PTO) Brake Kit
CY-1A7050-26080

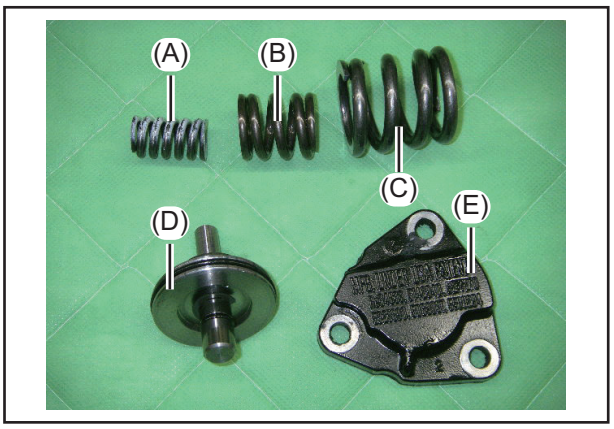

NOTE:

- The parts (A), (B), (C) and (D) are supplied only in an assembly.

2. Apply transmission oil to the O-Ring (A) and then insert the Piston (B) into the Transmission Case.

IMPORTANT

- Be careful about the orientation of the Piston (B).

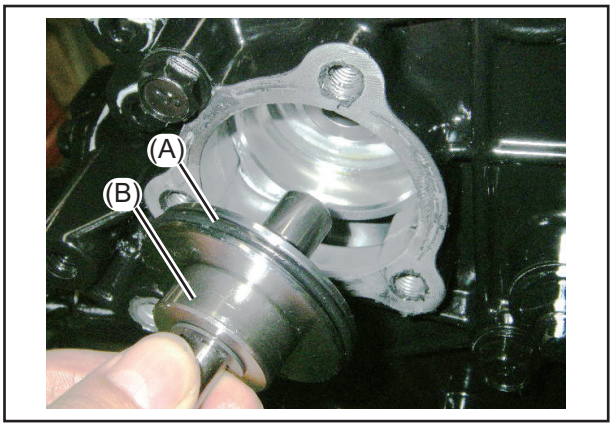

3. Stack the three (3) Springs (A), (B) and (C) and insert them.

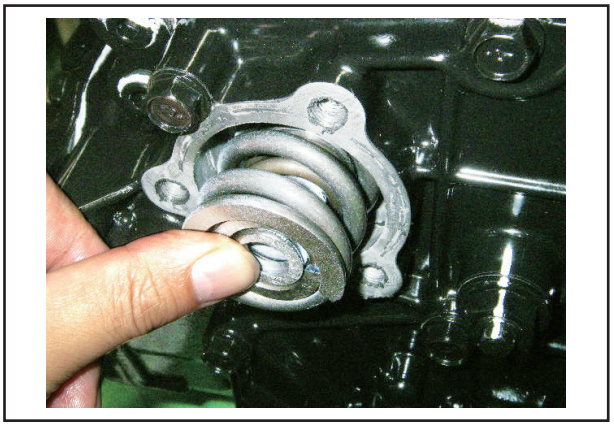

4. Apply Liquid Gasket Sealer to the mating surface. While pushing in the Power Take Off (PTO) Brake Cover, tighten the three (3) M8 x 25 mm (L: 1.0 in.) Bolts down evenly.

   Liquid Gasket Sealer:
   ThreeBond's TB1216 or its equivalent

Bolt tightening torque
16.6 - 21.7 ft·lbs (22.5 - 29.4 N·m)

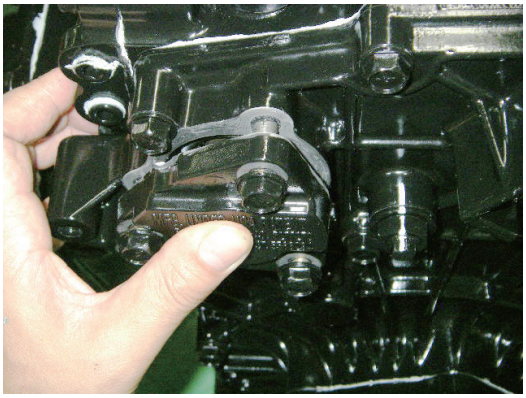

5. Install the Stud (A) for mounting the Neutral Return Spring the side of the Power Take Off (PTO) Brake Cover.

Stud tightening torque
16.6 - 21.7 ft·lbs (22.5 - 29.4 N·m)

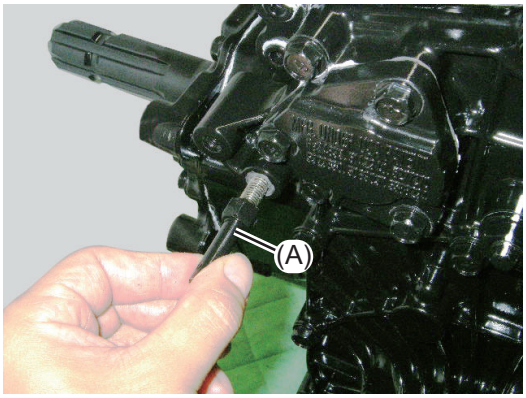

(13) Assembling the solenoid valve for the Power Take Off (PTO) clutch

1.

	Name		Name
(A)	Copper gasket	(B)	Solenoid Body
(C)	Packing	(D)	Nut
(E)	Shim	(F)	Spring
(G)	Valve A	(H)	Valve B
(I)	Armature		

Solenoid Assembly
CY-192159-27700

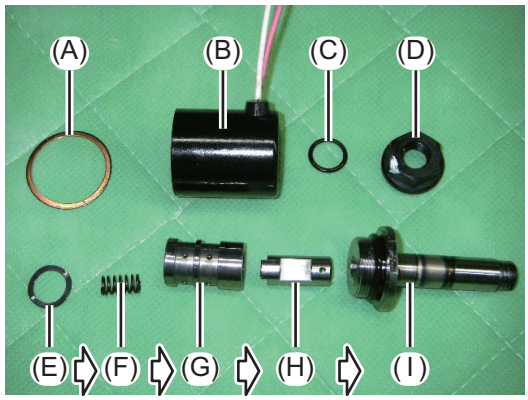

STOP **IMPORTANT**

- Make sure that the O-Ring P18.0 has been installed to the Armature (I).

NOTE:

- The parts (B), (H) and (I) are supplied only in an assembly.

2. Apply transmission oil to the parts shown in the lower line of the above photo. Insert them in the arrow order and tighten the Armature (I).

Armature tightening torque
15.2 - 16.6 ft·lbs (20.6 - 22.5 N·m)

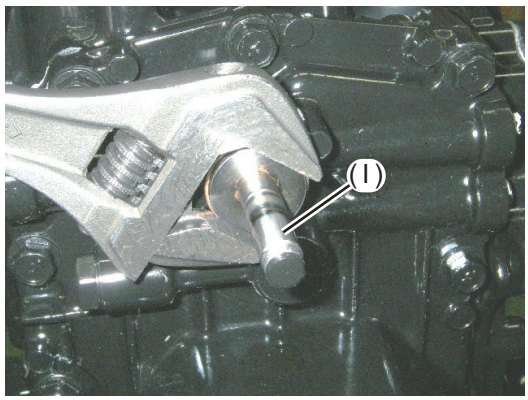

3. Install the parts (A), (B) and (C) in that order and tighten the Nut (D).

Nut tightening torque
2.9 - 4.4 ft·lbs (3.9 - 5.9 N·m)

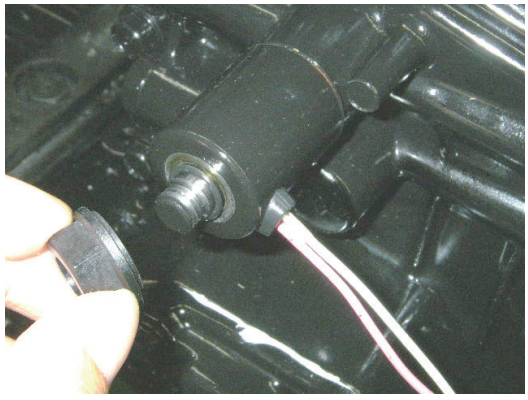

(14) Assembling the Power Take Off (PTO) relief valve

Apply transmission oil to the parts shown in the photo.
Insert them in the arrow order and tighten the Plug (A).

Plug tightening torque
10.8 - 11.6 ft·lbs (14.7 - 15.7 N·m)

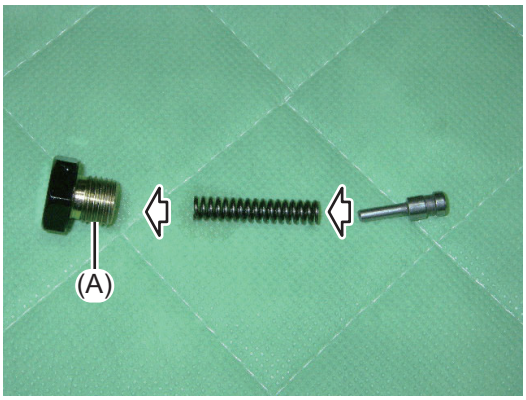

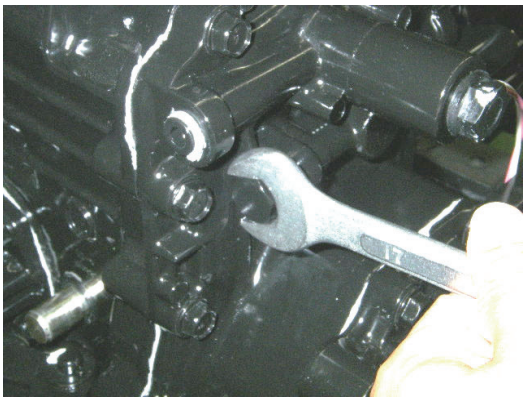

6-2-3 Assembling the Hydro Static Transmission (HST)

(1) Assembling the front drive case

1.

	Name		Name
(A)	Front Shift Collar	(B)	Steel Ball 1/4
(C)	Spring, 21.2	(D)	Bearing #6005
(E)	Sleeve	(F)	Front Drive Shaft

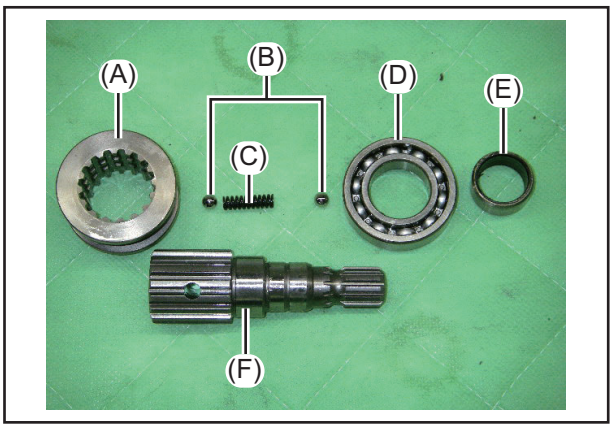

2. Using a pipe etc., press-fit the Bearing #6005 (D) and the Sleeve (E) on the Front Drive Shaft (F).

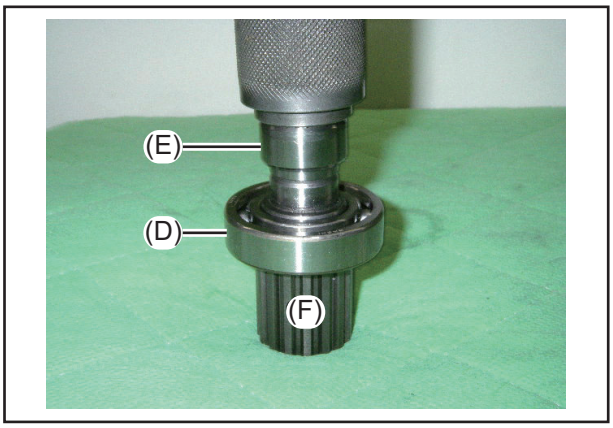

3. Put the Spring (C) in the hole of the Front Drive Shaft (F) and sandwich the Spring (C) between the Steel Balls (B). While pressing the Spring (C) with your fingers, gradually slide the Front Shift Collar (A) onto the Front Drive Shaft (F).

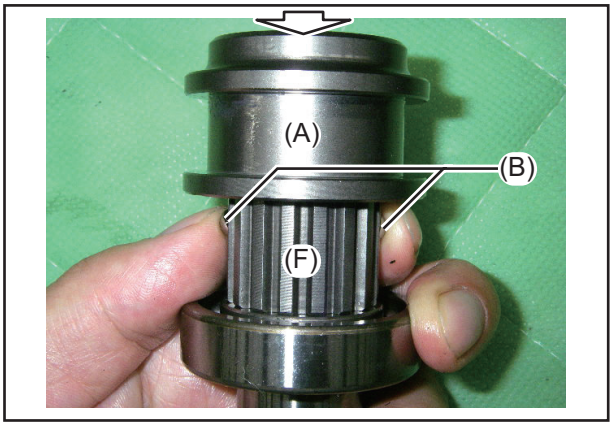

WARNING

- The Steel Balls (B) could fly out. Therefore, wear safety glasses/goggles etc. during this operation.

NOTE:

- Be careful not to allow the Steel Ball (B) to fly out. Tap with a plastic hammer for easy assembling.

CAUTION

- Be careful not to get your fingers caught when assembling.

4. Press-fit the Oil Seal TC254008 (G) into the Front Drive Case and insert the 36 x 46 x 1 Washer (H).

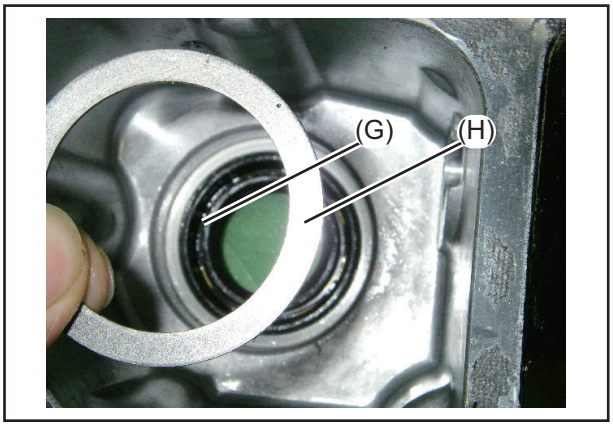

IMPORTANT

- Apply grease to the Oil Seal lip.

5. Insert the Shift Shaft (I) into the Front Drive Case. Apply grease to the O-Ring (J). Moreover, insert the Shift Block (K).

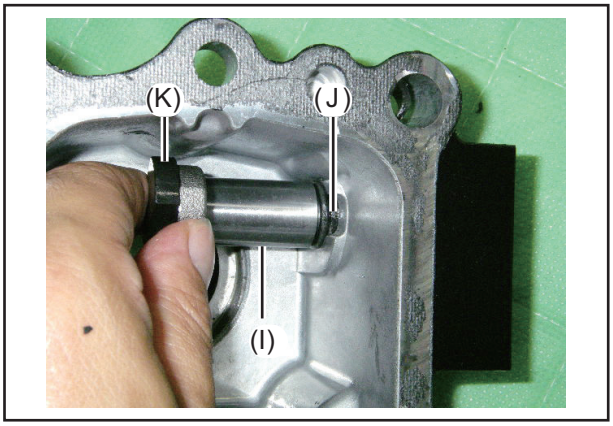

6. While fitting the Shift Block (K) in the Front Shift Collar (A), gradually insert the Shaft (L).

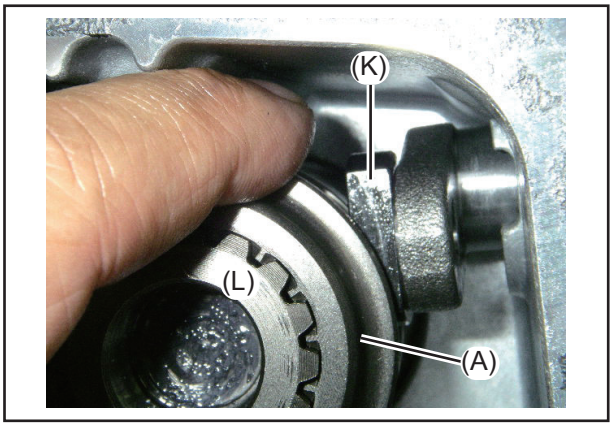

7. Fit the Clutch Collar (M) in the groove of the Shift Shaft (I) from outside the Front Drive Case and tighten the M8 x 16 mm (L: 0.6 in.) Bolt.

Bolt tightening torque
16.6 - 21.7 ft·lbs (22.5 - 29.4 N·m)

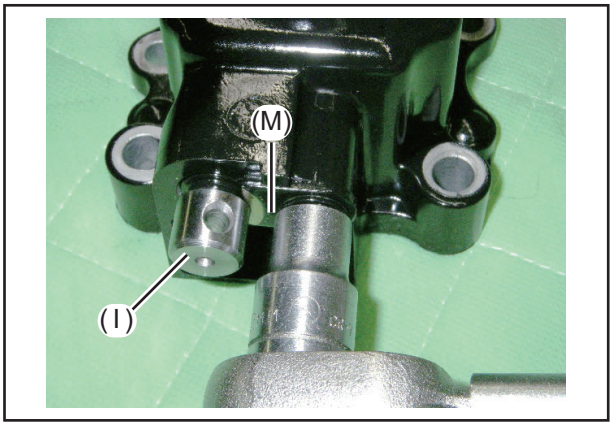

8. Insert the two (2) Locating Pins (N) in the Front Drive Case and install the Gasket (O).

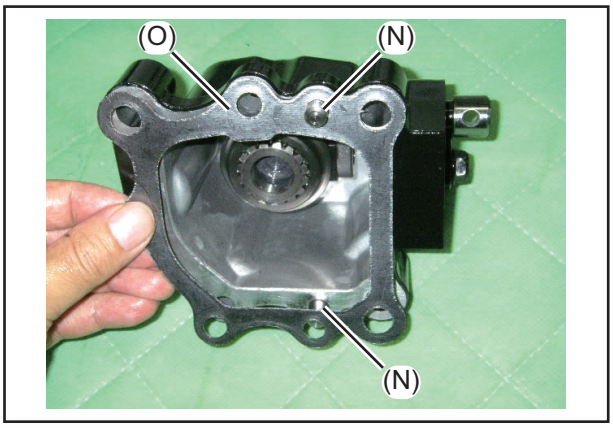

(2) Assembling the motor case

1.

	Name		Name
(A)	Motor Case Side Cover with Gasket, two Pins and Bushing	(B)	Hydro Static Transmission (HST) Motor Block
(C)	Bolt, M8 x 30 mm (L: 1.2 in.)	(D)	Motor Case
(E)	External Snap Ring 16	(F)	Washer, 17 x 32 x 1
(G)	Oil Seal TC16266	(H)	Control Arm
(I)	Swash Plate	(J)	Thrust Bearing
(K)	Hydro Static Transmission (HST) Motor Shaft	(L)	Bearing #6004U
(M)	Internal Snap Ring 20	(N)	Internal Snap Ring 42

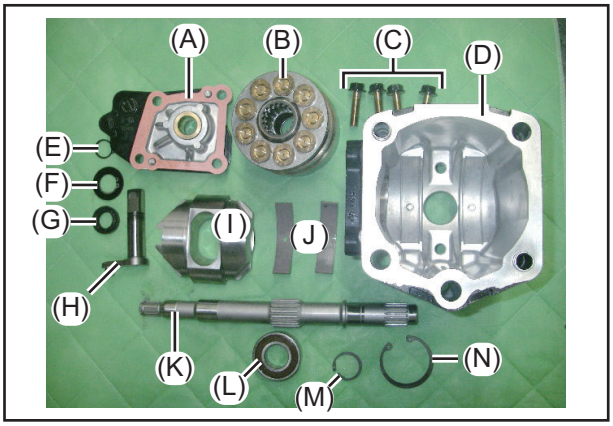

IMPORTANT

- Be careful not to damage the Hydro Static Transmission (HST) Motor.

2. Slide the Bearing #6004U (L) onto the Hydro Static Transmission (HST) Motor Shaft (K) in place and fit the External Snap Ring 20 (M).

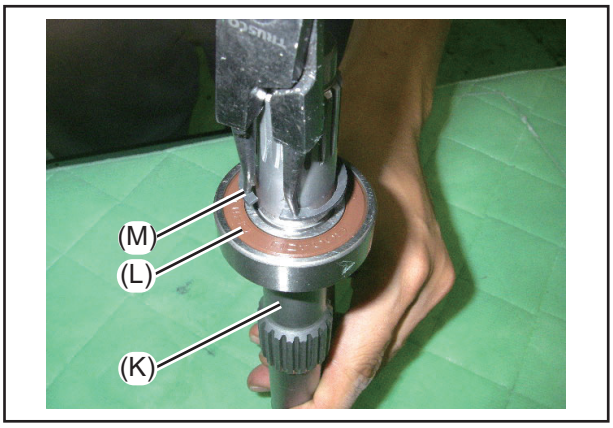

IMPORTANT

- Install the Bearing #6004U (L) with its seal facing toward the shaft end.

3. Thoroughly clean each component of the Hydro Static Transmission (HST) Motor with light oil before assembling.

	Name		Name
(O)	Hydro Static Transmission (HST) Motor Piston	(P)	Plate
(Q)	Hydro Static Transmission (HST) Cylinder Block with inner part	(R)	Pin
(S)	Retainer Guide		

Cylinder Block Assembly
CY-168HK0-29600

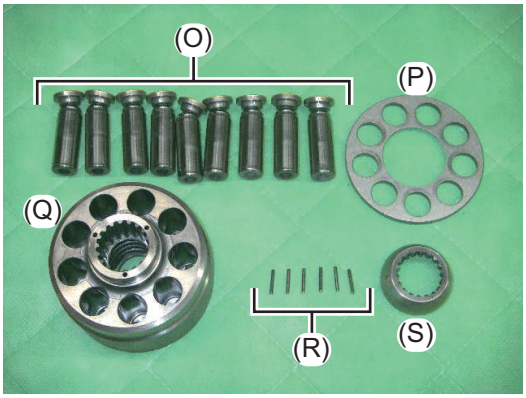

NOTE:

- The parts (O), (P), (Q) and (S) are supplied only in an assembly.

4. Install the six (6) Pins (two (2) per hole) (R) in Hydro Static Transmission (HST) Cylinder Block (Q) and cover with the Retainer Guide (S).

IMPORTANT

- Align the spline phases in advance.

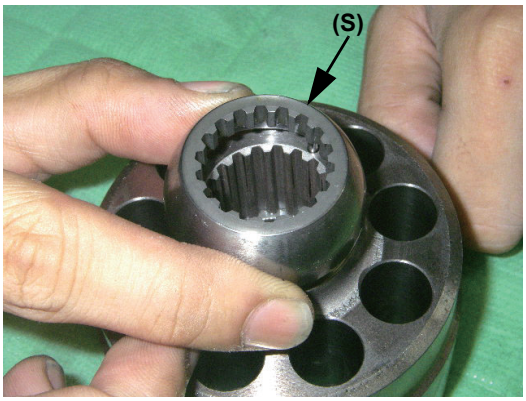

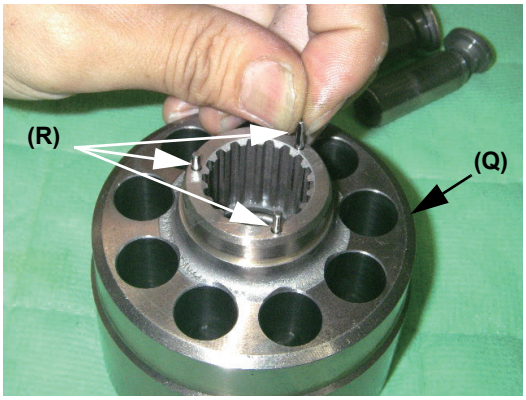

5. Place the nine Hydro Static Transmission (HST) Motor Pistons (O) in the Plate (P).



IMPORTANT

- Be careful not to damage the Hydro Static Transmission (HST) Motor Piston Shoes (a) and the Hydro static Transmission (HST) Motor Pistons (O).

- The plate has its orientation. Therefore, be careful to assemble it, see the illustration right.

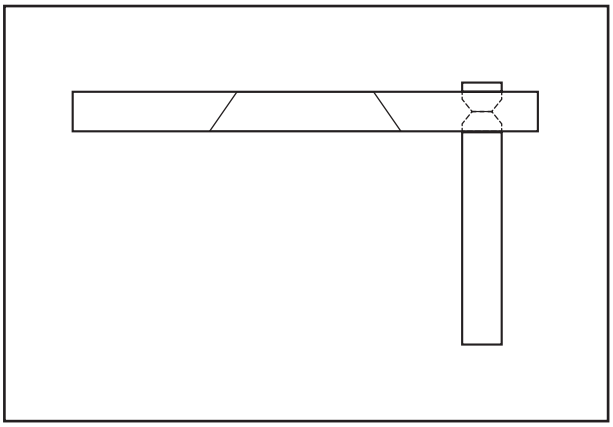

6. Apply transmission oil to the Bushing of the Motor Case Side Cover (A) and then insert the Control Arm (H). Apply grease to the lip of the Oil Seal TC16266 (G) and press-fit the Oil Seal TC16266 (G).

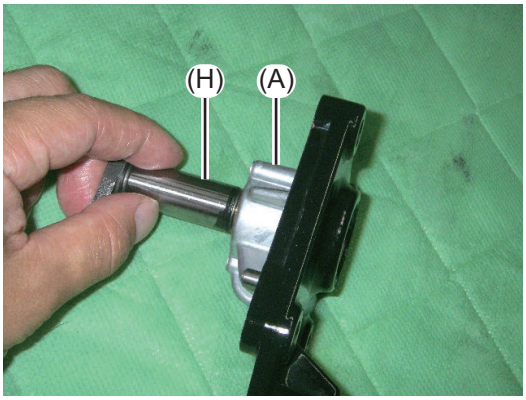

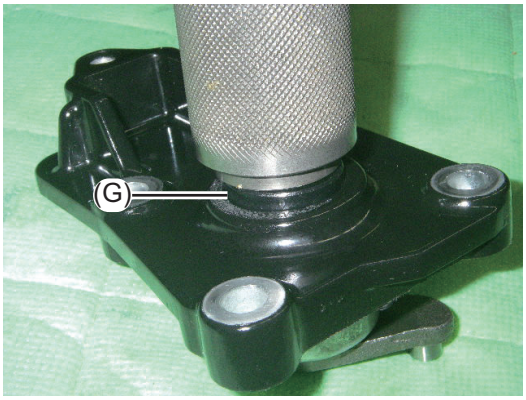

7. Put in the 17 x 32 x 1 washer (F) and secure it with the External Snap Ring 16 (E). Make sure that the Control Arm (H) rotates smoothly. Finally, insert the Shift Block (T).

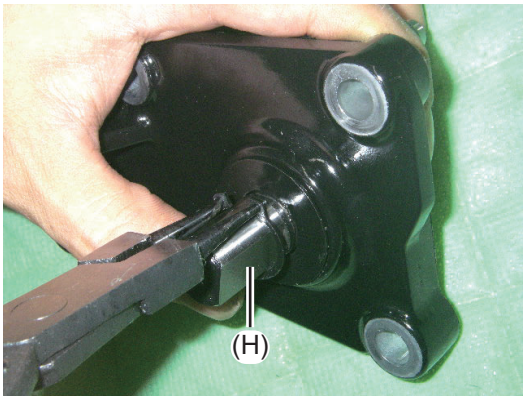

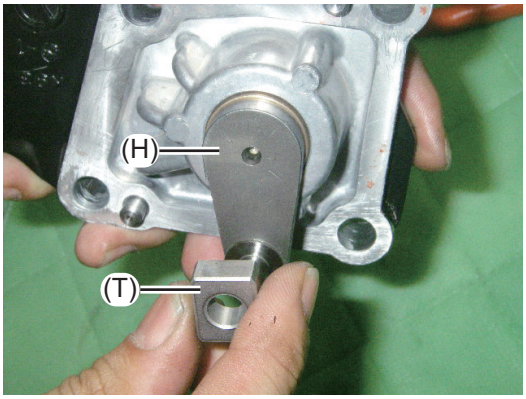

8. Insert the Hydro Static Transmission (HST) Motor Shaft (K) into the Motor Case (D) and secure with the External Snap Ring 42 (N).

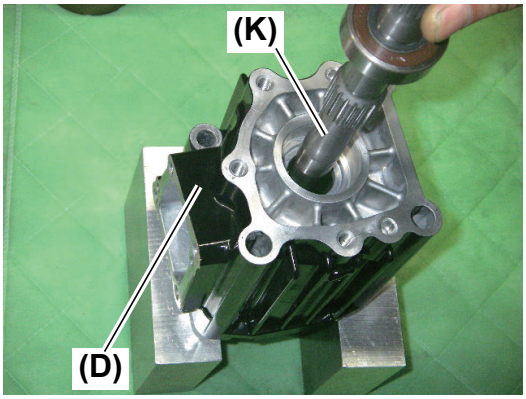

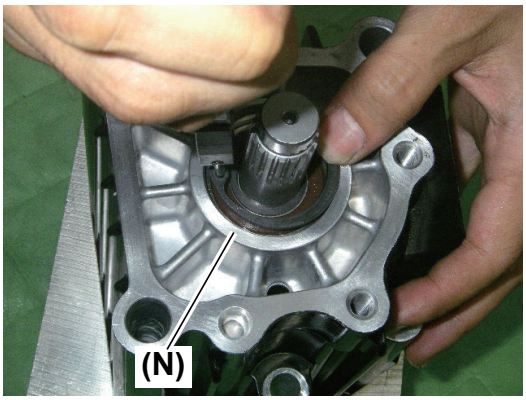

9. Apply grease to the case side of the Thrust Bearing (C). Align the Pins (a) of the Case, with the holes in the Thrust Bearings (b), and install the bearings into place.

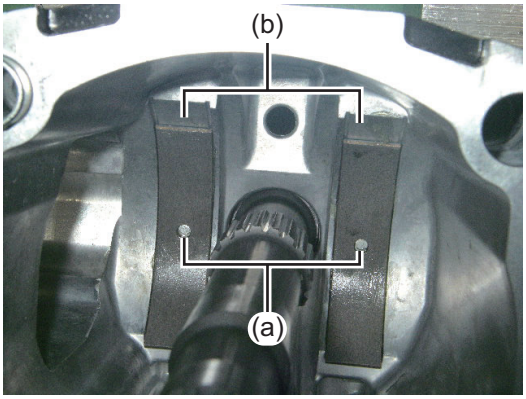

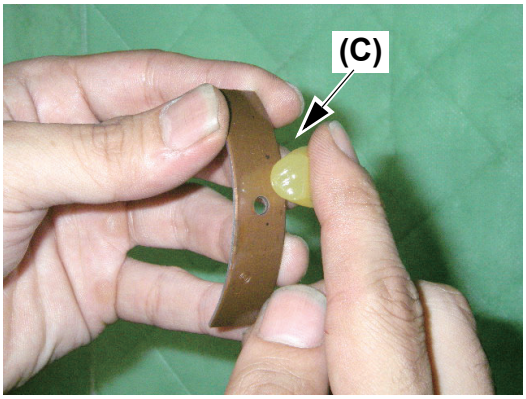

10. Apply transmission oil to the sliding surfaces of the Thrust Plate (a) and Swash Plate (I). Join them and insert into the case. By moving them upward and downward, make sure that they have been fit in the Thrust Bearings.

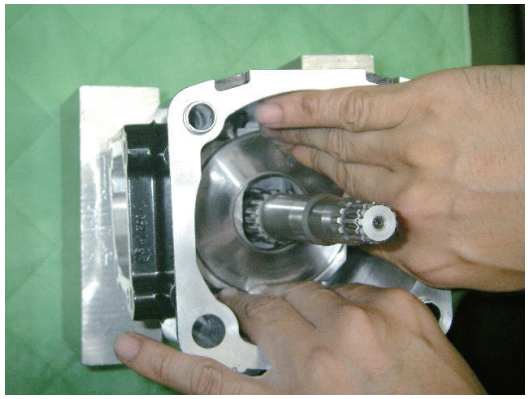

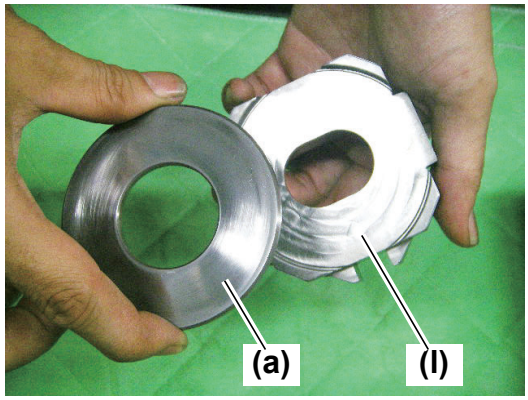

NOTE:

- Make the groove on the side of the Swash Plate position on the Side Cover side.

11. Insert the Hydro Static Transmission (HST) Cylinder Block Assembly (a) into the Motor Case (D). To prevent the Swash Plate (I) from coming out, place the Motor Case (D) in such a way that it faces upward.

    While being careful not to allow the Hydro Static Transmission (HST) Motor Piston and retainer guide of the Hydro Static Transmission (HST) Cylinder Block Assembly (a) to come out, align the splines (b) of the Hydro Static Transmission (HST) Motor Shaft and insert the Hydro Static Transmission (HST) Cylinder Block Assembly (a).

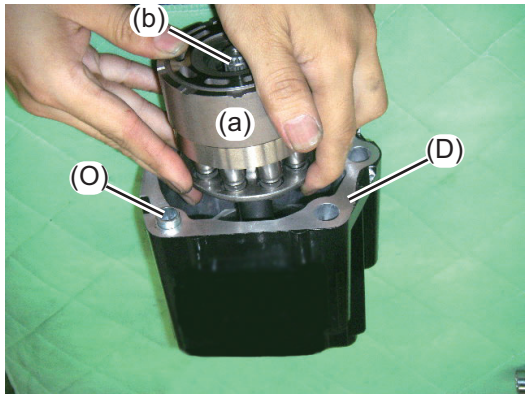

12.As shown in the photo on the right, the protrusion of the (a) section of the Hydro Static Transmission (HST) Cylinder Block Assembly is about 0.039 in. (1 mm) in length.

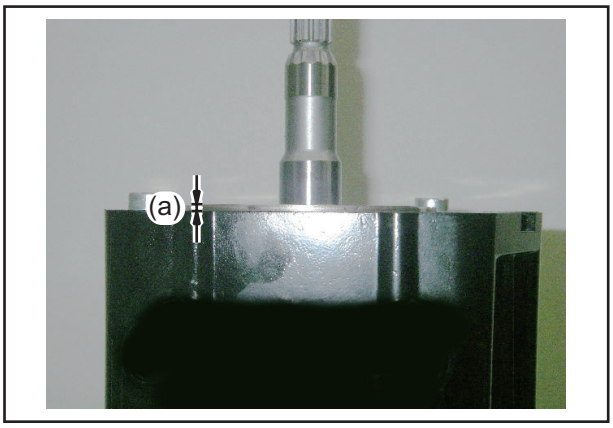

IMPORTANT

- If the protrusion of the (a) section exceeds about 0.039 in.(1 mm) in length, reassembling is required.
- Make sure that the Thrust Bushings (J) has not come off from the Swash Guide.

NOTE:

- As shown in the photo right, it is normal that the (a) section slightly projects.

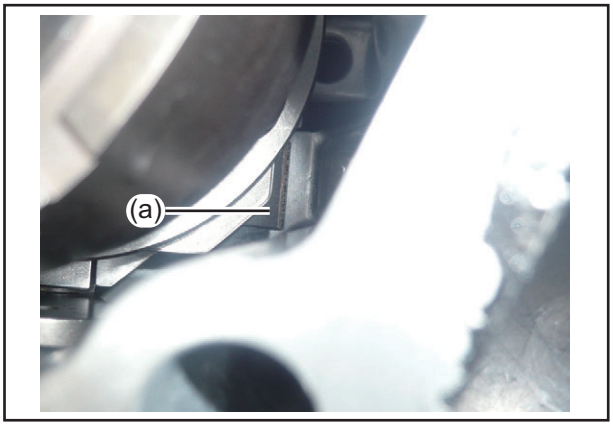

13. While holding down the Hydro Static Transmission (HST) Cylinder Block Assembly (a), turn the Motor Case Side Cover (A) on its side. After ensuring that the two (2) Locating Pins and the packing have been installed, install the Shift Block (b) so as to fit it in the groove (c) on the side of the Swash Plate (I).

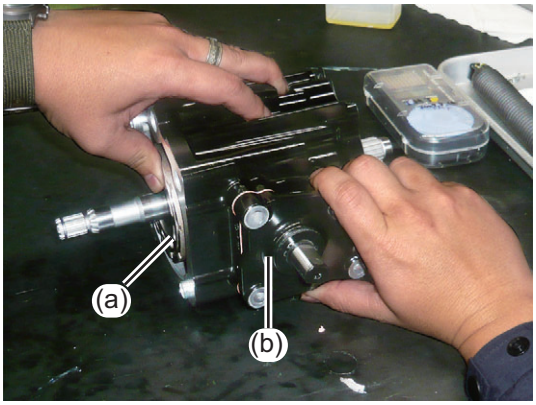

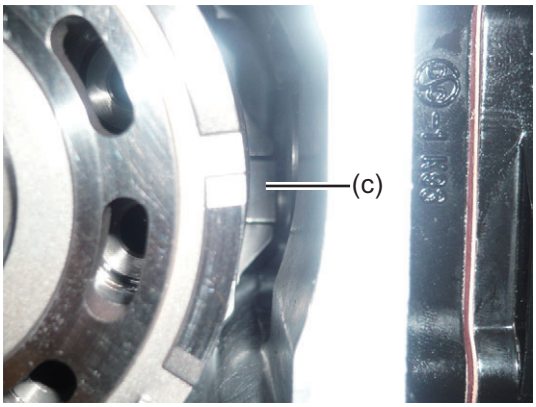

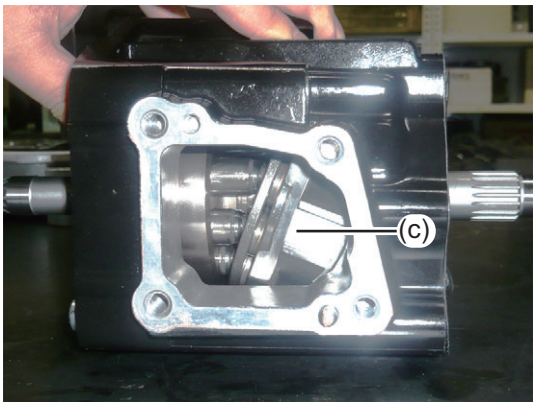

14. Tighten the four (4) M8 x 30 mm (L: 1.2 in.) Bolts (D).

Bolt tightening torque
16.6 - 21.7 ft·lbs (22.5 - 29.4 N·m)

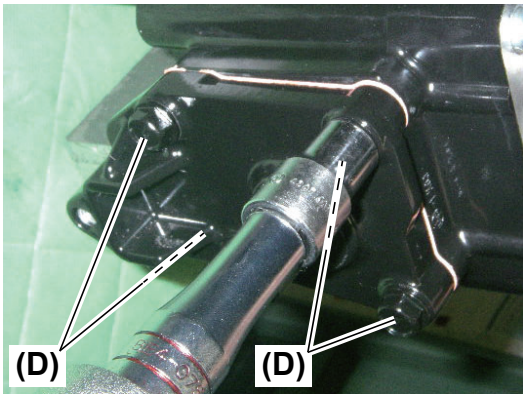

IMPORTANT

- To prevent the Swash Plate and Thrust Bearings from rising, hold down the Hydro Static Transmission (HST) Cylinder Block Assembly (a) during this operation.

15. Another worker should press-fit the two Needle Bearings (a) and two (2) Pins (b) on both the Pump (upper) and Motor (lower) sides of the Center Plate.

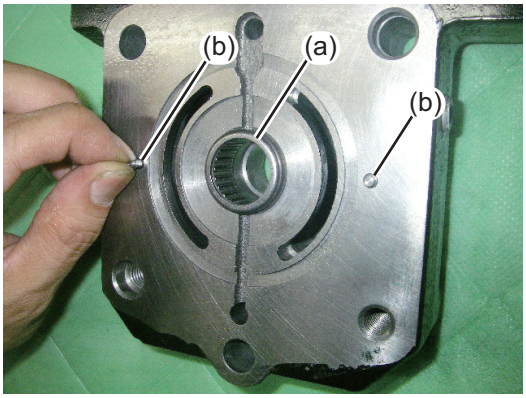

IMPORTANT

- If the above work is carried out by one person, the Hydro Static Transmission (HST) Cylinder Block Assembly that has been assembled in step 6-2 Assembling Procedure cannot be held down so that the Thrust Bearings (J) can get out of place.

16. The Valve Plate (A) is for the pump and the Valve Plate (B) is for the Motor. Do not confuse them.

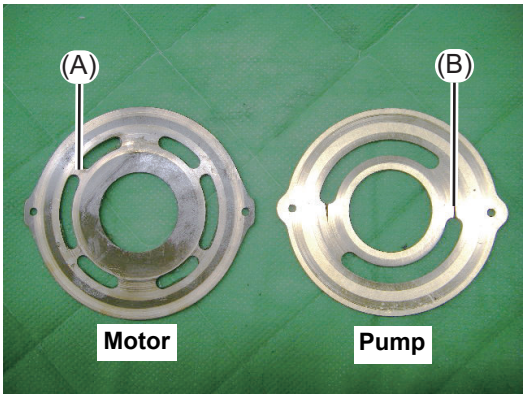

17. Fit the Valve Plate (A) to the Center Plate and apply transmission oil to them. In the same way, apply grease to the Hydro Static Transmission (HST) Cylinder Block side.
Use the guide pins to align the Valve Plate to the Center Plate (B).

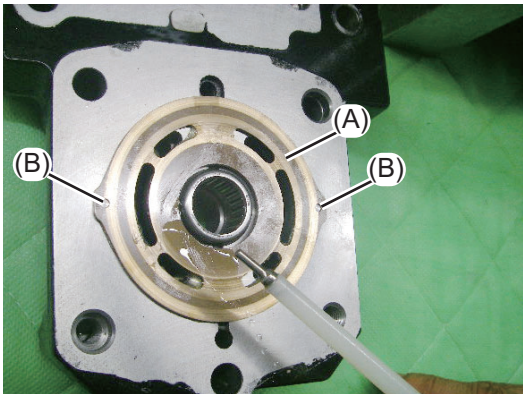

18. Install the Motor Case (b) to the Center Plate (a).

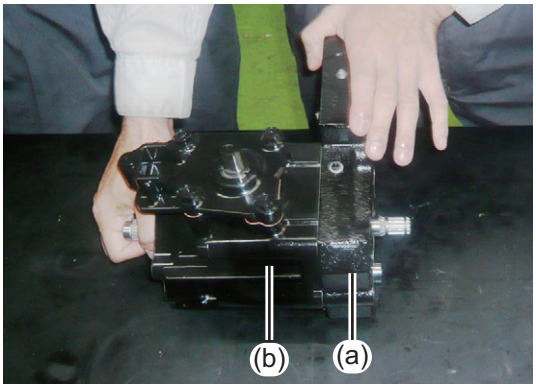

19. It is OK that there is a clearance of about 0.039 in. (1 mm) between the Center Plate and the Motor Case. Temporarily tighten the one Bolt.

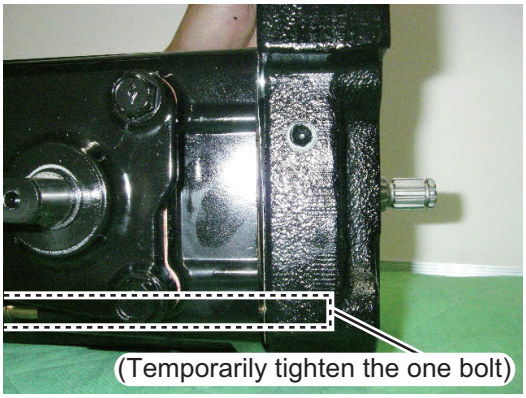

IMPORTANT

- If the above bolt is not tightened temporarily, the Swash Plate, the Thrust Bearings, etc. may fall off.

20. Slide the Spacer (b), grooved side first and the Splined Collar (c) with the low chamfered section on the splined step facing outside away from the Spacer (b) section at the end of the Hydro Static Transmission (HST) Motor Shaft (K). Install the two (2) Locating Pins and the Gasket to the Housing (d).

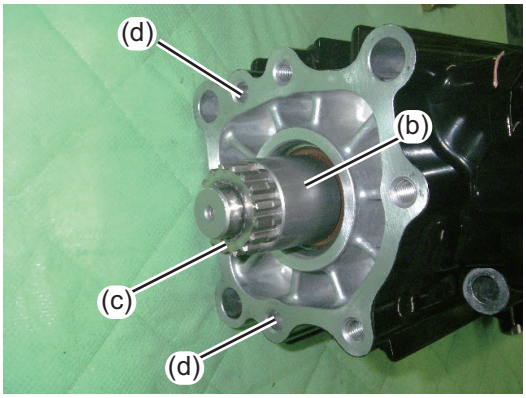

IMPORTANT

- The front and rear faces of the Spacer (b) are not the same. The grooved side should be put in the case.

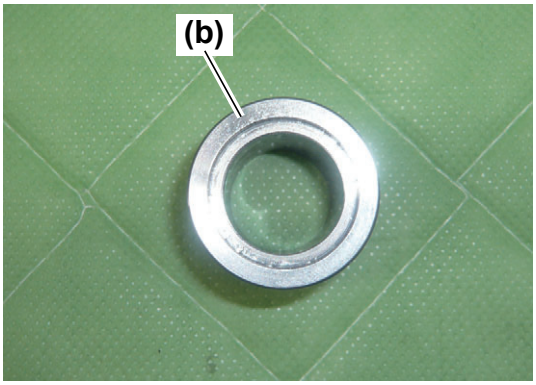

21. Install the Font Drive Case Assembly and tighten the three (3) M8 Bolts.

Bolt tightening torque
16.6 - 21.7 ft·lbs (22.5 - 29.4 N·m)

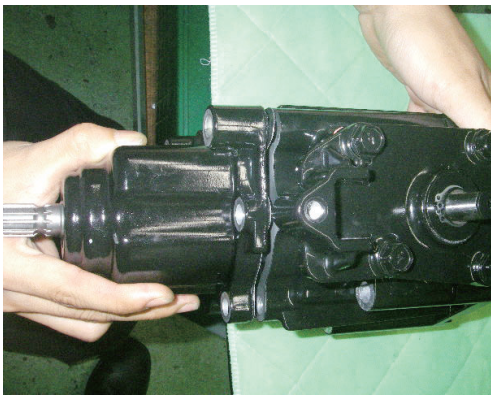

ATTENTION

- Work while holding down the Cylinder Block Assembly (a) so as to prevent it from flying out. Operation in steps 6-2 Assembling Procedure and 6-2 Assembling Procedure is allowed even after the front Drive Case Assembly is assembled.

(3) Assembling the center plate

1. Slide the Bearing #6303RSH2 (b) and the Pinion Gear (c) onto the Motor Shaft end (a) and install the C-Circlip (d).

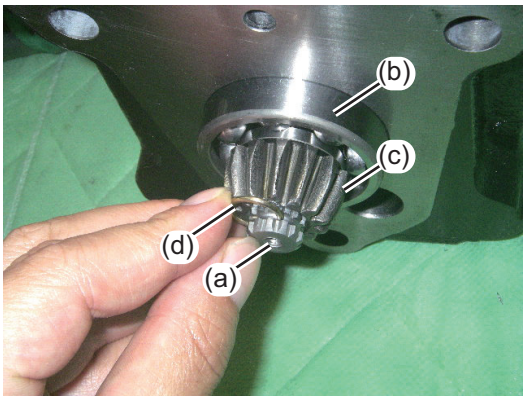



IMPORTANT

- When pressing in the round Circlip (d), be careful not to damage the Pinion Gear (c).

NOTE:

- The Pinion Gear (c) has about 0.039 in. (1 mm) of play.

2. Install the two (2) Third Check Valves (a). These valves are just pressed in and are held by the O-Rings and Screens/Strainers in the Tranmission Housing.

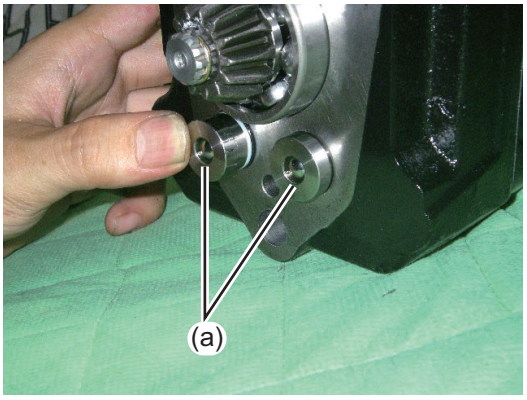



IMPORTANT

- To avoid damaging the O-Rings, apply transmission oil to them.

NOTE:

- The Third Check Valves (a) are furnished with the center Case assembly only. They are not available separately.

3. Install the two (2) Pins (a) and the Valve Plate (B) to the Center Plate face for mating with the Transmission and apply transmission oil to the surface of the Valve Plate (B).

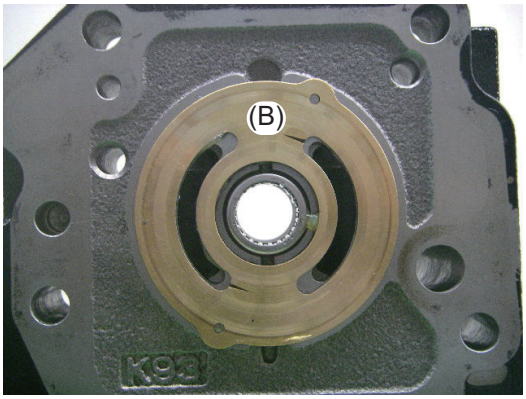

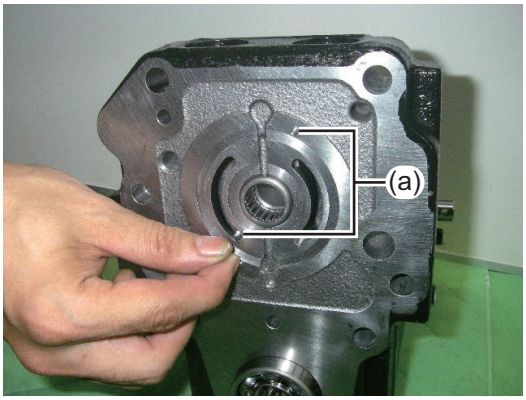

4. Apply transmission oil to the Thrust Bearing (b) and Thrust Plate (c). Then install them to the Swash Plate (a) of the Transmission.

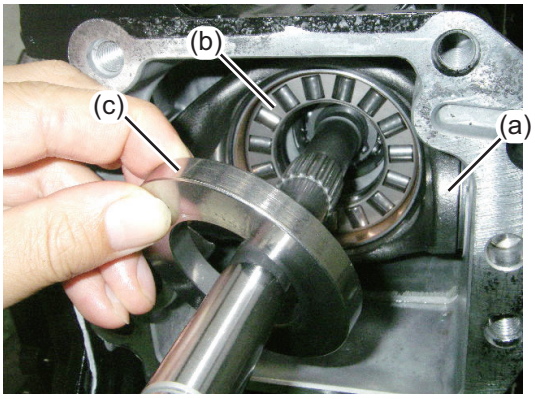

5. Slide the Hydro Static Transmission (HST) Pump Cylinder Block Assembly (b) onto the Pump Shaft (a). Align the splines (c) to slide the Hydro Static Transmission (HST) Pump Cylinder Block Assembly (b) all the way in.

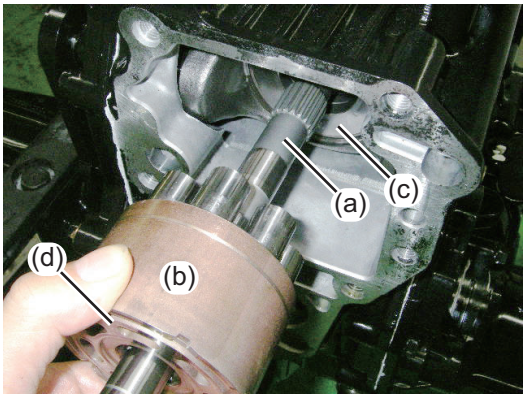

STOP **IMPORTANT**

- Apply transmission oil to the back side (d) of the Hydro Static Transmission (HST) Pump Cylinder Block Assembly (b).

6. The Hydro Static Transmission (HST) Pump Cylinder Block Assembly (a) projects about 0.39 in. (10 mm) from the Transmission Case surface.

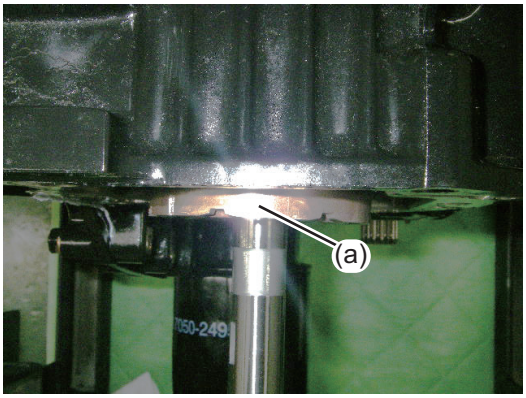

7. Apply grease to the two (2) Strainers (a) and fit them into the Transmission Case with their convex sides facing into the Transmission Case.

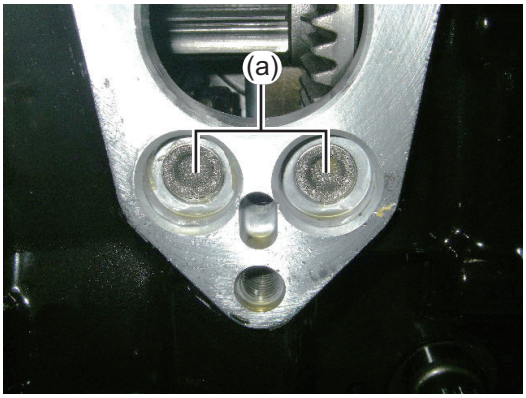

8. Place the Gasket on the mating surface of the Center Case and install the Locating Pin in place. Then join the Center Case with the Transmission Case.

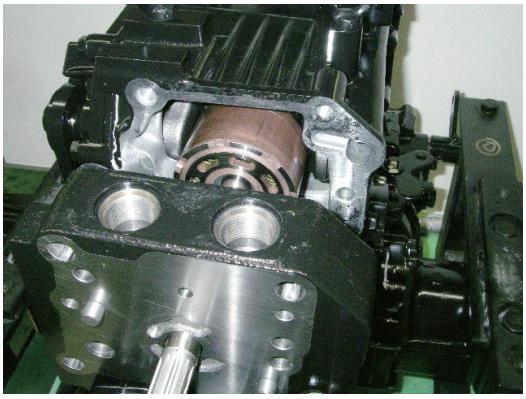

9. When joined, the Cylinder Block projects about 0.39 in. (10 mm) (a) from the mating surface.

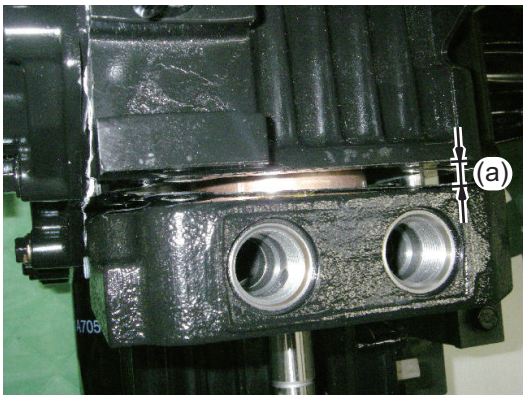

10. Push in the upper part of the Center Plate by hand and tighten the Center Plate Bolts finger tight.

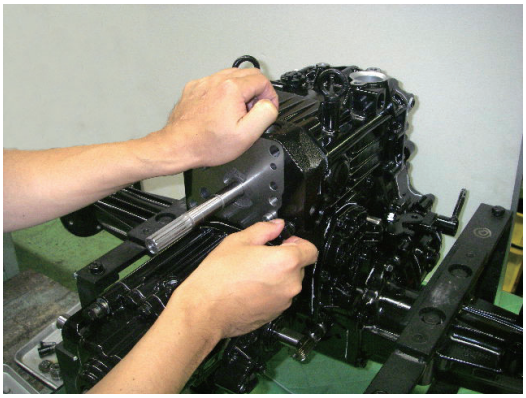

IMPORTANT

- Never force or use a hammer to install.

11. Once the mating surfaces contact each other, tighten the five (5) Bolts (including one bolt that was temporarily tightened in step 6-2 Assembling Procedure of "5-161").

Bolt tightening torque
32.5 - 43.4 ft·lbs (44.1 - 58.8 N·m)

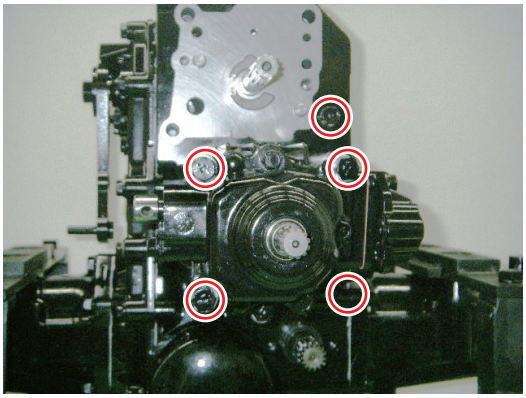

IMPORTANT

- Never force to tighten.

(4) Assembling the hydraulic power pump

1. Install the Trochoid on the Pump Shaft.

	Name		Name
(A)	Key, 8 x 3.2	(B)	Inner Rotor
(C)	Outer Rotor		

Rotor set
1A6370-31000

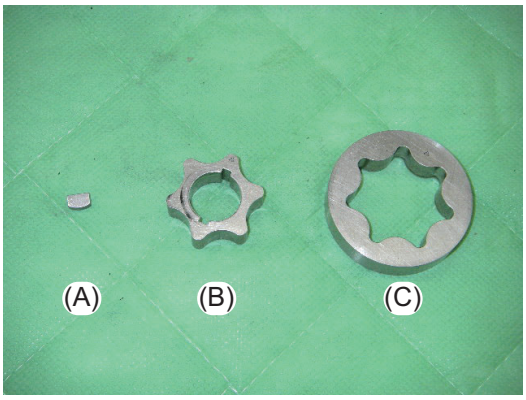

NOTE:

●The parts (B) and (C) are supplied in an assembly.

2. Fit the Key (A) into the Pump Shaft keyway.

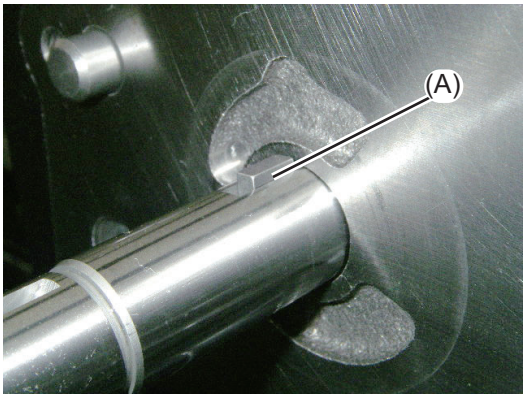

NOTE:

●Put in the Key (A) so that its top face is horizontal to the Pump Shaft.

3. Apply transmission oil to the Inner Rotor (B) and insert the Inner Rotor (B).

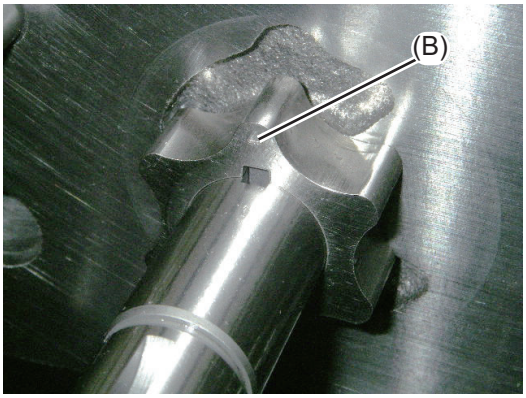

STOP **IMPORTANT**

●When the Key (A) gets out of the keyway and the Inner Rotor (B) cannot be pushed in all the way, horizontally re-position the Key (A) and then push it in.

4. Assemble the Pump Body. Apply transmission oil to the six (6) O-Rings and install them into each appropriate groove.

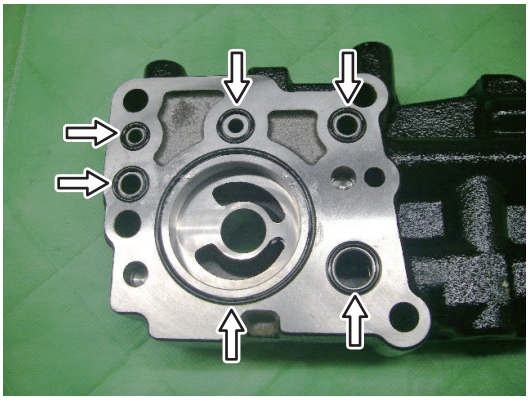

5. Tighten the two (2) Plugs on the right side.

Plug tightening torque for PT1/8
8.7 - 9.4 ft·lbs (11.8 -12.8 N·m)

Plug tightening torque for PT3/8
19.5 - 23.8 ft·lbs (26.5 - 32.3 N·m)

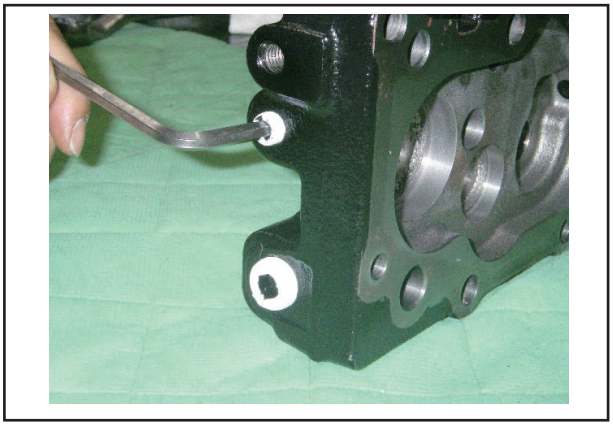

STOP **IMPORTANT**

- Apply Teflon Tape to the threads of the Plug.

6. Tighten the one Plug on the left side.

Plug tightening torque for PT3/8
19.5 - 23.8 ft·lbs (26.5 - 32.3 N·m)

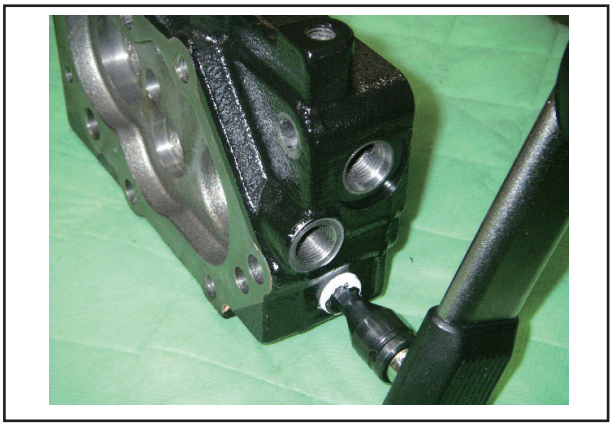

STOP **IMPORTANT**

- Apply Teflon Tape to the threads of the Plug.

7. Tighten the one Plug on the bottom side.

Plug tightening torque for PT1/8
8.7 - 9.4 ft·lbs (11.8 -12.8 N·m)

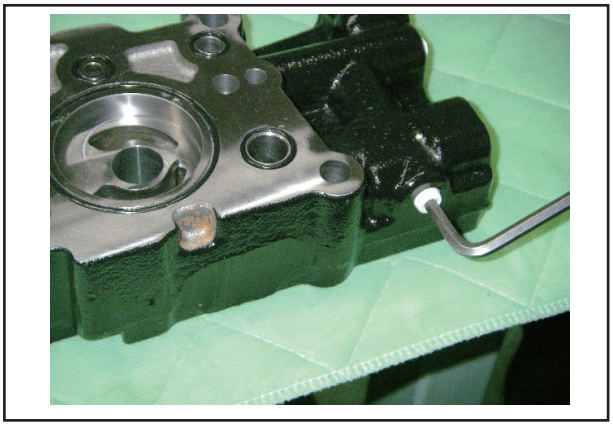

STOP **IMPORTANT**

- Apply Teflon Tape to the threads of the Plug.

8. Install the Reduction Valve on the left side. To do so, apply transmission oil to the Valve, Spring and Plug, and then insert them in that order.

Reduction Valve tightening torque
19.5 - 23.8 ft·lbs (26.5 - 32.3 N·m)

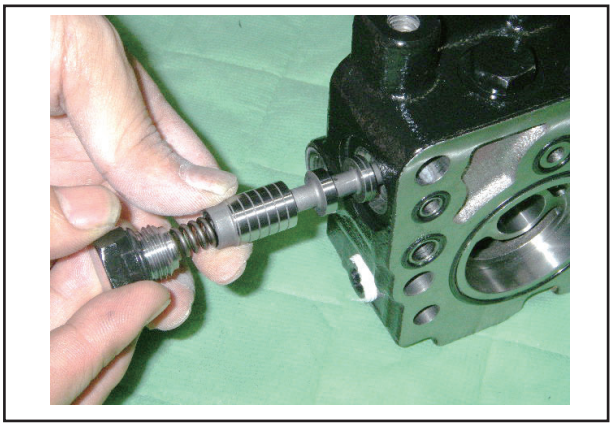

9. Install the Pressure Valve on the top. To do so, apply transmission oil to the Valve, Spring and Plug, and then insert them in that order.

Pressure Valve tightening torque
16.2 - 19.9 ft·lbs (22.0 - 27.0 N·m)



10. Insert the Plug into the top.

Plug tightening torque
16.2 - 19.9 ft·lbs (22.0 - 27.0 N·m)



11. Apply transmission oil to the Outer Rotor (C) and insert the Outer Rotor (C). Then insert the two (2) Locating Pins into the section (a).

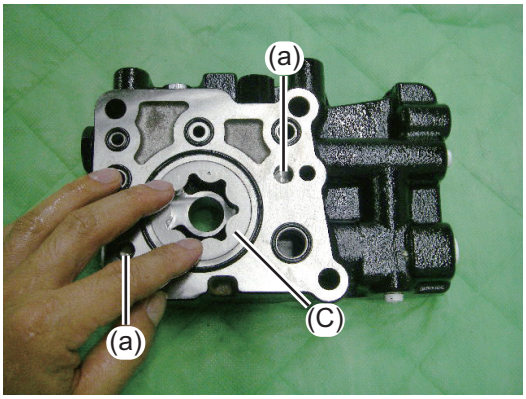

12. Install the Pump body to the Transmission.

	Name
(a)	Pump Shaft

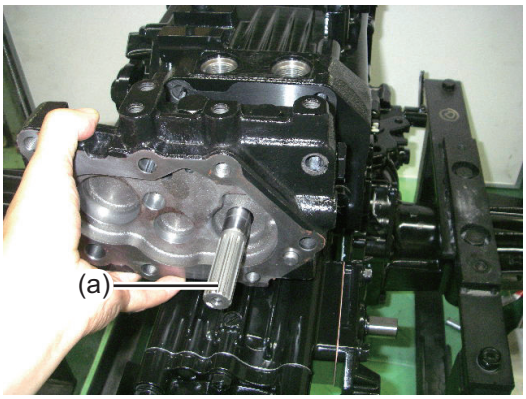

13. Insert the Inner Rotor (a) and the Outer Rotor (b) (Trochoid Pump) while aligning them.

NOTE:

●Turning the Pump Shaft turns the Inner Rotor (a).

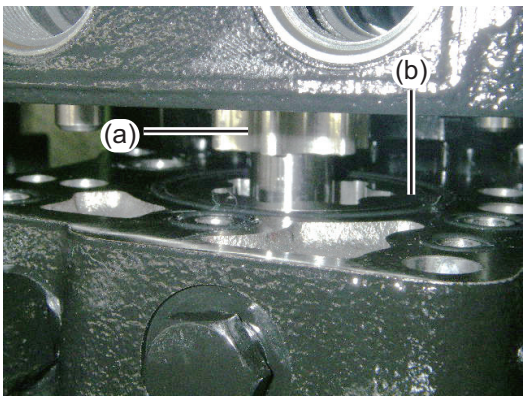

14. Tighten the M10 x 105 mm (L: 4.1 in.) Bolt (a), M8 x 50 mm (L: 2.0 in.) Hexagon Socket Cap Bolt (b) and Washer.

Bolt (a) tightening torque
32.5 - 43.4 ft·lbs (44.1 - 58.8 N·m)

Hexagon Socket Cap Bolt (b) tightening torque
16.2 - 19.9 ft·lbs (22.0 - 27.0 N·m)

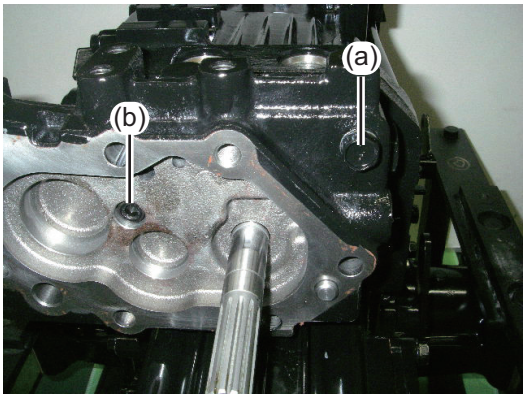

15. Install the External Snap Ring 17 on the Pump Shaft (a).

NOTE:

●A clearance of about 1 mm will be formed.

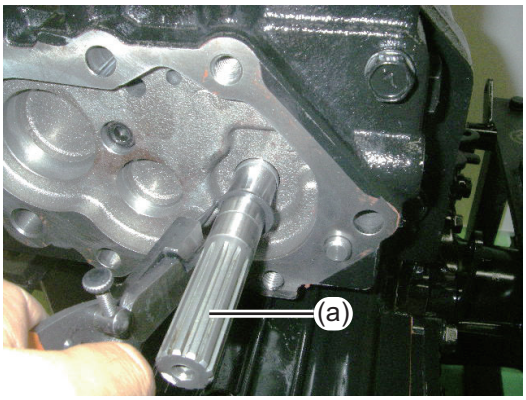

16. Press-fit the Bearings into the Gears (A) and (B) of the Triple Gear, respectively.

	Name		Name
(A)	Pump Gear 3	(B)	Pump Gear 2
(C)	Pump Gear 1	(D)	Two Bearings, #6004
(E)	Two Bearings, #6001		

NOTE:

●The Bearings inserted on both sides of each Gear are the same.

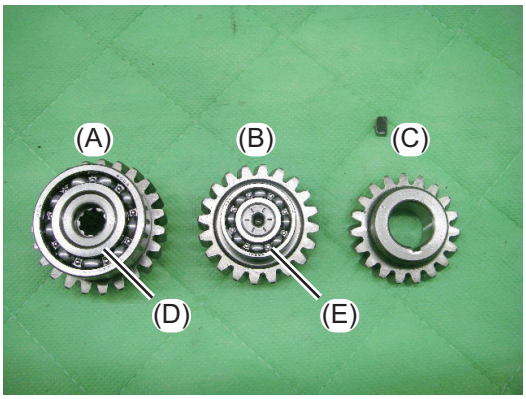

17. Fit the 13 x 3.2 Woodruff key (A) into the Pump Shaft and horizontally position the top face of the Woodruff key (A). Apply transmission oil to the Pump Gear 1 (C) and insert the Pump Gear 1 (C).

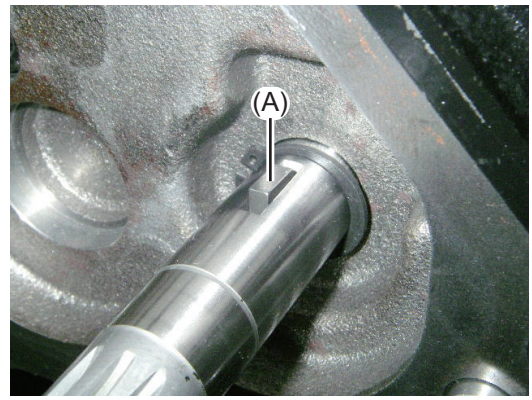

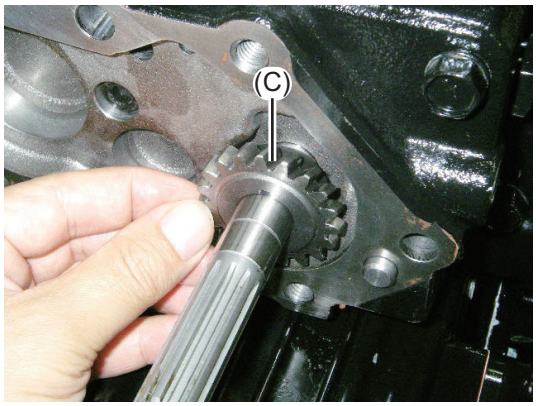

18. Fit in the three (3) Gears and then slide the Bearing #6303 (a) onto the Pump Shaft. Insert the two Locking Pins.

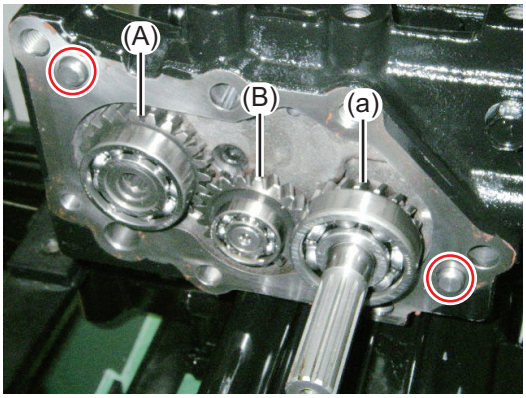

IMPORTANT

- All parts can be easily inserted. Therefore, do not force them.

19. Place the Gasket (a) to the mating surface and install the Input Gear Box (b).

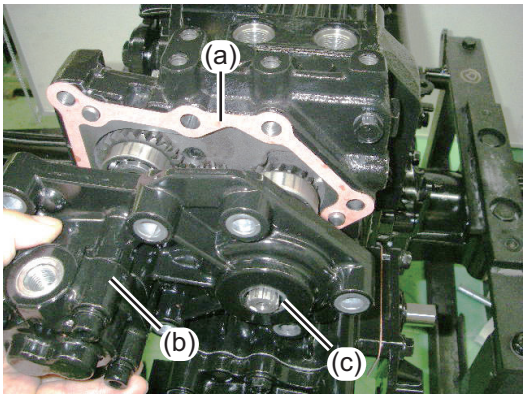

IMPORTANT

- Apply grease to the Oil Seal portion (c) into which the Pump Shaft is inserted, in advance.
- Never disassemble the Input Gear Box Gear Pump. Disassembling it does not guarantee its performance.

20. Once the mating surfaces contact each other, tighten the seven (7) Bolts.

M10 Bolt tightening torque
23.5 - 27.1 ft·lbs (31.8 - 36.8 N·m)

M8 Bolt tightening torque
16.2 - 19.9 ft·lbs (22.0 - 27.0 N·m)



(5) Installing the valves

1. Assemble the Tow Relief Valve (Forward Valve) (A) and the Check Valve (Reverse Valve) (B). Apply transmission oil to both the valves.

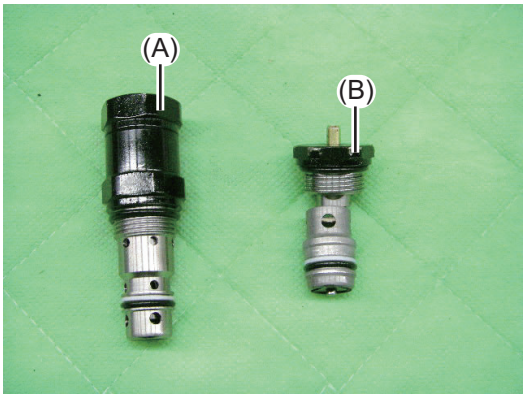

NOTE:

- The Taller of the valves is the Tow Relief Valve and the shorter is the Reverse Valve.

2. Install the Check Valve (Reverse Valve) (B) on the right side, viewed from the Pump Shaft end of the Center Plate.

Check Valve tightening torque
22.8 - 27.8 ft·lbs (30.9 - 37.7 N·m)



NOTE:

- Tighten the Check Valve (Reverse Valve) while slightly holding down it.

3. Install the Tow Relief Valve (Forward Valve) (A) on the left side, viewed from the Pump Shaft end of the Center Plate.

Tow Relief Valve tightening torque
22.8 - 27.8 ft·lbs (30.9 - 37.7 N·m)



NOTE:

- Tighten the Tow Relief Valve (Forward Valve) (A) while slightly holding down it.

(6) Installing the Neutral Return Spring to the control arm

1.

	Name		Name
(A)	Neutral Return Spring	(B)	M8 mm (L: 0.3 in.) Washer
(C)	Snap Pin		

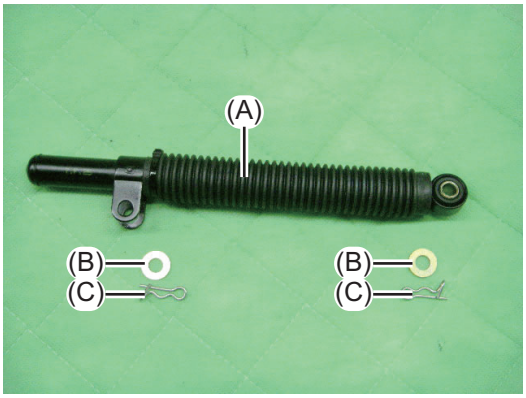

2. Fit the Control Arm Pin into the stud beside the Brake Cover and secure with the M8 mm (L: 0.3 in.) Washer (B) and Snap Pin (C).

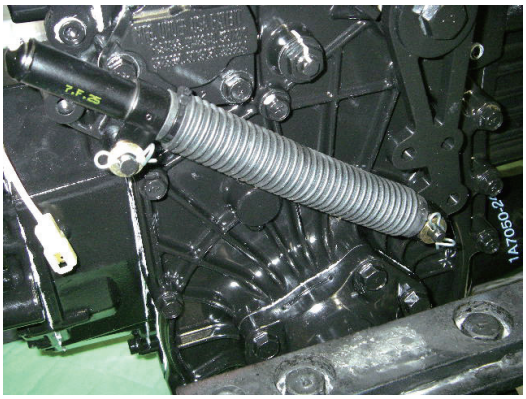

(7) Installing the sub-shift lever on the left side of the motor case

1.

	Name		Name
(A)	Sub-Shift Lever	(B)	M10 x 20 mm (L: 0.8 in.) Set Screw
(C)	M10 mm (L: 0.39 in.) Nut		

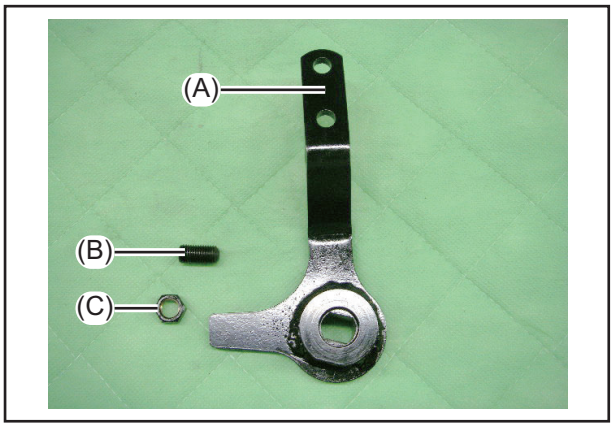

2. Tighten the M10 x 20 mm (L: 0.8 in.) Set Screw (B) and then tighten with the M10 mm (L: 0.39 in.) Nut (C) to avoid loosening.

Set Screw (B) tightening torque
21.7 - 25.4 ft·lbs (29.4 - 34.4 N·m)

Nut (C) tightening torque
18.1 - 21.8 ft·lbs (24.5 - 29.5 N·m)

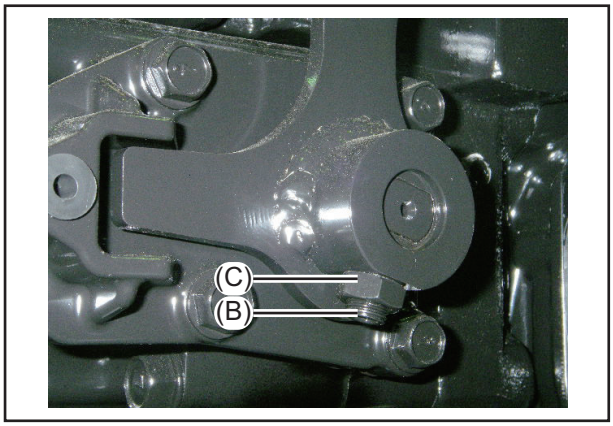

6-3 Disassembling and Assembling (Front Axle)

1. Engage the parking brake securely.

<Engaging the Parking Brake>
(1) Fully depress the brake pedal (Fig. 1, (A)).
(2) Fully pull the parking brake lever (Fig. 1, (B)) backward to engage the parking brake securely.
(3) Remove foot and make sure that the brake is fully locked.

NOTE:

- Applying the parking brake also engages the differential lock at the same time.

(A) Brake pedal
(B) Parking brake lever

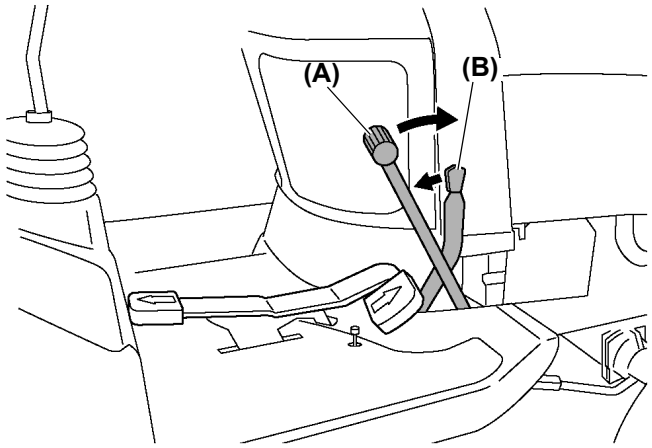

Fig.1

2. Chock the rear wheels.

(A) Wheel chock

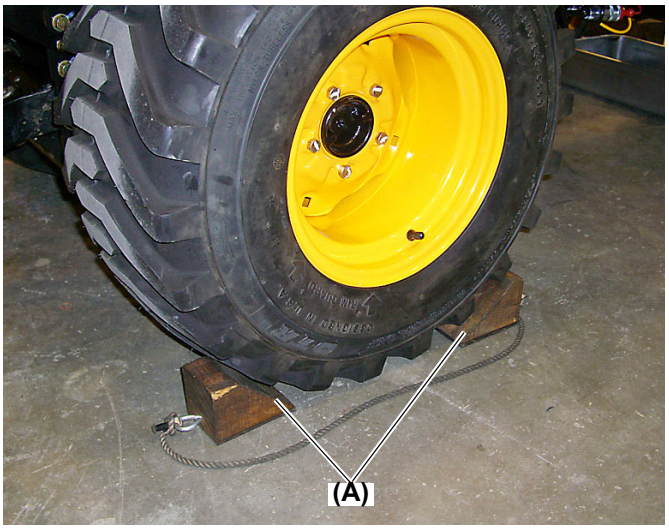

Fig.2

3. When separating the transmission, be sure to lock the front axle with a wedge (Fig. 3, (A)) to prevent the machine from tilting side to side.

(A) Wedge

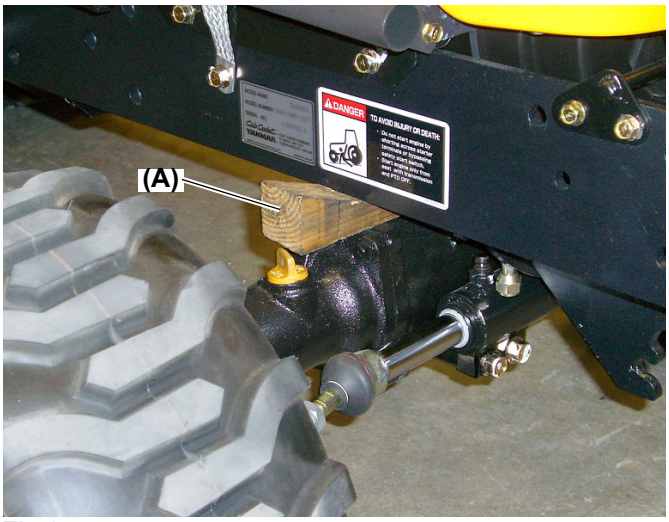

Fig.3

4. Lift up the tractor at the front frame using a crane.



Fig.4

5. Set the tractor on the stands.



Fig.5

6. Remove the front wheels.

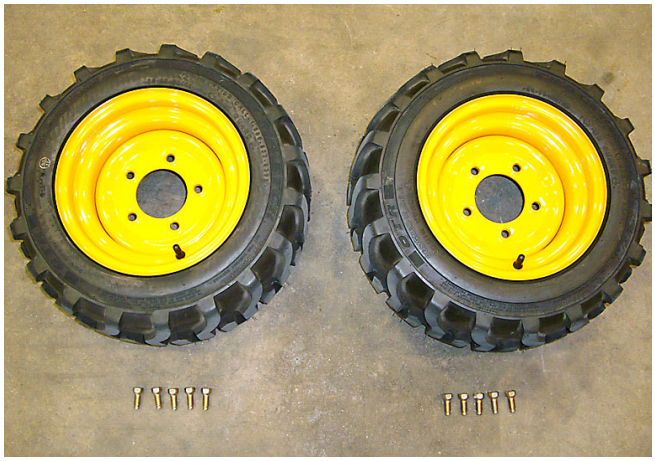

Fig.6

7. Remove the tie rod (Fig. 7, (A)).

(A) Tie rod

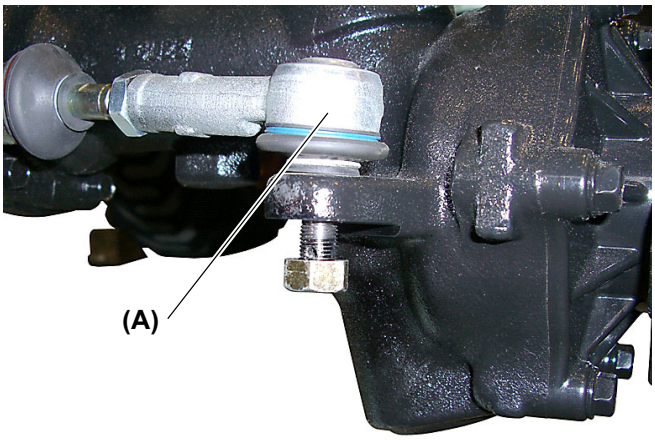

Fig.7

8. Remove the power steering cylinder.

NOTE:

- Mark the Power Steering Hoses to the corresponding fittings from which they were removed.

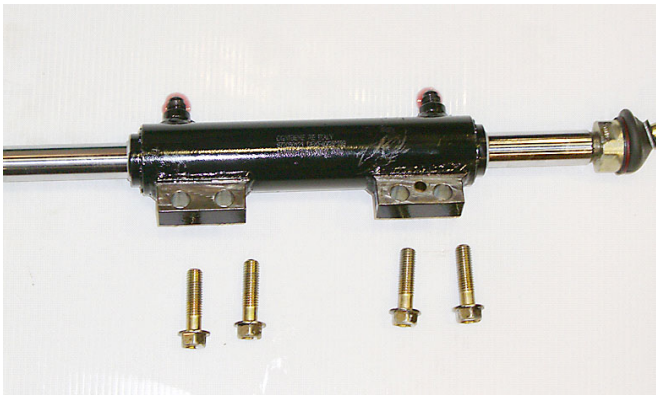

Fig.8

9. Loosen the clamp (Fig. 9, (A)).
10. Remove the shaft cover (Fig. 9, (B)).

(A) Clamp
(B) Shaft cover

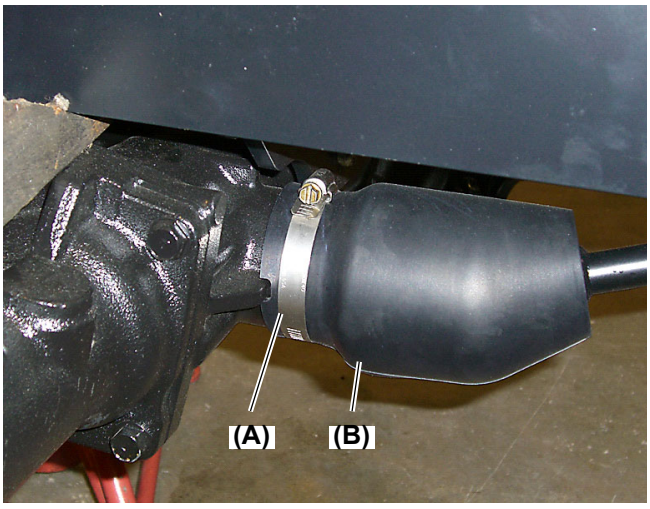

Fig.9

11.Remove the stop ring.
12. Drive out the spring pins (Fig. 10, (A)).

NOTE:

- If two (2) spring pins were pulled out at the same time, replace to new parts.
  Reinstall the pins in the proper direction.
- When reinstalling the cover, prevent it from touching the propeller shaft.

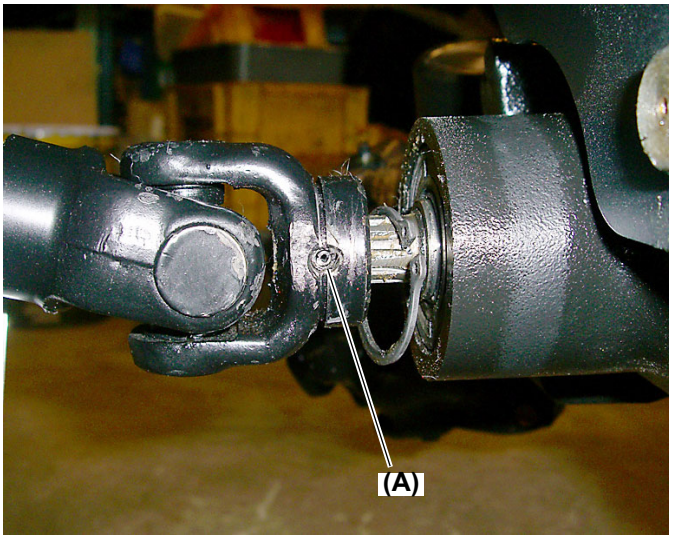

Fig.10

13.Remove the propeller shaft (Fig. 11, (A)).

(A) Propeller shaft

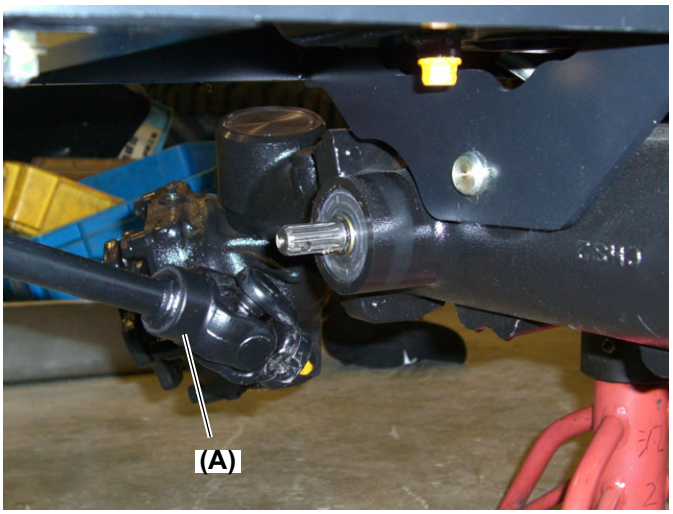

Fig.11

14.Remove the two (2) nuts (Fig. 12, (A)) and two washers. Pull out the center pin (Fig. 12, (B)).

NOTE:

- When pulling out the center pin (Fig. 12, (B)), support the front axle with the jack or by lifting with a crane.

(A) Nuts
(B) Center pin

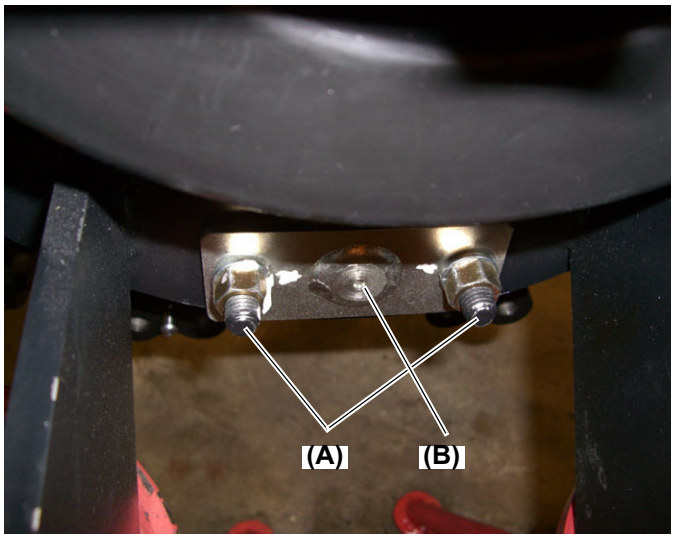

Fig.12

15. Remove the four (4) M10 x 30 (L: 1.2 in.) bolts (Fig. 13, (A)) per side from the front gear cases, left & right. Remove the front Gear Cases.

16. When reinstalling the front gear case, torque the four (4) M10 x 30 (L: 1.2 in.) bolts per side from the front gear case, left & right to 32.4 to 43.5 ft·lbs (44 to 59 N·m).

(A) M10 x 30 (L: 1.2 in.) bolts

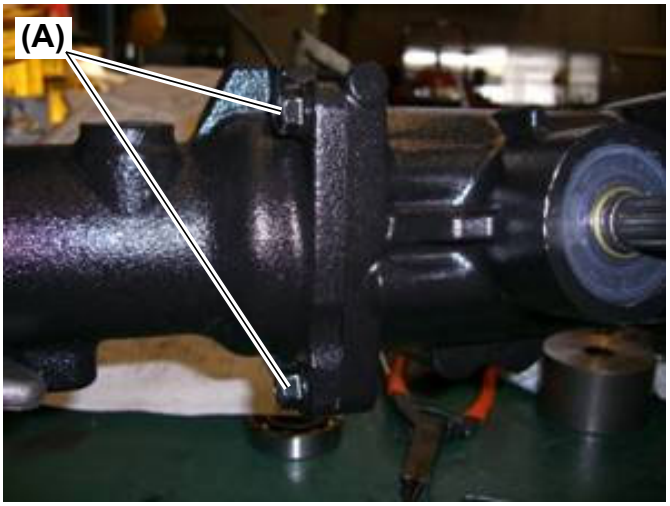

Fig.13

17. Remove the differential gear assembly from the front axle housing (Fig. 14, (A)).

(A) Front axle housing

NOTE:

- When re-installing the Front Shaft, apply 737-0168A Alvania EPR-00 Grease.

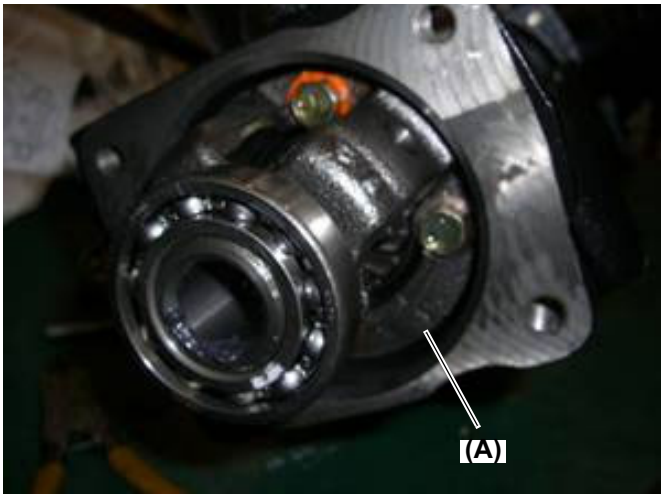

Fig.14

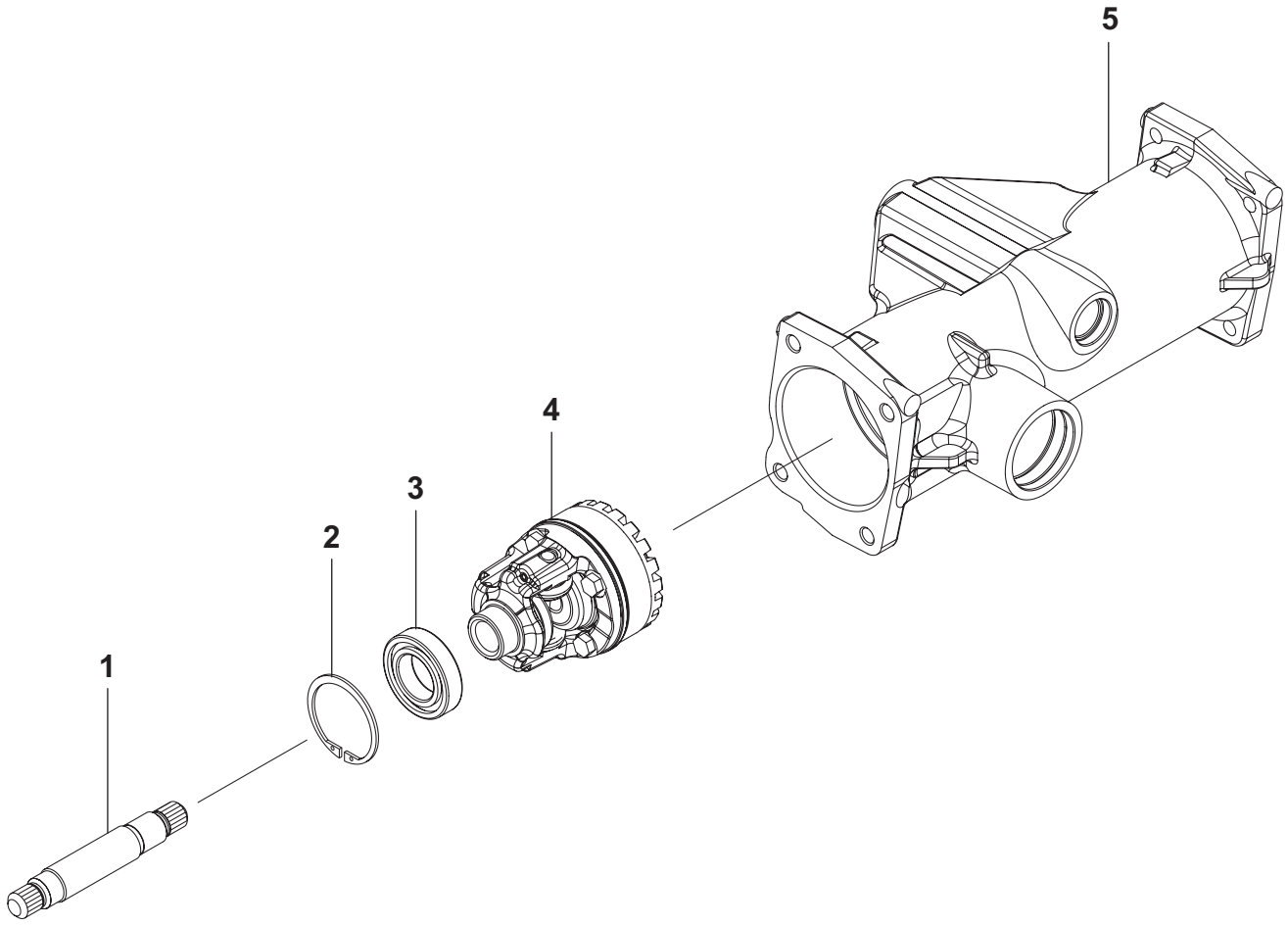

Fig.15

REF.	Description	Parts No.
1	Shaft L, Front 1	CY-1A7880-13510
2	Ring, 55	CY-22252-000550
3	Bearing, 6006 NTN	CY-24101-060064
4	Gear, Differential Assembly	CY-1A7880-13150
5	Housing, Front Axle	CY-1A7880-13600

NOTE:

●When re-installing the front shaft (Fig. 15, (Ref. #1)), apply 737-0168A Alvania EPR-00 Grease.

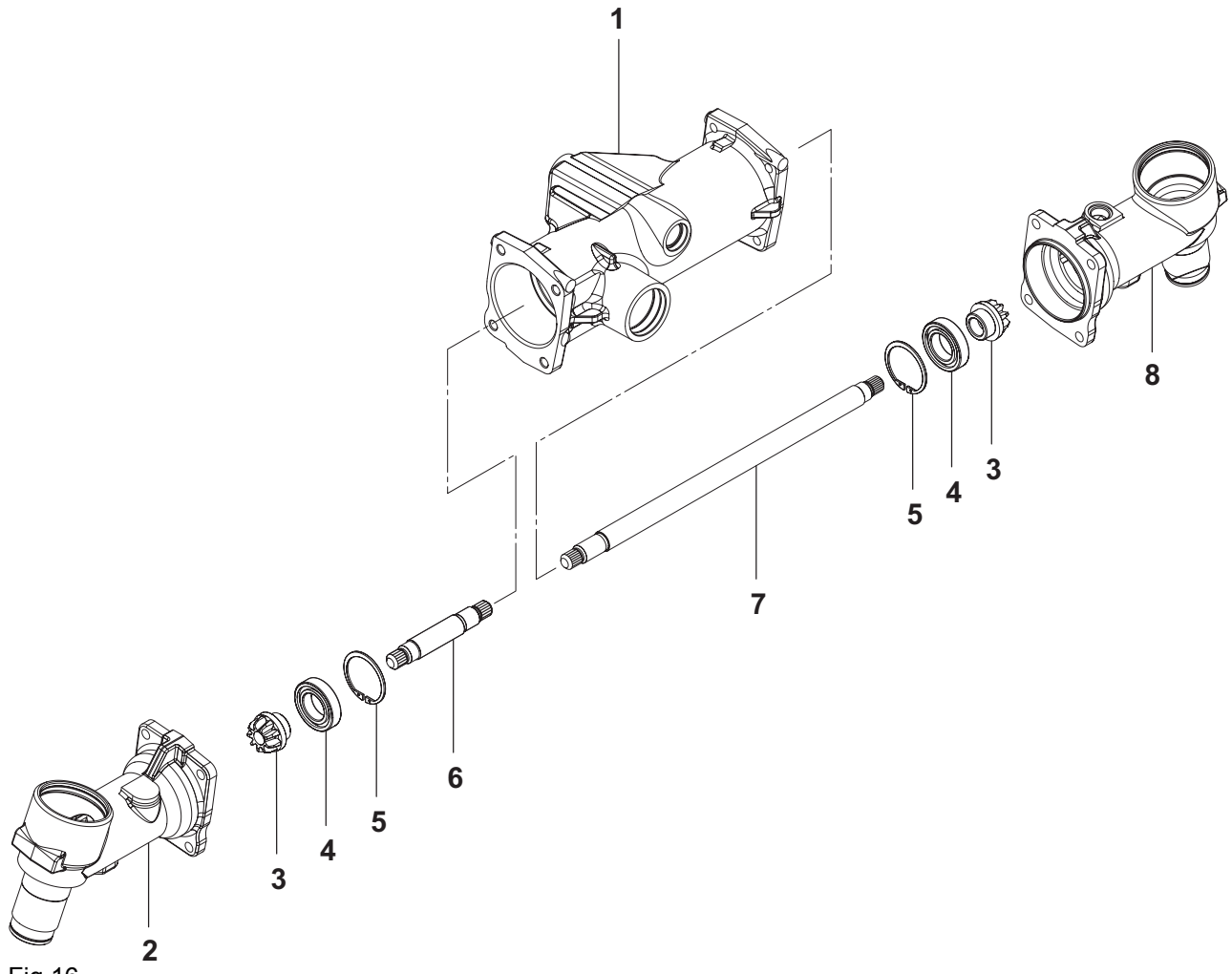

Fig.16

REF.	Description	Parts No.
1	Housing, Front Axle	CY-1A7880-13600
2	Case L, Front Gear	CY-1A7880-13710
3	Gear 9t, Bevel	CY-1A7880-13530
4	Bearing, 6006 NTN	CY-24101-060064
5	Ring, 55	CY-22252-000550
6	Shaft L, Front 1	CY-1A7880-13510
7	Shaft R, Front 1	CY-1A7880-13520
8	Case R, Front Gear	CY-1A7880-13720

18. Remove the input shaft (Fig. 17, (A)) from the front axle housing (Fig. 18, (B)). The input shaft is held in the front axle housing by an internal snap ring.
    The two (2) bearings and collar are secured to the input shaft by an external snap ring.
    The oil seal is a tolerance fit to the front axle housing. The oil seal uses a sleeve for the seal surface.

(A) Input shaft
(B) Front axle housing



Fig.17



Fig.18

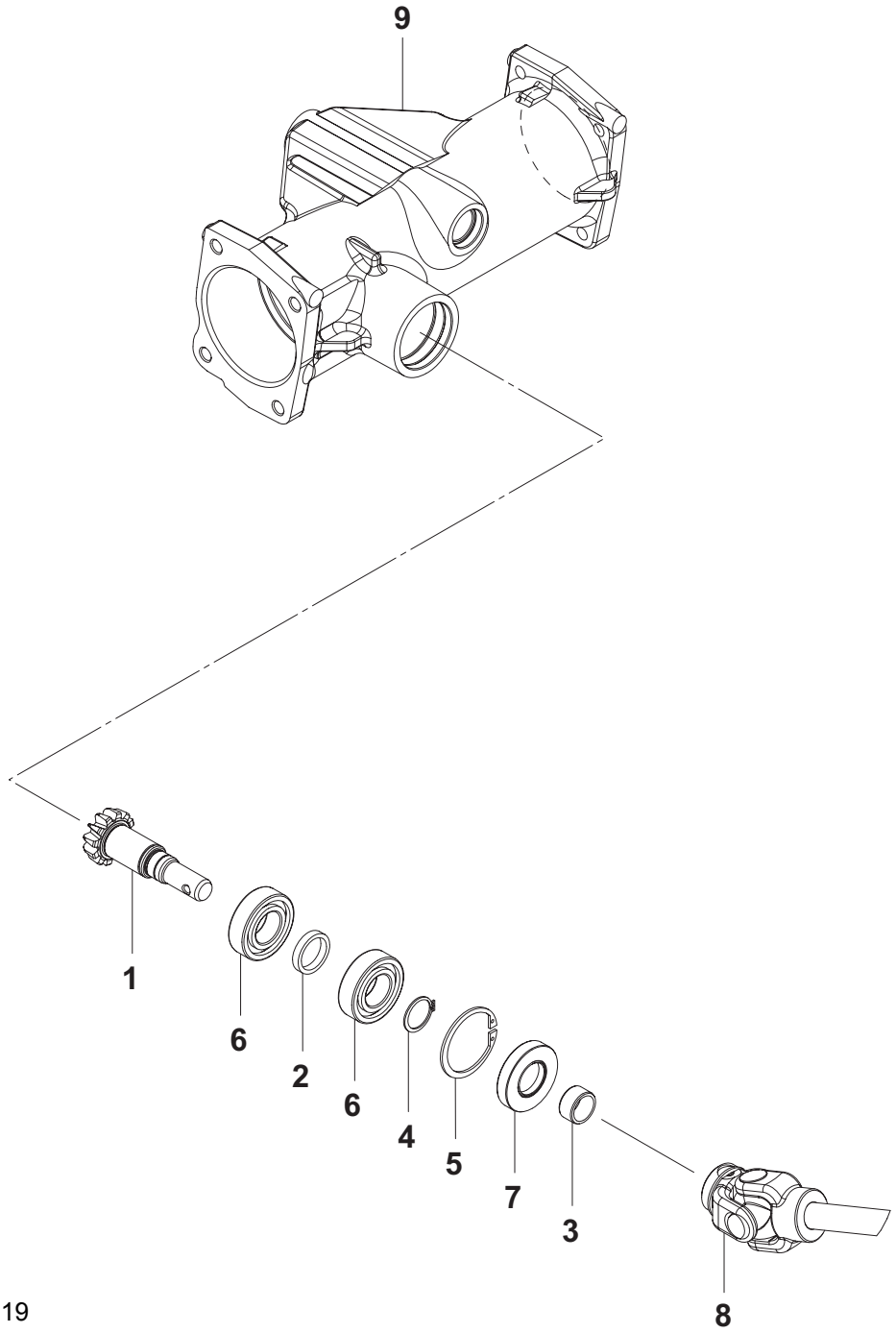

Fig.19

REF.	Description	Parts No.
1	Shaft, Input	CY-1A7130-13120
2	Collar 30 x 25 x 5.7	CY-1A7130-13130
3	Sleeve, 202513	CY-1E4760-73240
4	Ring, 24	CY-22242-000240
5	Ring, 52	CY-22252-000520

REF.	Description	Parts No.
6	Bearing, 6205 NTN	CY-24101-062054
7	Seal, TC255210	CY-24421-255210
8	Shaft Pop. F	CY-1A7880-13310
9	Housing, Front Axle	CY-1A7880-13600

NOTE:

●When reinstalling, (Fig. 19, (Ref. #5, 7)), and (Fig. 19, (Ref. #3)) should be installed to the front axle housing.

19. Remove the six (6) M10 x 30 (L: 1.2 in.) bolts (Fig. 20, (A)) that secure the front bearing case (Fig. 20, (B)) to the front gear box (Fig. 20, (C)). Remove the external snap ring from the front spindle.
    Torque the six (6) M10 x 30 (L: 1.2 in.) bolts to 32.4 to 43.5 ft·lbs (44 to 59 N·m).

    (A) M10 x 30 (L: 1.2 in.) bolts
    (B) Front bearing case
    (C) Front gear box

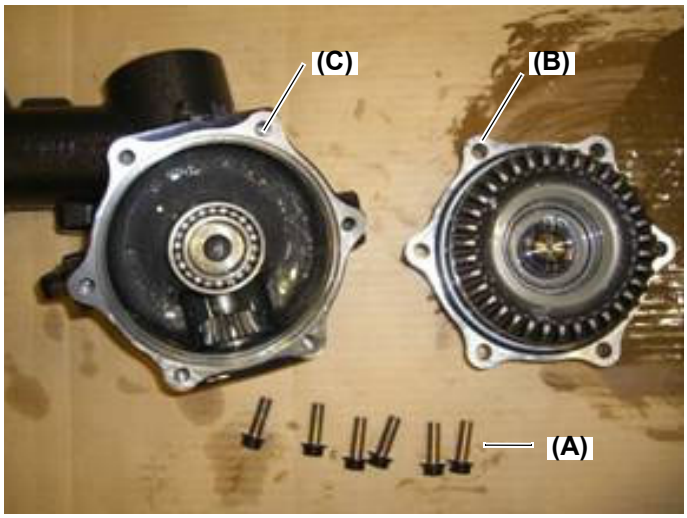

Fig.20

20. The front bearing case (Fig. 21, (A)) is sealed to the front gear box with an O-ring (Fig. 21, (B)). Remove the front spindle (Fig. 21, (C)) and seal (Fig. 21, (D)).

    (A) Font bearing case
    (B) O-ring
    (C) Front spindle
    (D) Seal

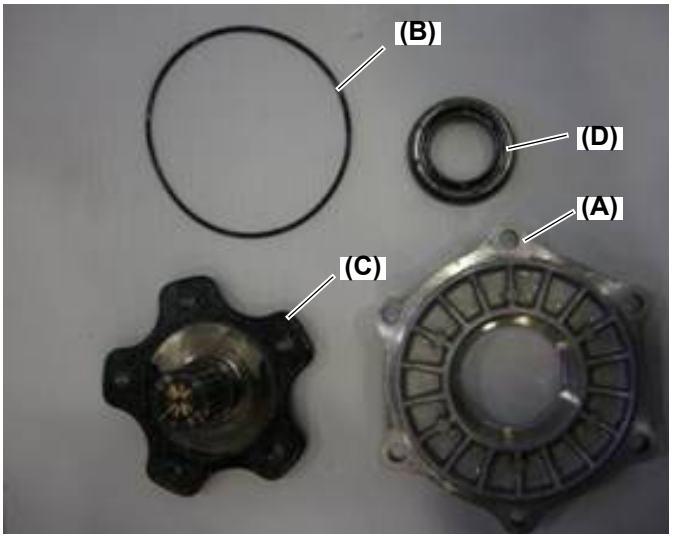

Fig.21

21. Remove the final gear (Fig. 22, (A)) from the front bearing case (Fig. 22, (B)).

    (A) Final gear
    (B) Front bearing case

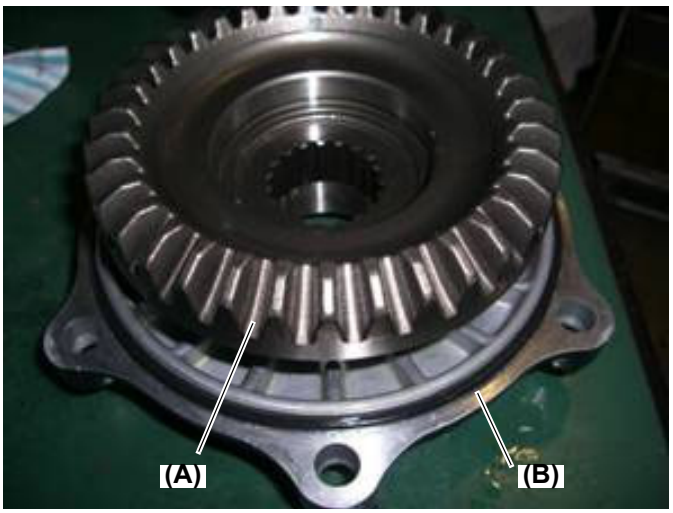

Fig.22

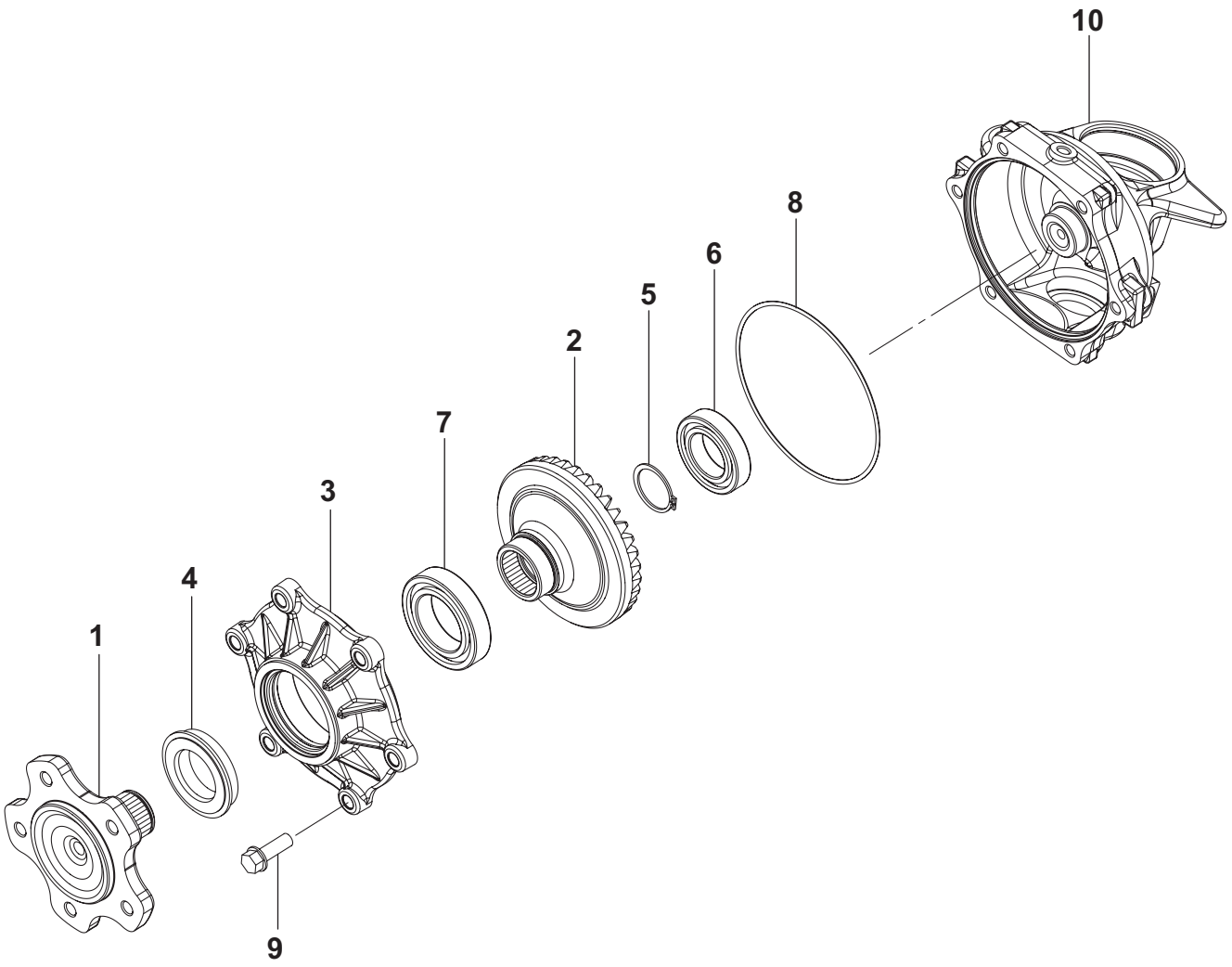

Fig.23

REF.	Description	Parts No.
1	Spindle ,Front	CY-1A7880-14110
2	Gear F, Final	CY-1A7880-14120
3	Case, Front Bearing	CY-1A7880-14130
4	Seal, QLFY 40 x 62 x 14	CY-1E8420-55430
5	Ring, 34	CY-22242-000340
6	Bearing, 6007 NTN	CY-24101-060074
7	Bearing, 6009 NTN	CY-24101-060094
8	Packing, G 130.0	CY-24321-001300
9	Bolt, 10 X 30 (L: 1.2 in.)	CY-26106-100302
10	Box L, Front Gear	CY-1A7880-13730

22. When removing the bearing (Fig. 24, (A)) from the final gear (Fig. 24, (B)), use a bearing separator and hydraulic press.



Fig.24

If a hydraulic press is not available use a 1.2 in. (30 mm) socket and bearing puller, (Fig. 25, (C)).

(A) Bearing
(B) Final gear
(C) Bearing puller



Fig.25

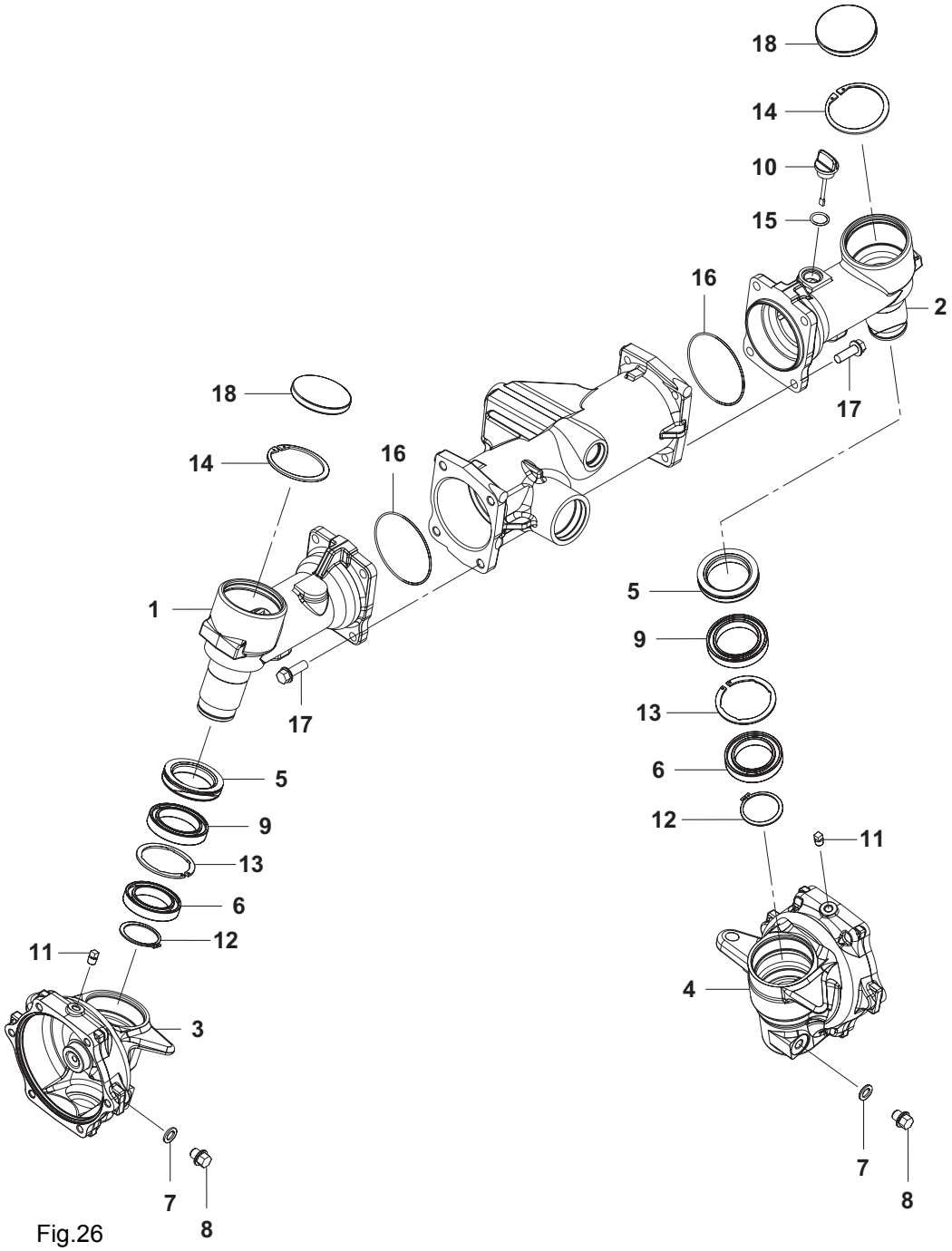

Fig.26

REF.	Description	Parts No.
1	Case L, Front Gear	CY-1A7880-13710
2	Case R, Front Gear	CY-1A7880-13720
3	Box L, Front Gear	CY-1A7880-13730
4	Box R, Front Gear	CY-1A7880-13740
5	Seal QLN50721013	CY-1A7880-13780
6	Bearing, 6909	CY-194951-14440
7	Gasket, 20 x 12 x 2	CY-198165-24440
8	Bolt, M12 x 12 (L: 0.48 in.)	CY-198165-24490
9	Bearing, 6910	CY-194105-26430

REF.	Description	Parts No.
10	Gauge, Oil Level	CY-1C6050-31250
11	Plug, PF 02	CY-194151-36670
12	Ring, 45	CY-22242-000450
13	Ring, 68	CY-22252-000681
14	Ring, 72	CY-22252-000720
15	Packing, P 18.0	CY-24311-000180
16	Packing, S 90.0	CY-24341-000900
17	Bolt, 10 X 30 (1.2 in.)	CY-26106-100302
18	Cap, Sealing 72	CY-27260-720000

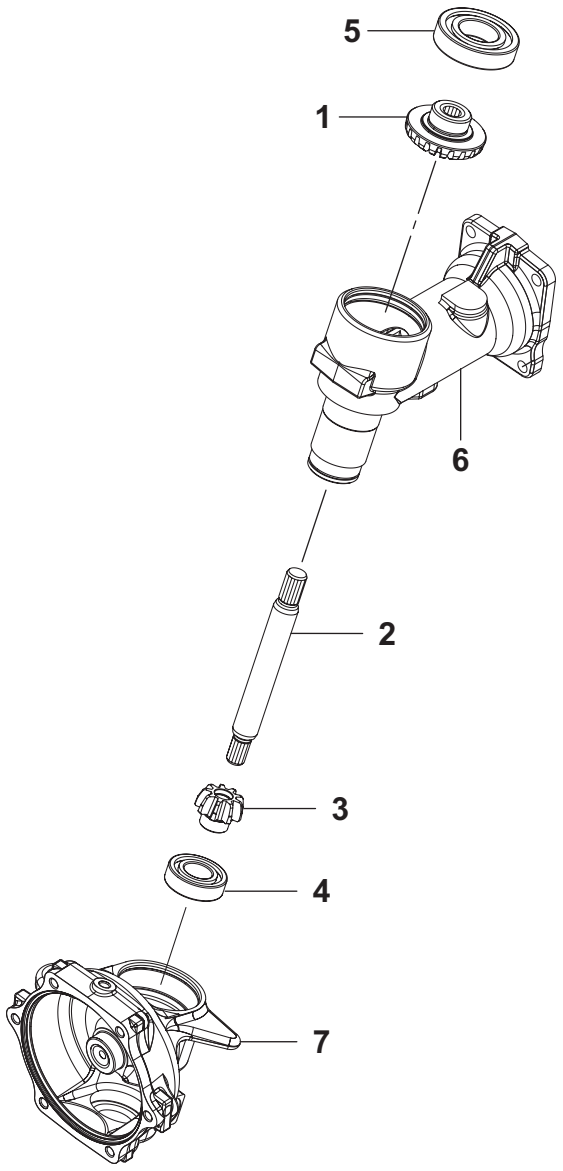

Fig.27

REF.	Description	Parts No.
1	Gear 20T, Bevel	CY-1A7880-13540
2	Shaft, Front 2	CY-1A7880-13810
3	Pinion F, Final	CY-1A7880-13820
4	Bearing, 6205 NTN	CY-24101-062054
5	Bearing, 6207	CY-24101-062074
6	Case L, Front Gear	CY-1A7880-13710
7	Box L, Front Gear	CY-1A7880-13730

23. Remove the external snap ring that holds the lower bearing of the front gear case to the front gear box.



Fig.28

24. Remove the front gear case from the front gear box.

NOTE:

- CY-1A7880-13780 SEAL QLN 50721013 consists of two parts.
- The upper seal in the front gear box is a two (2) piece style seal, that uses a separate seal sleeve.



Fig.29

25. Reassembling of the front axle assembly is the reverse order of disassembly of the front axle.

6. HYDRAULICS

1. Table of Contents

2. Schematics 6-3
2-1 Hydraulic Circuit 6-3
3. Component Location 6-4
3-1 Hydraulic System 6-4
3-2 Hydraulic Control Levers and Linkage 6-5
3-3 Hydraulic System 6-6
4. Theory of Operation 6-7
4-1 Function - Power Steering 6-7
4-2 System Structure 6-7
4-3 Lift Control Valve 6-8
4-4 Tightening torque 6-13
4-5 3-Point Hitch Control / Cutting Height Adjustment Lever 6-14
5. Diagnostics 6-17
5-1 Implement Control Valve 6-17
5-2 Lift Cylinder System 6-20
5-3 Lift Control Valve 6-22
6. Tests and Adjustments 6-23
6-1 Lift Lever Adjustment 6-23
6-2 Warming Up the Hydraulic Oil 6-25
6-3 Testing the Charge Pump Pressure and Flow 6-26
6-4 Testing for Leaks in the Lift Cylinder 6-30
7. Annex 6-33
7-1 Lift Control Valve 6-33

2. Schematics

2-1 Hydraulic Circuit

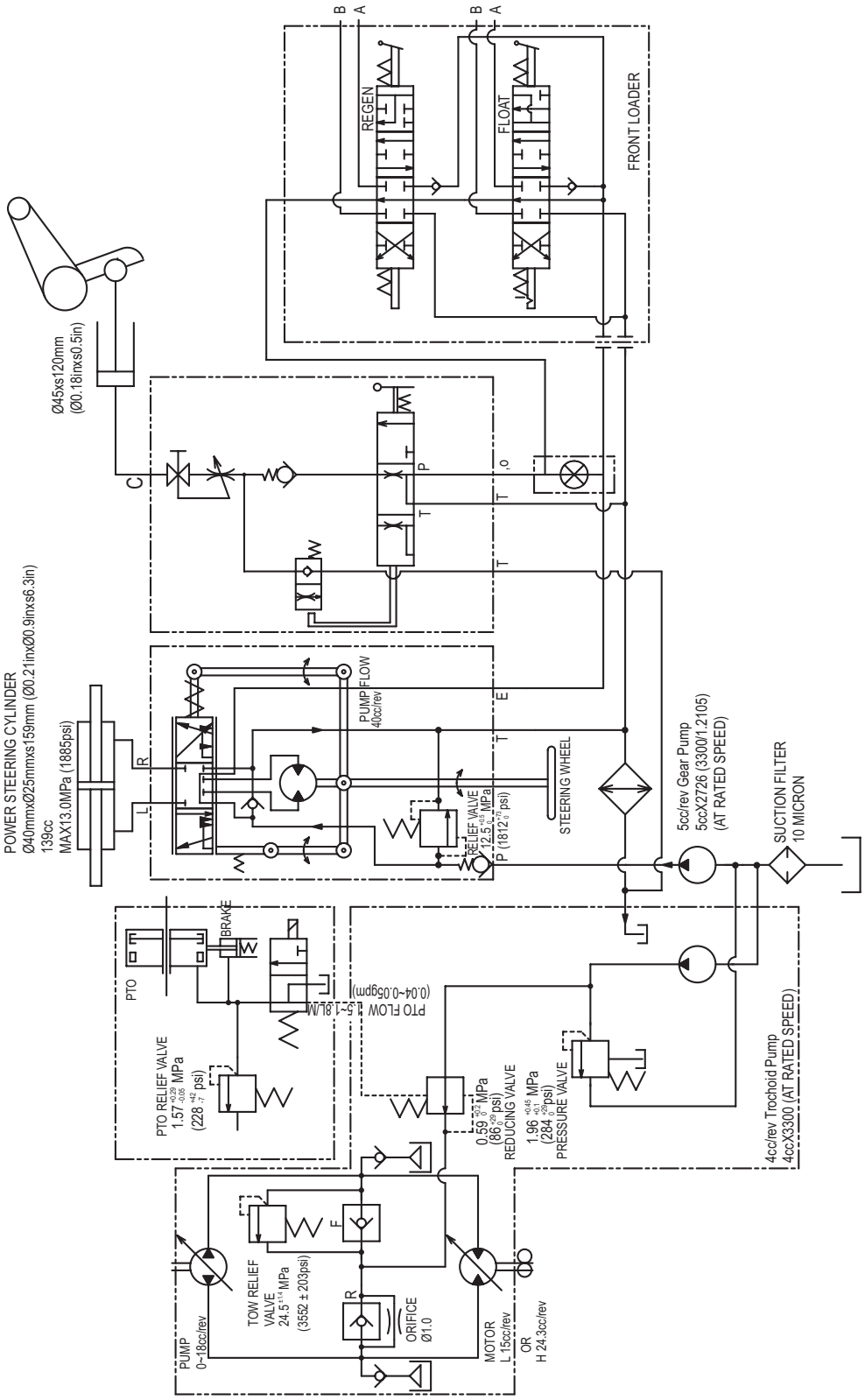

3. Component Location

3-1 Hydraulic System

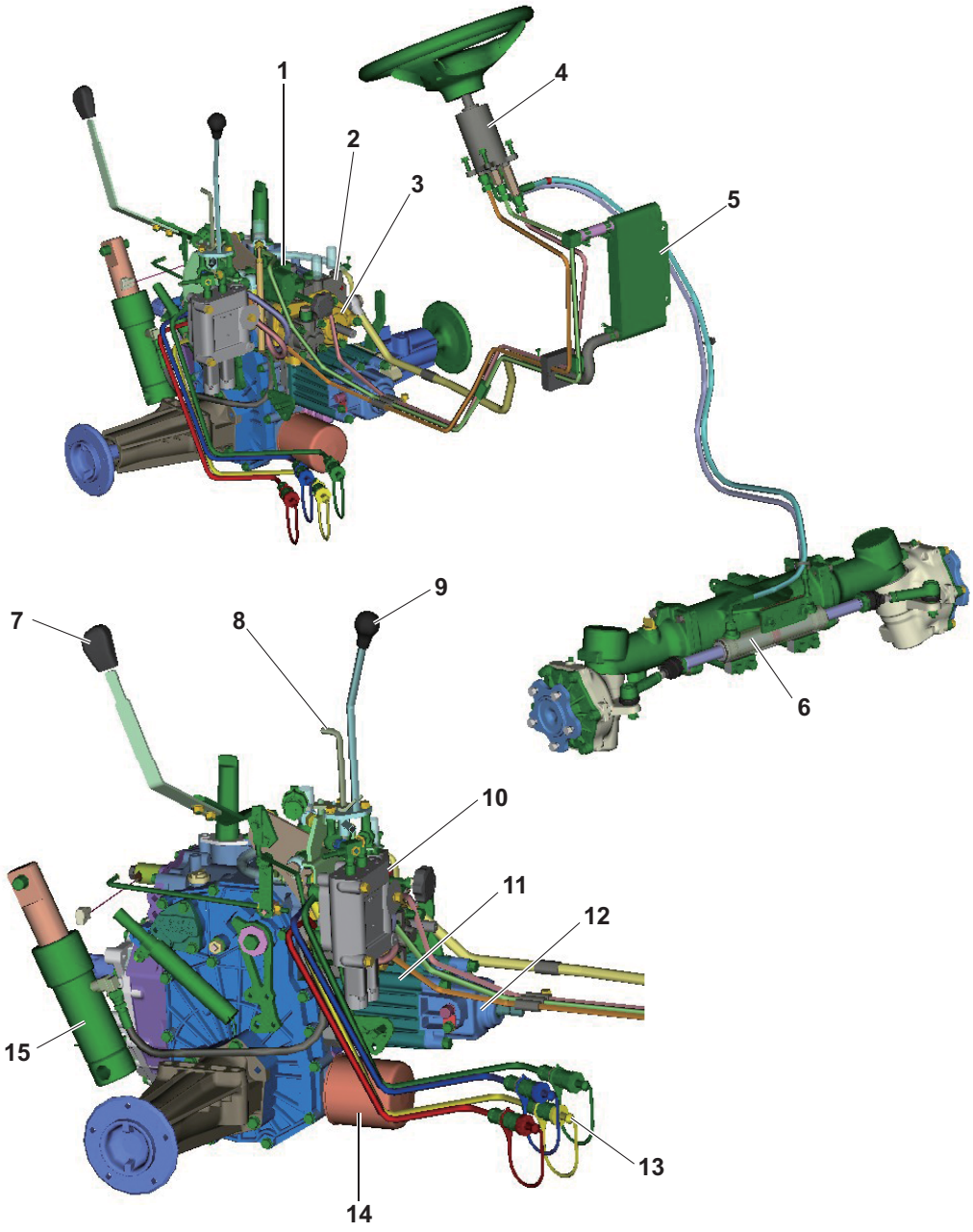

1. Valve ASSY., Lift
2. Pump Body K93
3. Center Case K93
4. Valve ASSY., Steering
5. Cooler, Oil
6. Cylinder ASSY., PST
7. 3-Point Hitch Control / Cutting Height Adjustment Lever
8. Implement Lock Lever
9. Implement Control Lever
10. Valve, Loader
11. Motor Case K93
12. Cover, Front
13. Filter, Oil
14. Coupler, HYD.Quick
15. Cylinder ASSY., HYD.

3-2 Hydraulic Control Levers and Linkage

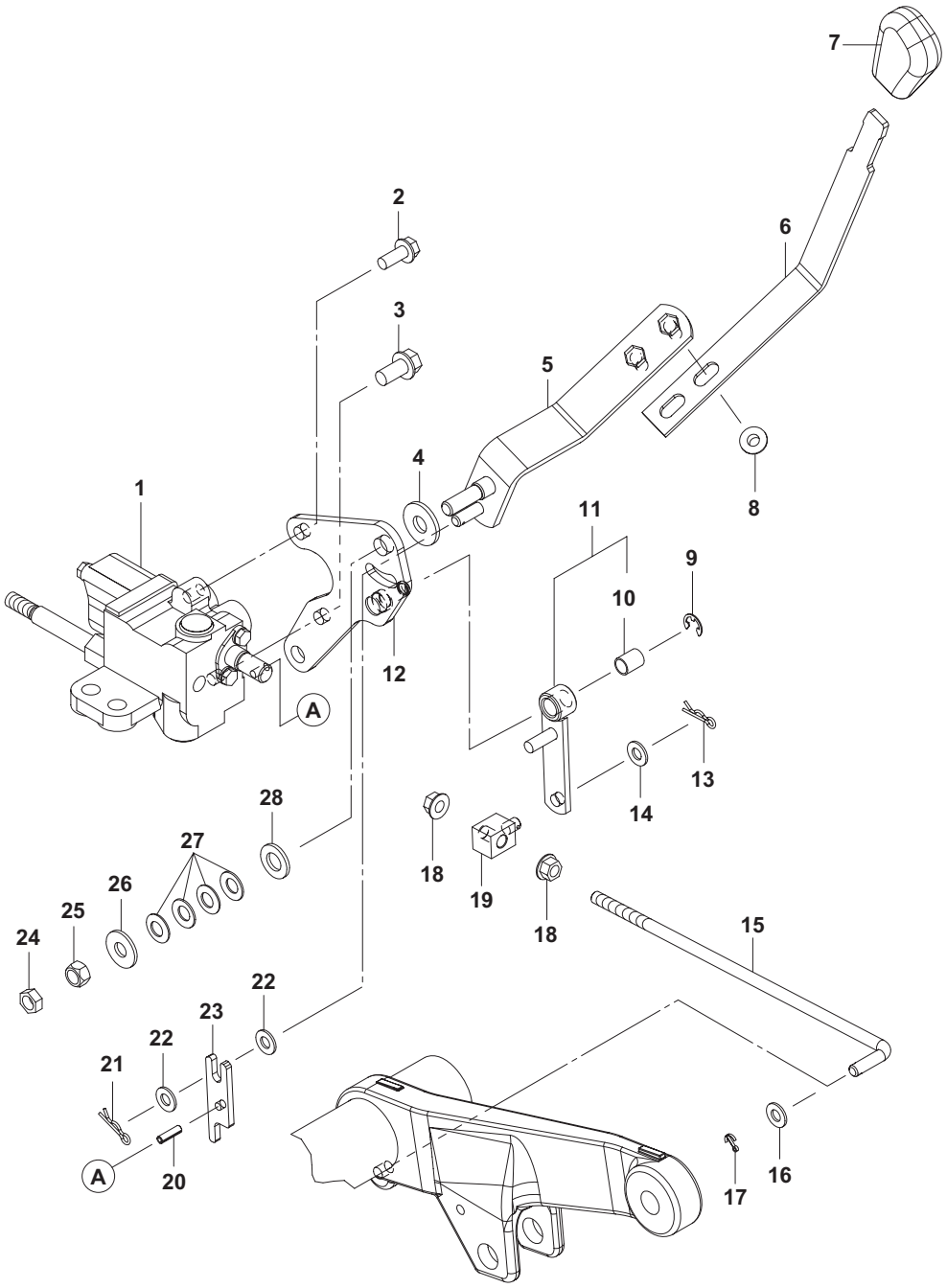

1. Valve ASSY., Lift
2. Bolt, 8 x 20 (L: 0.8 in.)
3. Bolt, 10 x 20 (L: 0.8 in.)
4. Plate, Friction
5. Lever, Position
6. Lever, Position
7. Knob, Black
8. Nut, M8
9. Ring, 8
10. Bearing, 10 x 15
11. Lever ASSY., Control
12. Stay, HYD. Link
13. Pin, 8
14. Washer, 8
15. Rod, Feed Back
16. Washer, 8
17. Pin, 2.0 x 16
18. Nut, 8
19. Adjuster
20. Pin, 5.0 A x 18
21. Pin, 8
22. Washer, 8
23. Lever, Spool
24. Nut, 10
25. Nut, Lock 10
26. Washer, 10
27. Washer, Conical 10
28. Washer, 12

3-3 Hydraulic System

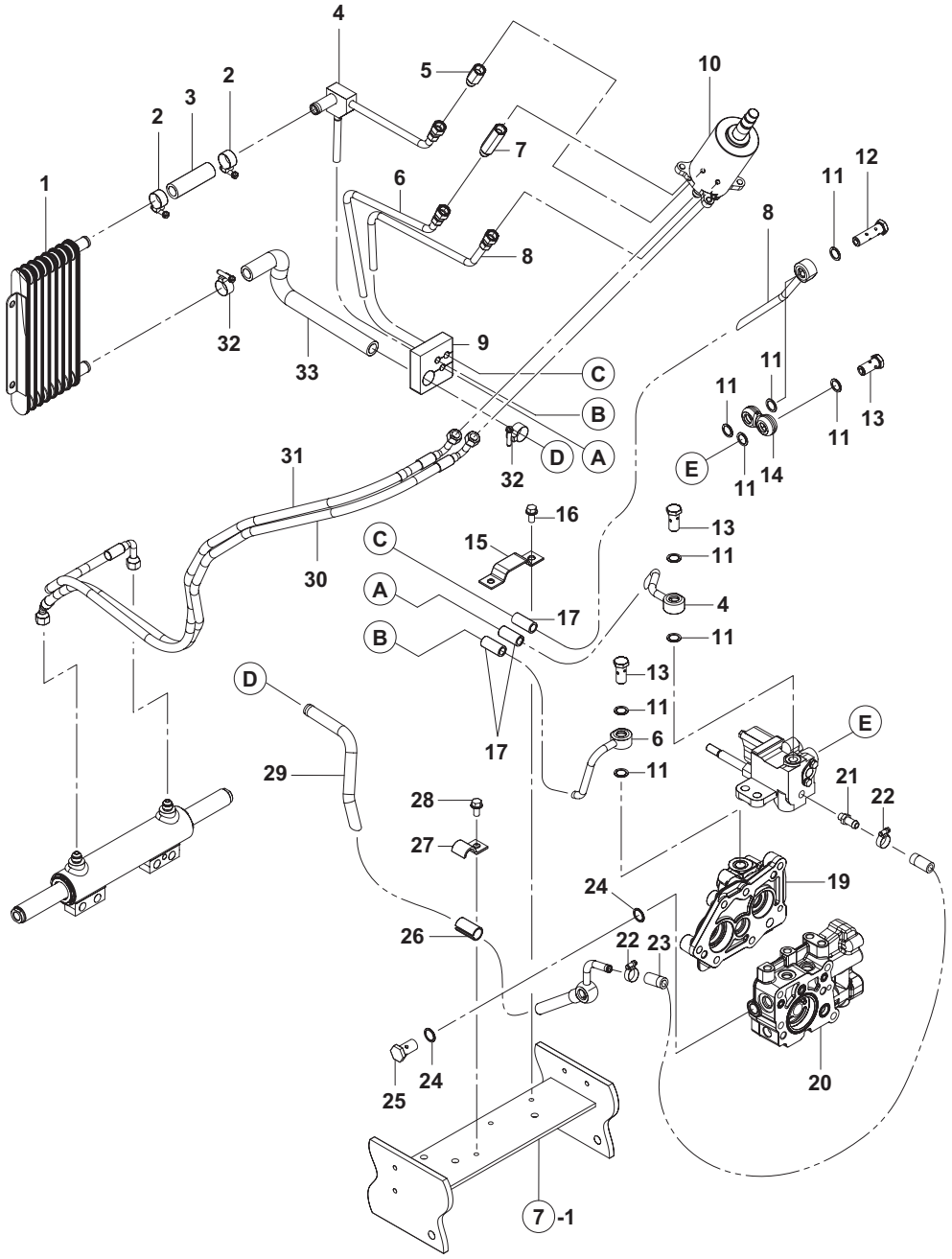

1. Cooler, Oil
2. Clamp, Hose 22
3. LP Hose B (Oil Cooler
4. LP Pipe, Cooler
5. Joint 9 / 16 UNF - 40
6. HP Pipe, Pump
7. Joint 9 / 16UNF - 70
8. HP Pipe, Valve
9. Seal, Pipe
10. Valve ASSY., Steering
11. Gasket, 14 x 1.0
12. Ball Joint BT L 9 / 16
13. Ball Joint Bolt 9 / 16
14. Connector 9 / 16 UNF
15. Clamp, Pipe
16. Bolt, 8 x 16 (L: 0.64 in.)
17. Tube
18. Valve ASSY., Lift
19. PWS - 5 CG SUB
20. Pump Body K93
21. Joint, R 1 / 8
22. Clamp, Hose 19
23. LP Hose, Drain
24. Gasket, 16 x 1.0
25. Bolt, Joint 10
26. Cushion
27. Clamp
28. Bolt, 8 x 16 (L: 0.64 in.)
29. LP Pipe, Tank
30. HP Hose L, PST
31. HP Hose R (PST
32. Clamp, Hose 22
33. LP Hose A (Oil Cooler

4. Theory of Operation

For Hydro Static Transmission (HST) / transaxle, See "Chapter 5. Power Train".

4-1 Function - Power Steering

The hydraulic pump generates hydraulic oil pressure. This oil pressure provides the hydraulic cylinders the power to lift implements or change the direction of the machine.
The power steering pump redirects high pressure hydraulic fluid to the power steering cylinder, dependent upon which hydraulic circuit is called upon for either a right or left hand turn.

4-2 System Structure

The pressurized hydraulic oil from the gear pump flows to the following lines.

(1) Steering hydraulic cylinder:
(1) To the hydraulic steering valve
(2) Regulated or changed the oil flow in the steering wheel valve
(3) To the hydraulic steering cylinder

(2) Implement control valve:
(1) To the implement control valve
(2) Regulated and changed the oil flow in the implement control valve
(3) To the hydraulic couplers
(4) To the implement hydraulic cylinder

(3) Lift cylinder:
(1) To the lift cylinder valve
(2) Regulated and changed the oil flow in the Lift control valve
(3) To the Lift cylinder

NOTE:
●All the hydraulic oil is used from the transaxle case.

4-3 Lift Control Valve

4-3-1 Neutral Position

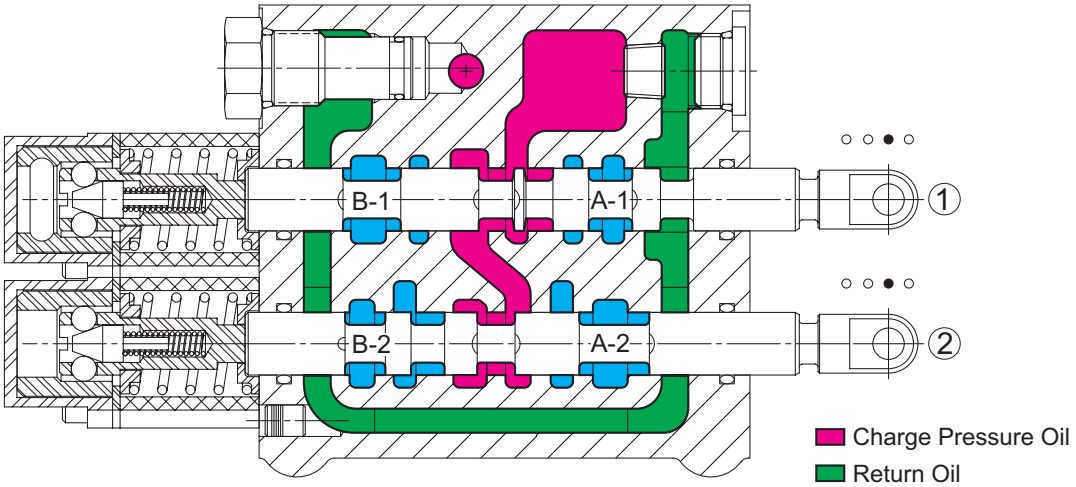

NEUTRAL POSITION, BOTH SPOOLS

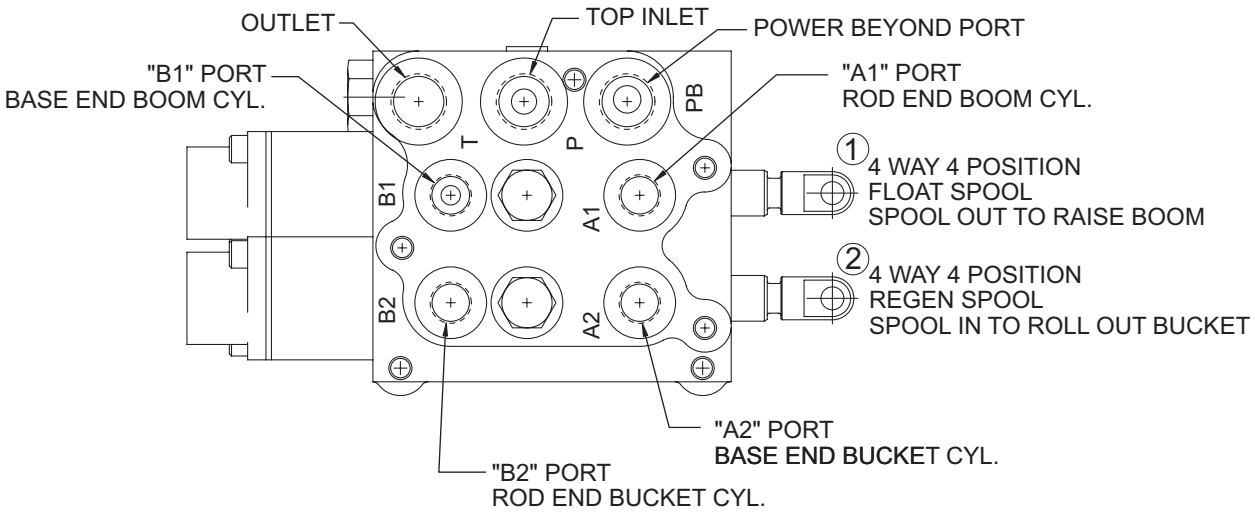

A: A port
B: B port
P: From Hydraulic pump
T: To the oil tank
PB: Power Beyond (High Pressure Carryover)

A sleeve attachment which permits the pressured hydraulic flow from one valve (when in neutral) to be used by another valve downstream.

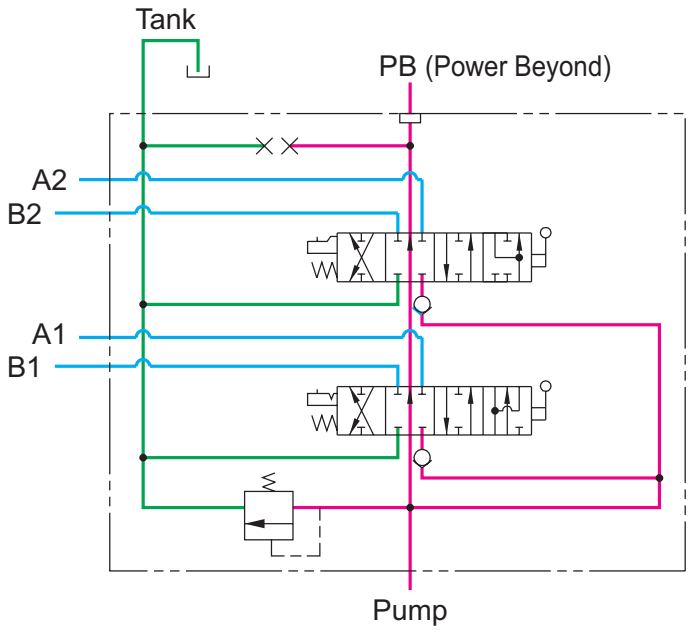

Pressured hydraulic oil is fed to the control valve through Top inlet port.
Since two spools are in neutral position, the pressured hydraulic oil flows to the Oil tank through the Outlet port, as well as Power beyond port.

4-3-2 Raised position

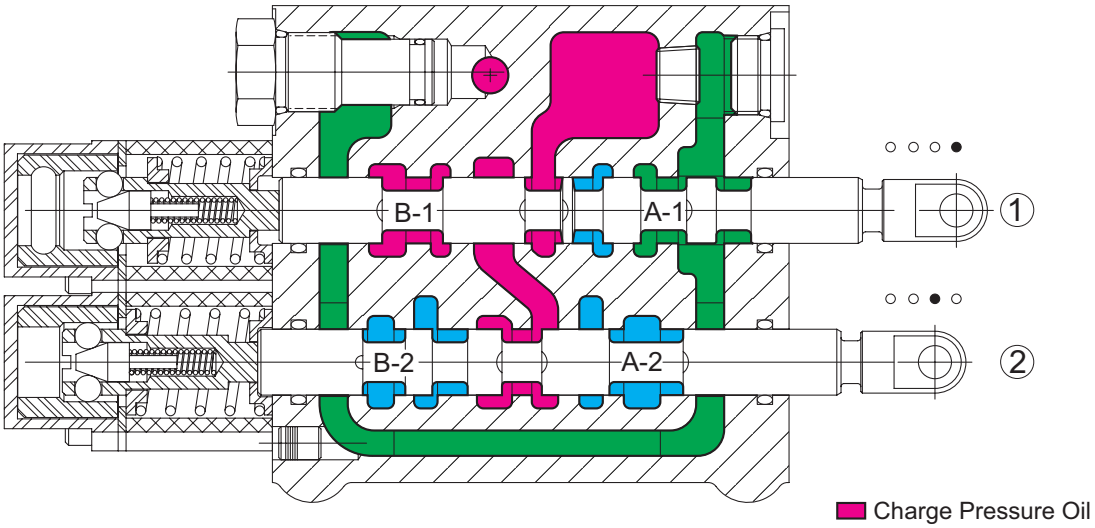

BOOM RAISE
SPOOL 1; OUT POSITION
SPOOL 2; NEUTRAL POSITION

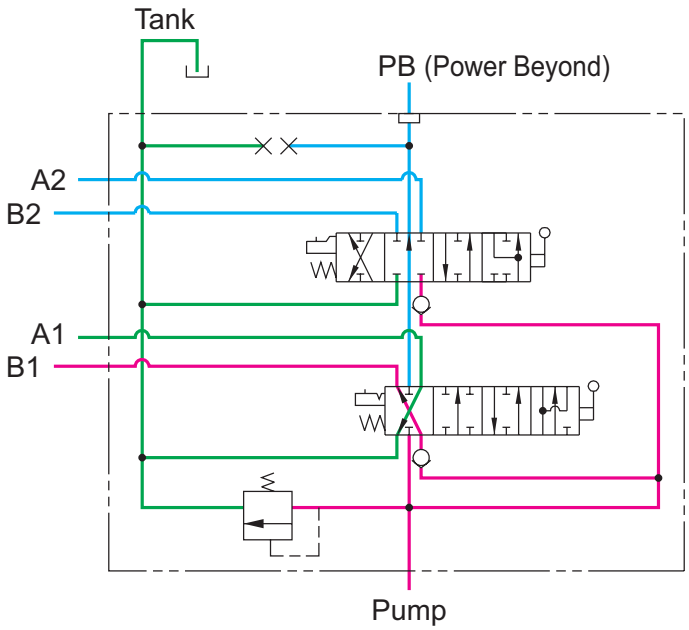

When the spool (1) is out position and the spool (2) is in neutral position, the pressured hydraulic from the inlet port flows to the port (B).

4-3-3 Regeneration position

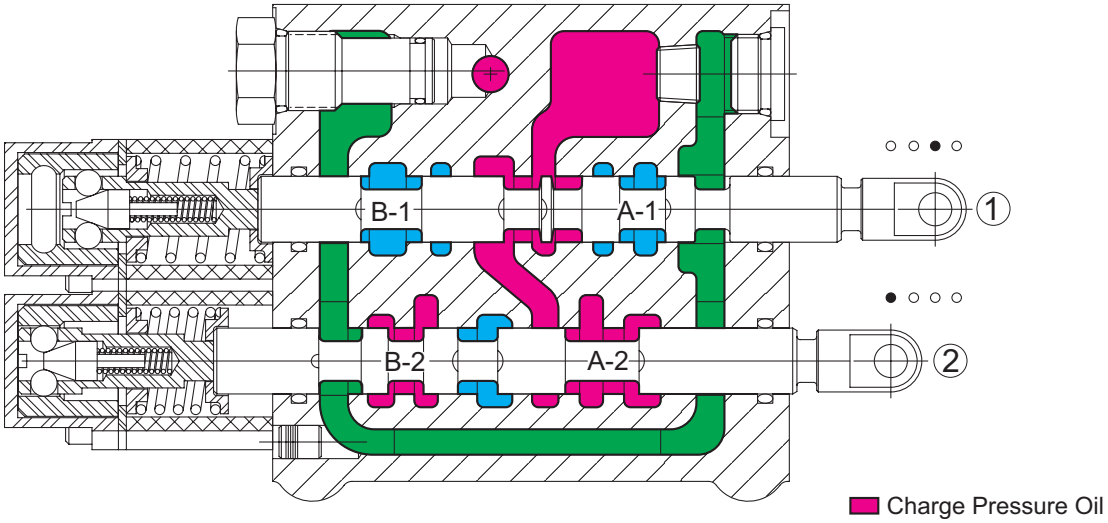

BUCKET REGEN
SPOOL 1; NEUTRAL POSITION
SPOOL 2; FULLY IN POSITION

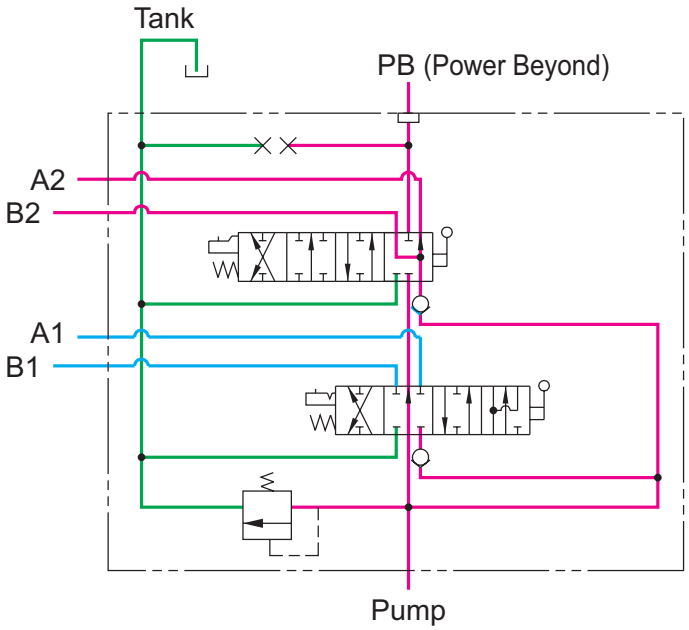

When the spool (1) is in neutral position and the spool (2) is fully inward position, the pressured hydraulic oil is directed to the spool (2) and delivered to the both side of the bucket cylinders.
One of the regen function is to increase the speed of the bucket dumping, if the dumping cylinder has the proper shutoff valve.

4-3-4 Float position

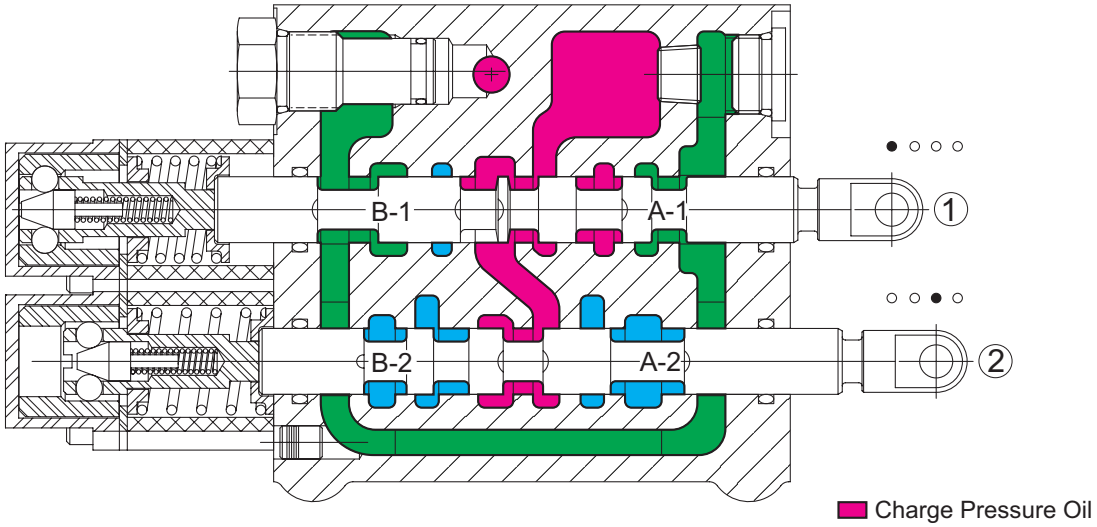

BOOM FLOAT
SPOOL 1; FULLY IN POSITION
SPOOL 2; NEUTRAL POSITION

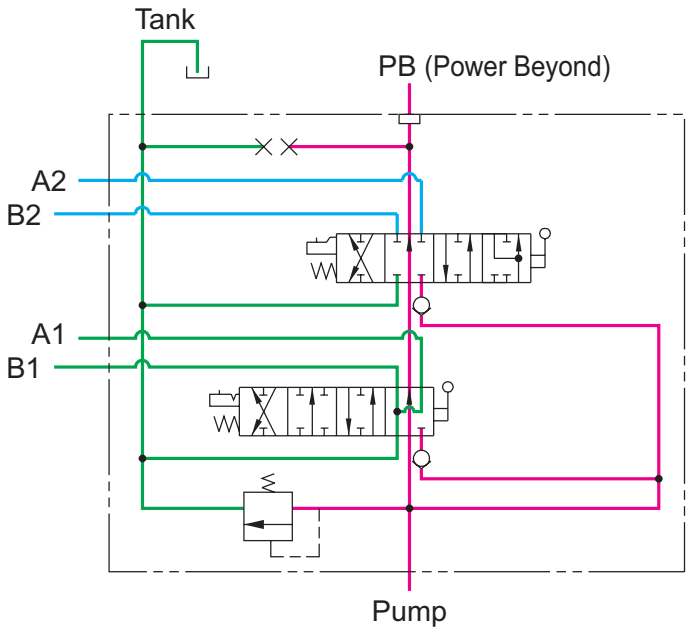

When the spool (1) is in fully inward position and the spool (2) is in neutral position,
"A1" and "B1" are interconnected. In this position, the hydraulic oil is free to move between the rod and the piston sides of the lift control cylinder.

This position allows the lift arms of front loader to move up/down (float) as the loader bucket passing over non-flat terrain.

4-4 Tightening torque

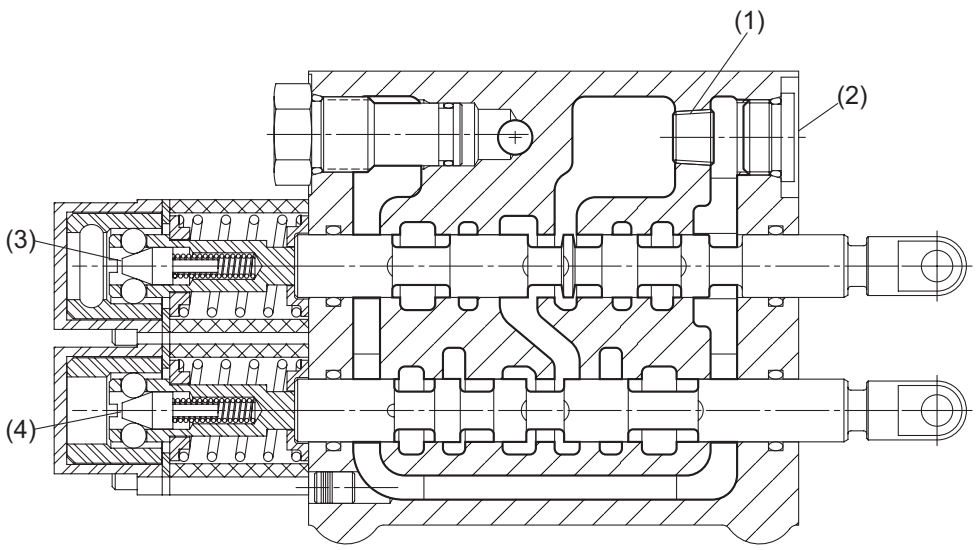

Tightening torque (Implement Control Valve)

REF.	ft·lbs	N·m
1	20 - 22	27.1 - 29.8
2	20 - 25	27.1 - 33.9
3	5 - 7	6.8 - 9.5
4	5 - 7	6.8 - 9.5

The internal components of the implement control valve are machined to close tolerances and matched to the valve body. Therefore the internal components of the implement control valve are not available as individual service parts. If a problem is encountered with the implement control valve, it must be replaced as a complete component.

4-5 3-Point Hitch Control / Cutting Height Adjustment Lever

4-5-1 Neutral

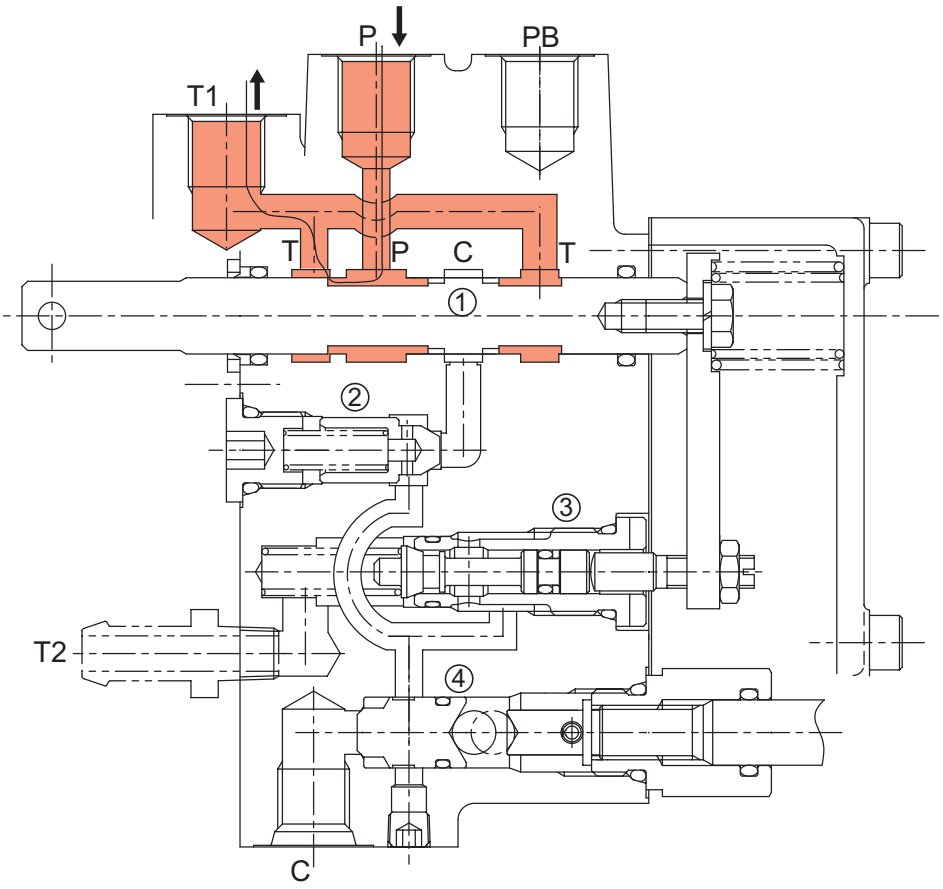

P: From Pump
T: To the Tank
C: From Lift Cylinder

1. Main Spool
2. Poppet Check Valve
3. Sleeve Mechanical Valve
4. Lift Valve

The spool has three (3) positions.
Since the spool blocks the oil flow, the cylinder shaft of the hydraulic cylinder keeps the position.

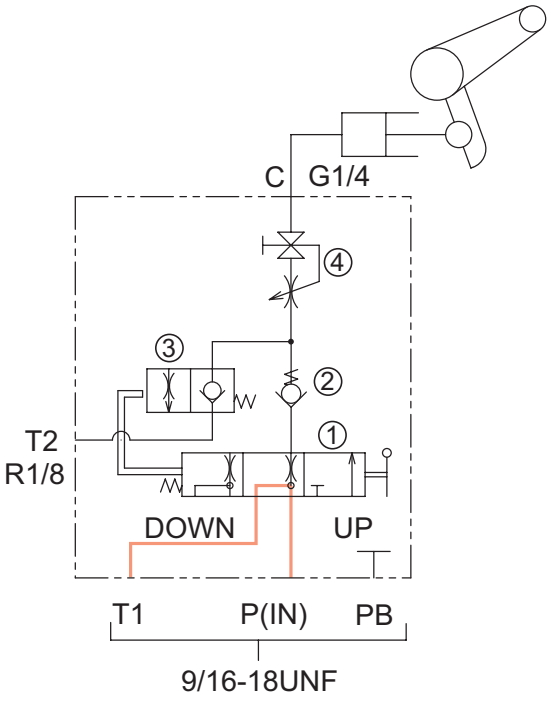

4-5-2 Lower

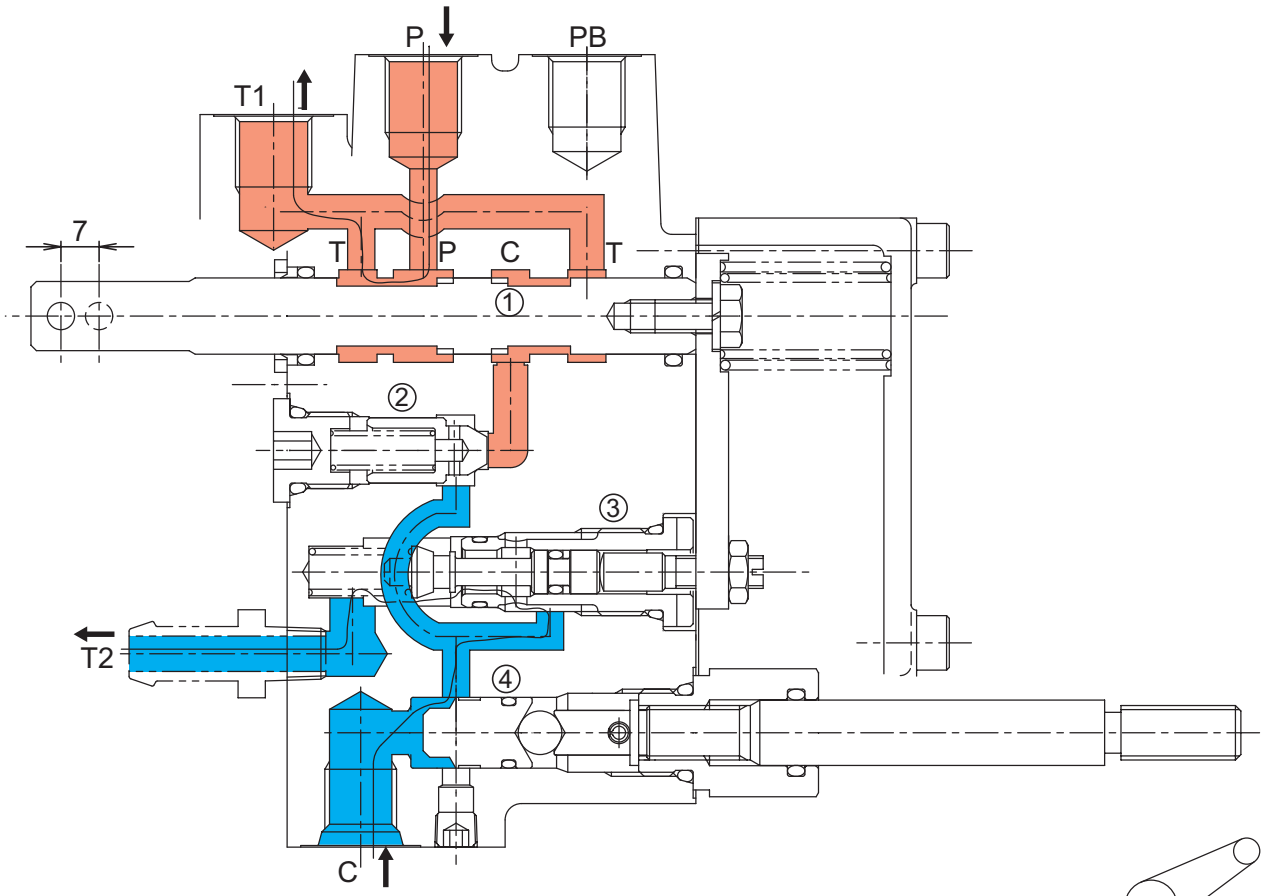

P: From Pump
T: To the Tank
C: From Lift Cylinder

1. Main Spool
2. Poppet Check Valve
3. Sleeve Mechanical Valve
4. Lift Valve

The spool has three (3) positions.
Since the position of the spool is changed to block the pressurised hydraulic from the pump and release the oil in the hydraulic oil in the hydraulic lift cylinder to the tank.

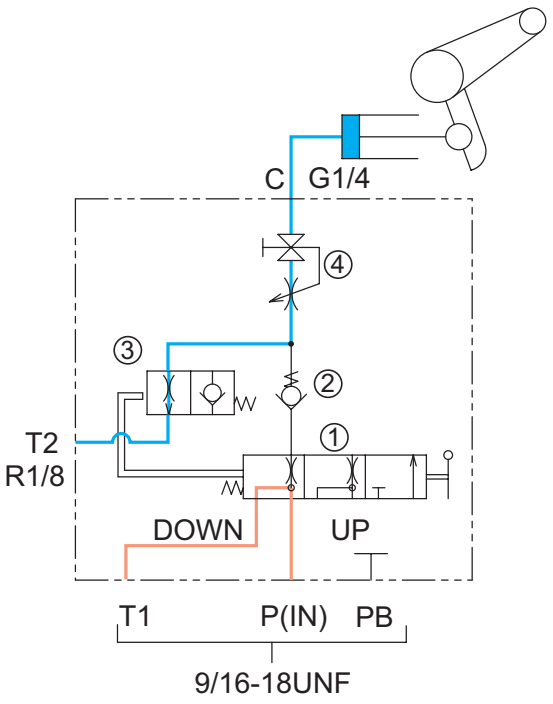

4-5-3 Raise

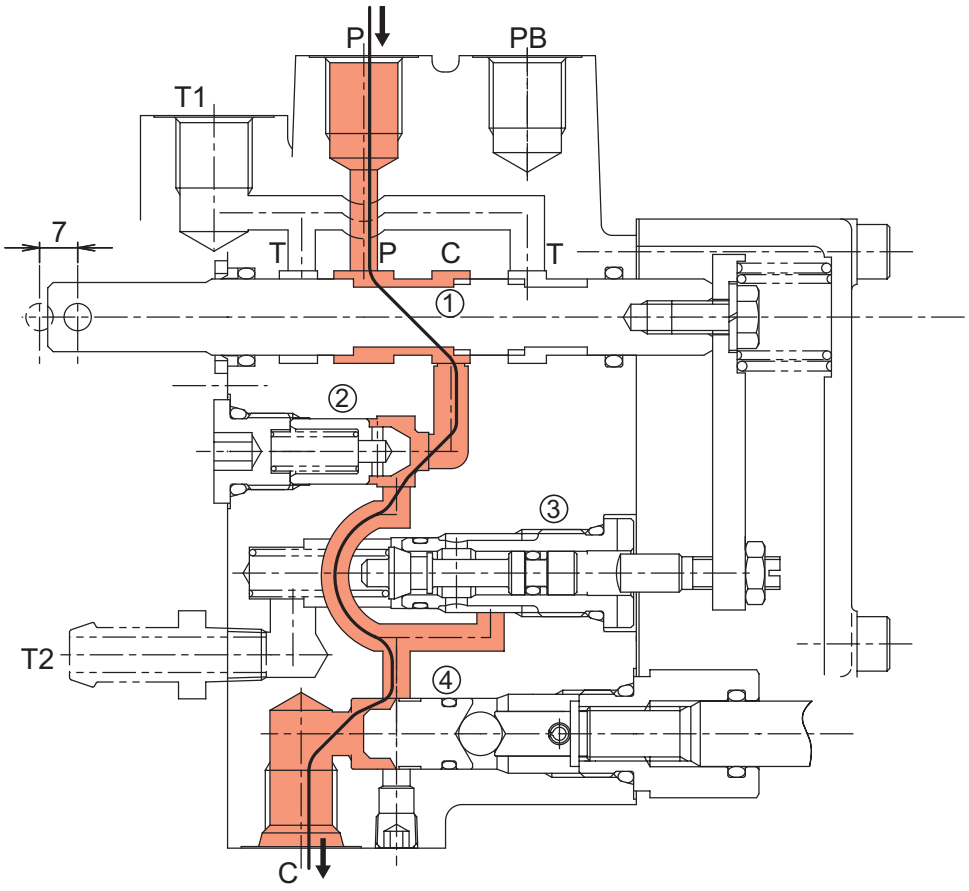

P: From Pump
T: To the Tank
C: From Lift Cylinder

1. Main Spool
2. Poppet Check Valve
3. Sleeve Mechanical Valve
4. Lift Valve

The spool has three (3) positions.
Since the position of the spool is changed to flow the pressurised hydraulic oil to the hydraulic lift cylinder, the piston in the hydraulic lift cylinder is raised.

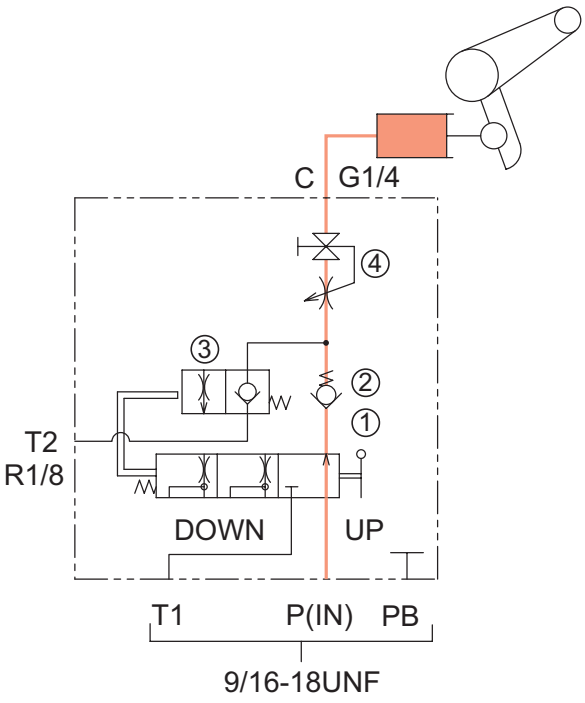

5. Diagnostics

5-1 Implement Control Valve

5-1-1 Pre-Check

Test Preparation

- Machine & Engine: Off
- Machine is on hard leveled surface with parking brake engaged.
- All (4-tire) are chocked.

(1) Hydraulic system (Condition: Engine stopped)

(A)

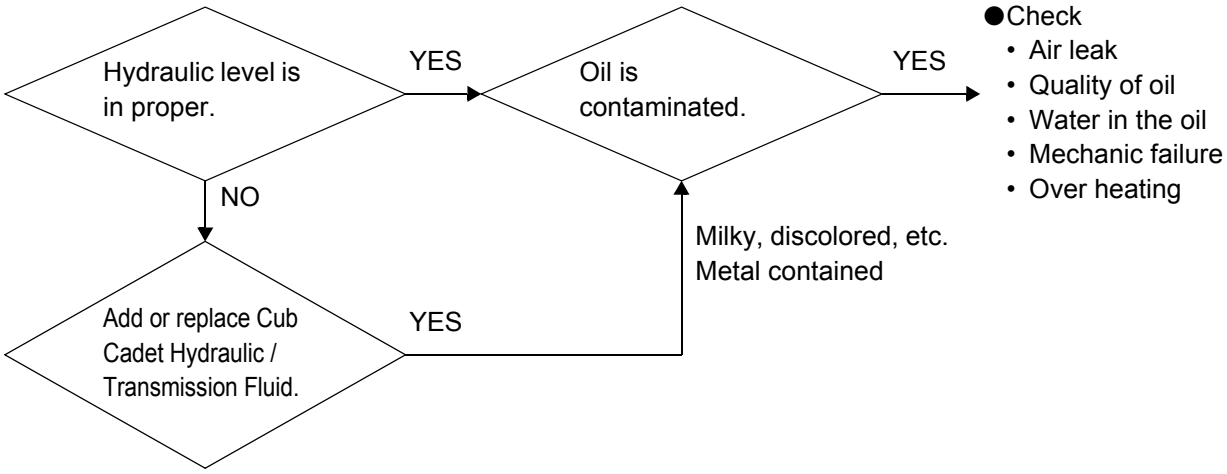

(B)

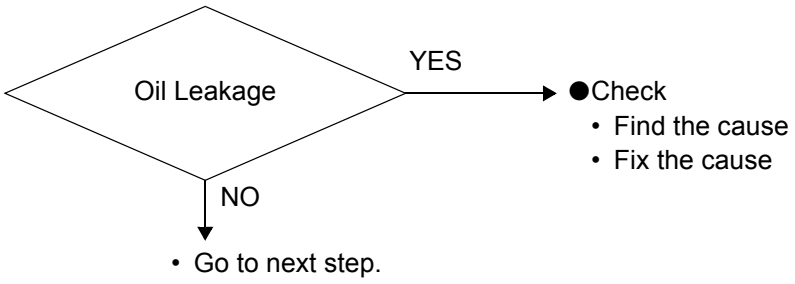

(C)

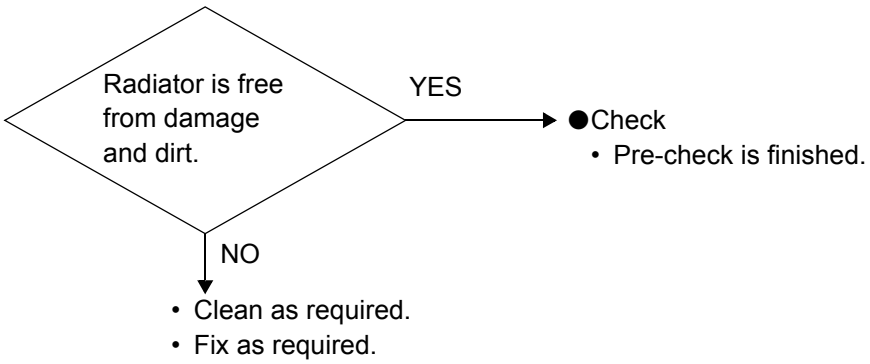

(2) Hydraulic system (Condition: Engine running)

(A) Steering

- Steering response is in improper.
- Steering can be kept easily straight.
- Steering is not over rotating.

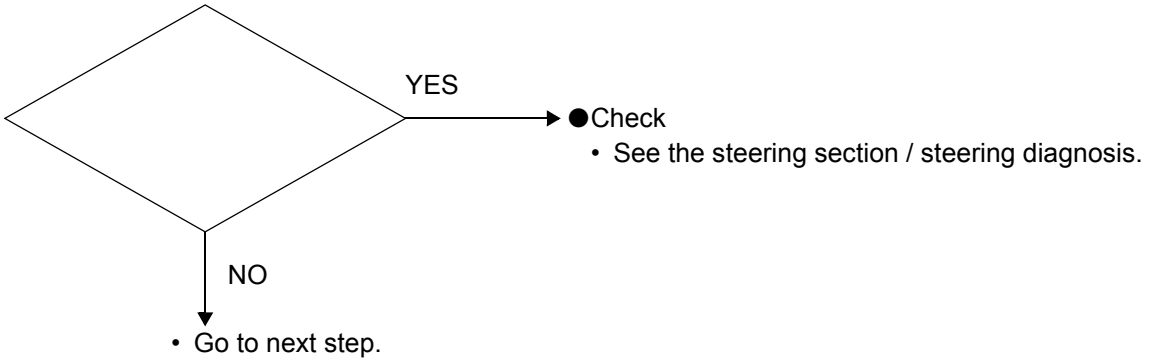

(B) Lift cylinder control lever

- Implement should raise.
- Implement should not be lowered when in neutral position (shorter than 4 minutes).

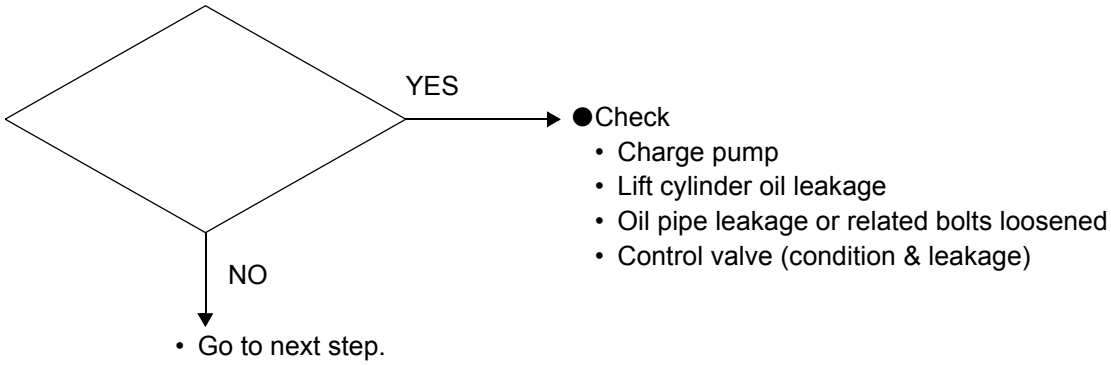

(C) Implement control lever

- Proper pressure from the couplers.
- The implement can be kept in the position when in neutral.

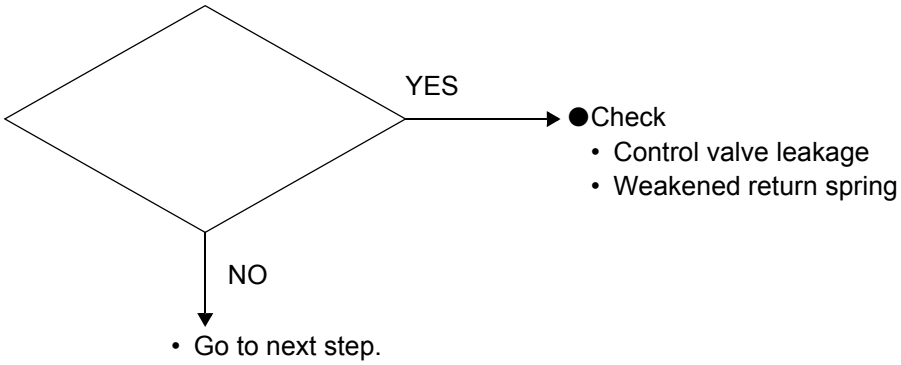

(D) Forward and reverse drive pedal

- Speed control response is improper.
- In neutral, the machine stops on a hard level surface.

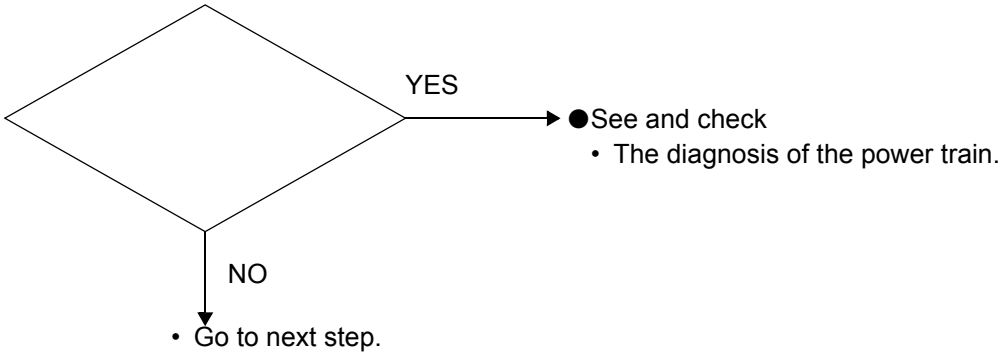

5-2 Lift Cylinder System

Test Preparation

- Stop engine and wait for more than 30 minutes.
- Engage parking brake securely.
- Park machine on hard level surface.

(1) Check procedure (Condition: Engine stopped)

(A) Hydraulic oil

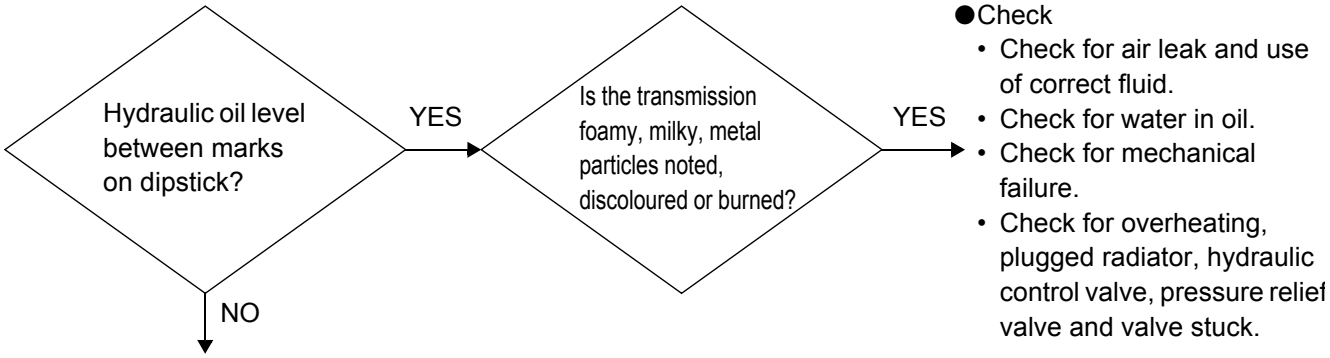

If one of the above is confirmed, clean the transmission inside and change the oil. After the engine is on for a while and stop the engine. And confirm the transmission oil condition. If the same problem is confirmed, change the parts as required.

(B) Oil leakage

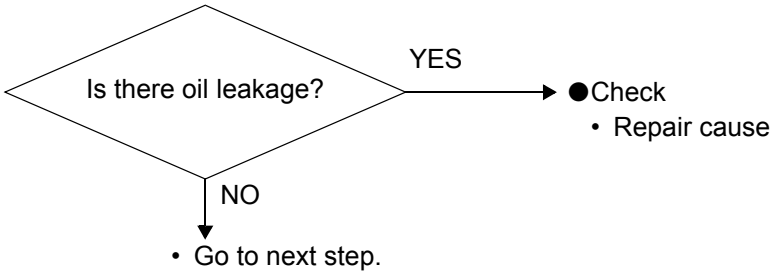

(C) Radiator screen and agitator fin

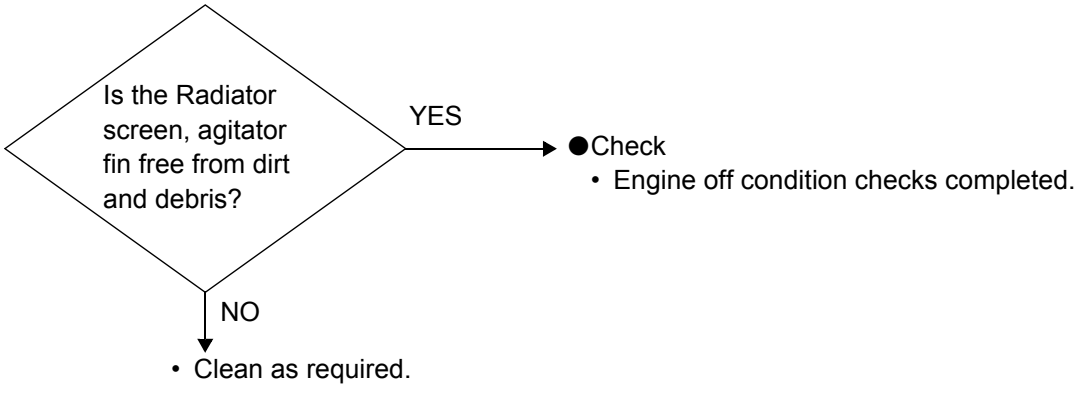

(2) Check procedure (Condition: Engine running)

(A) Steering

- Is the steering working properly?
- Is the steering stopped after full turn?

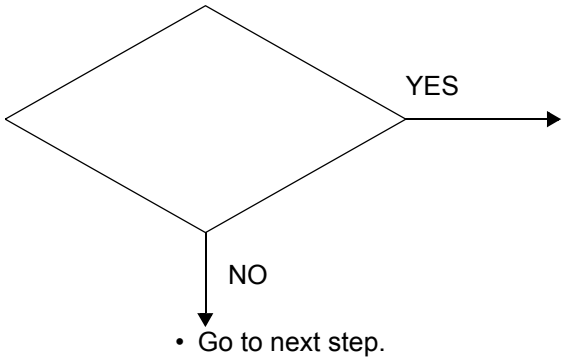

●Check
- See the Steering section for steering system diagnosis.

- Go to next step.

(B) Implement cylinder

- Is the implement cylinder raised when the lift cylinder control lever pulls the 3-point hitch control adjustment lever to the raised position?

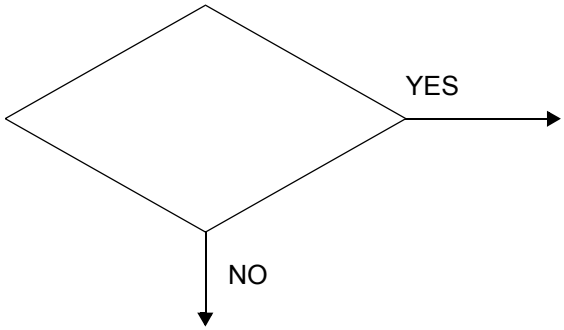

●Check
- Check the gear pump with the flow meter. If the gear pump does not produce 5 cc/sec volume, replace it.

- Go to next step.

5-3 Lift Control Valve

(1) Even 3-point hitch control / cutting height adjustment lever is raised, implement can not be lifted

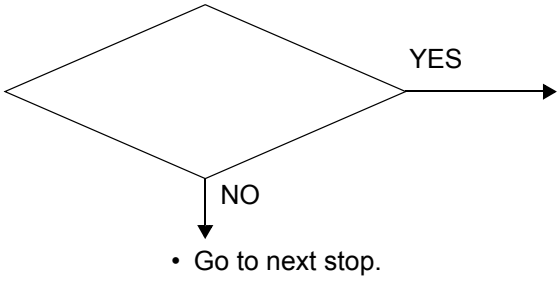

●Check
- Linkages are not connected properly
- Relief valve setting
- Safety valve
- Oil leakage from O-ring, packing or seal
- Oil leakage from cylinder piston seal
- Suction filter plugged
- Oil level in the transaxle
- Oil condition

(2) Even 3-point hitch control / cutting height adjustment lever is lowered, implement can not be lowered

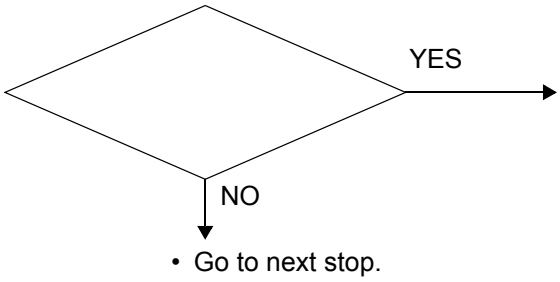

●Check
- Hydraulic flow control / stop knob is closed
- The oil hole in the spool is plugged
- Poppet valve is malfunctioning
- Oil condition

(3) When 3-point hitch control / cutting height adjustment lever is not lowest position, implement can not keep the same position

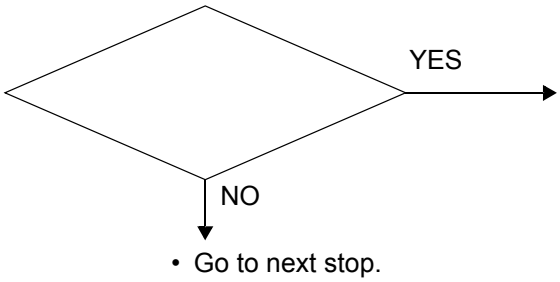

●Check
- Chocked in lift control valve
- Wearing out of spools in the lift control valve
- Leakage in the hydraulic cylinder
- Leakage from control valve / hydraulic pipe

6. Tests and Adjustments

6-1 Lift Lever Adjustment

1. Raise position lever (Fig. 1, (A)) to its upper limit.
2. Lengthen feedback rod (Fig. 3, (B)) enough to extend lift cylinder to max. In this condition, ensure that relief valve functions.
3. In this condition, move adjuster nut (Fig. 3, (C)) so as to shorten feedback rod (Fig. 3, (B)) and temporarily set feedback rod (Fig. 3, (B)) at position where relief valve becomes disabled by turning engine to max.
4. Turn adjuster nut (Fig. 3, (C)) two turns so as to further shorten feedback rod (Fig. 3, (B)) and lock with lock nut (Fig. 3, (D)).
5. Ensure that extended stroke of cylinder is $4.5\,^{0}_{-0.2}$ in. ($116\,^{0}_{-4}$ mm) when position lever is raised to max.

NOTE:

- Tightening torque of bolt or nut is according to table below unless otherwise specified.
- Apply Shell's Alvania grease to (a)-marked areas.
- Set force at lever end of coned disc spring section (F) to 5.6±1.1 lbs (25±5 N) for down operation.

Bolt Diameter	ft·lbs	N·m	kg·m
6 mm	6 to 9	8 to 12	0.8 to 1.2
8 mm	17 to 22	23 to 29	2.3 to 3.0
10 mm	33 to 43	44 to 59	4.5 to 6.0
12 mm	58 to 72	78 to 98	8.0 to 10.0
14 mm	87 to 109	118 to 147	12.0 to 15.0
16 mm	123 to 152	167 to 206	17.0 to 21.0
18 mm	174 to 210	235 to 284	24.0 to 29.0
20 mm	239 to 297	324 to 402	33.0 to 41.0

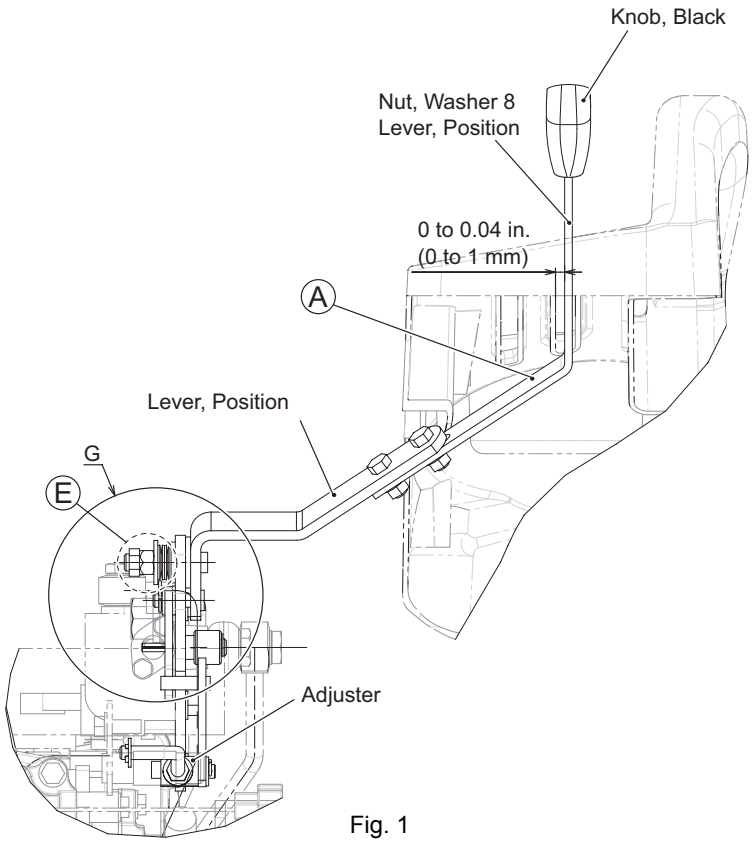

Fig. 1

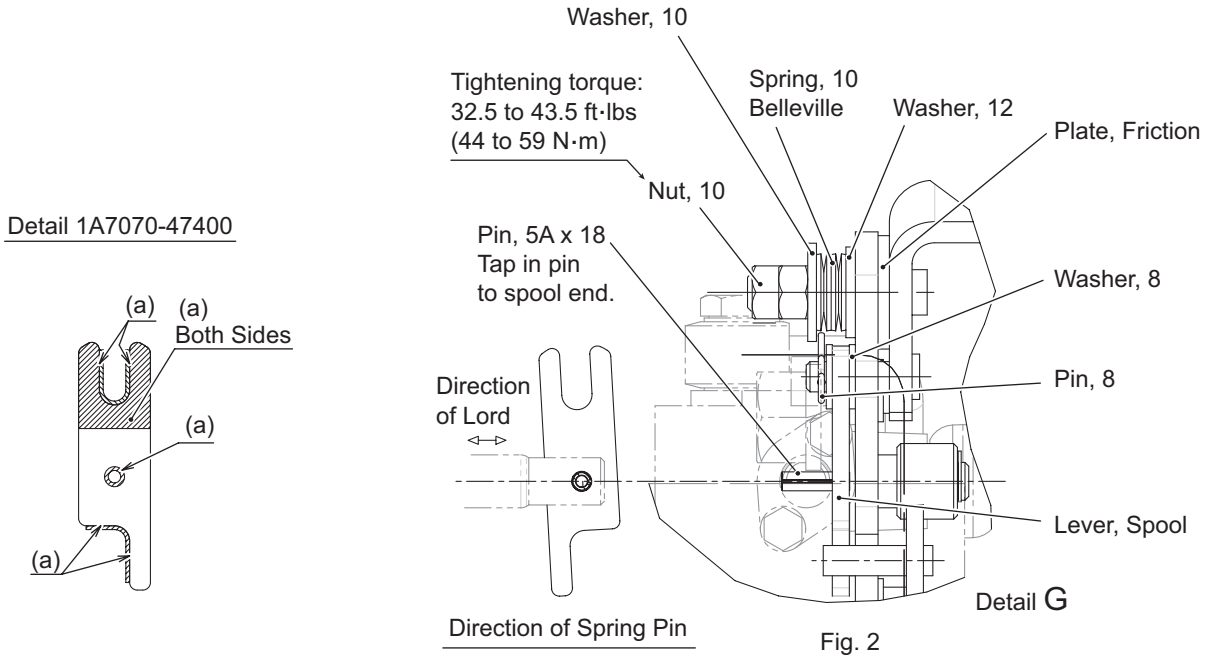
Washer, 10
Tightening torque:
32.5 to 43.5 ft·lbs
(44 to 59 N·m)
Spring, 10
Belleville
Washer, 12
Plate, Friction
Nut, 10
Detail 1A7070-47400
Pin, 5A x 18
Tap in pin
to spool end.
Washer, 8
(a)
(a)
Both Sides
(a)
(a)
Direction
of Lord
Pin, 8
Lever, Spool
Detail G
Direction of Spring Pin

Fig. 2

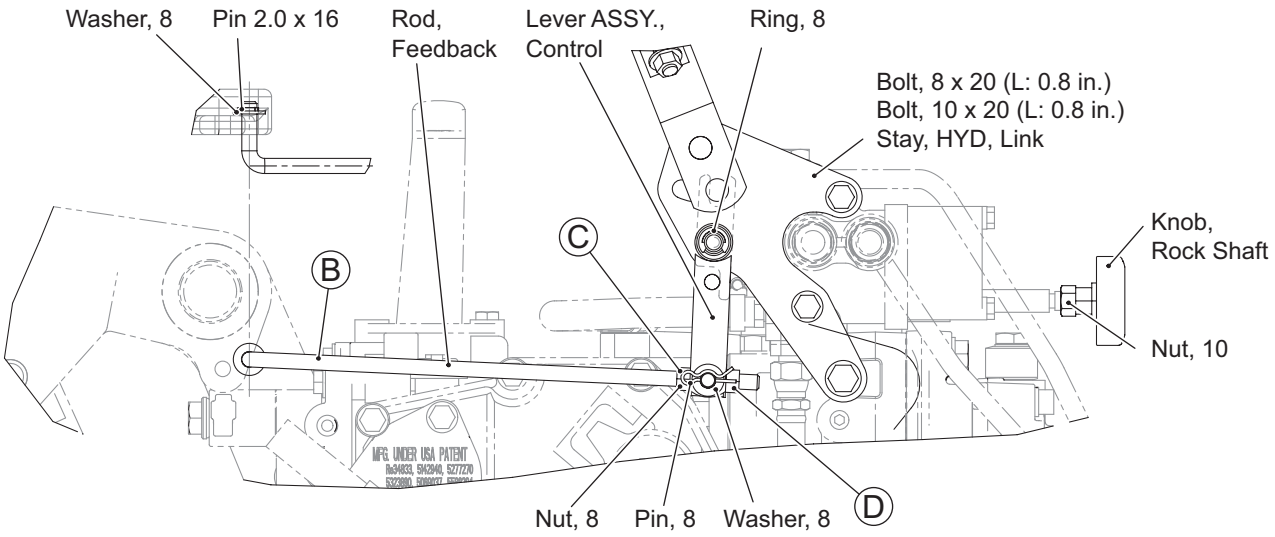
Washer, 8
Pin 2.0 x 16
Rod,
Feedback
Lever ASSY.,
Control
Ring, 8
Bolt, 8 x 20 (L: 0.8 in.)
Bolt, 10 x 20 (L: 0.8 in.)
Stay, HYD, Link
Knob,
Rock Shaft
C
B
Nut, 10
MFG. UNDER USA PATENT
Nut, 8
Pin, 8
Washer, 8
D

Fig. 3

6-2 Warming Up the Hydraulic Oil

Reason:
For accuracy during hydraulic tests, the oil must be warmed up to normal operating temperature.

Required items:

Temperature gauge	

Procedure:
1. Apply the parking brake.
2. Install a temperature gauge on the transmission's oil filter.
3. Start the engine and accelerate to full throttle.

⚠ CAUTION

●To prevent damage, make sure that the engine does not overheat.

4. Hold the implement control lever in the raise-implement position.
5. Run through all of the tractor's hydraulic functions at regular intervals in order to evenly distribute the heated oil.
6. Make sure that the oil is warmed up to the normal operating temperature (usually 100 to 120°F (38 to 49°C)).

6-3 Testing the Charge Pump Pressure and Flow

Reason:
Perform this test in order to check the condition of the gear pump and thus verify whether or not there is sufficient oil flow for operating the implements.

NOTE:

- Make sure that the steering valve, hydraulic control valve and lift cylinder are working properly. The results of this test can be unreliable if any of these are malfunctioning.

6-3-1 Testing the charge pump pressure

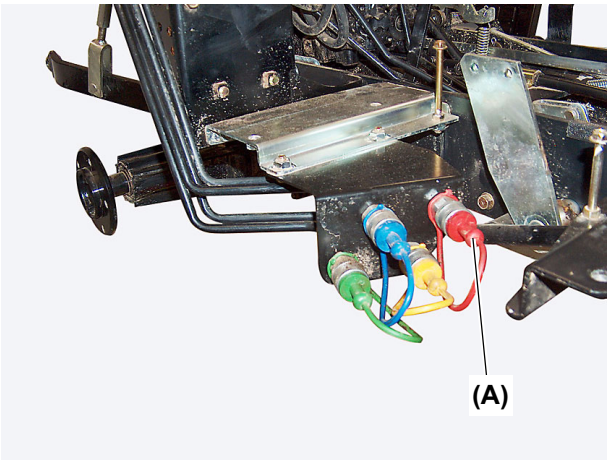

Fig. 1

(A) Coupler

Procedure:

1. Find the hydraulic control valve on the right side of the tractor frame and install the pressure gauge at the coupler (Fig. 1, (A)).
2. Start the engine and run it at a high idle.
3. Move the auxiliary implement control lever to either the raise- or lower-implement position.
4. Check the reading on the pressure gauge.

Results:

- If the gauge reading for the charge relief flow is to specifications (13L/min. (at 3300 rpm)), the pump is working properly.
- If there is no pressure, repeat the test using a different coupler. If there is pressure at the second coupler, replace the first coupler and repeat the test.
- If the relief pressure is less than 12500 kPa (1812 psi).

6-3-2 Testing the charge pump flow

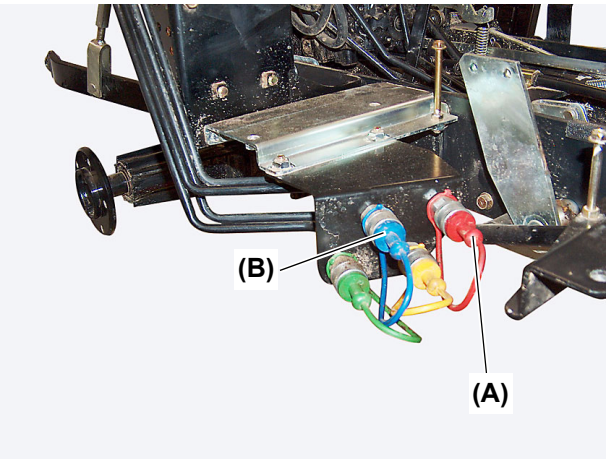

Fig. 2

(A) Work port
(B) Work port

Procedure:

1. Connect the flowmeter to work ports (Fig. 2, (A)) and (Fig. 2, (B)) and open the flowmeter control valve.
2. Start the engine and run it at a high idle.

NOTE:

●Make sure that the oil is at normal operating temperature (100 to 120 °F (38 to 49 °C)).

3. Move the cylinder lift control lever to flow oil through the meter in the proper direction.
4. Check the reading on the flowmeter.

Results:

●If the reading for the pump flow is between the minimum and rated specifications, the pump is working properly.

●If there is no flow from the pump, check the following:
- Is the drive shaft turning the input shaft?
- Is the charge pump drive key sheared?
- Is the charge pressure control valve stuck closed?

●If the pump flow is less than specifications, or the reading is erratic, check the following:
- Is the hydraulic oil level correct?
- Is the charge pressure correct?
- Is the filter in good condition? (If not, replace it and perform the flow test again)
- Is the transaxle vent plugged or the filter seal leaking?
- Is there any damage or debris that could be keeping the charge pressure relief valve from closing?
- Is there any scoring or debris that could be keeping the charge pressure control valve from opening?

●If the pump flow is still below the minimum flow specifications, check the following:
- Is the oil ring/O-ring at the charge pump's inlet leaking?
- Is the case between the filter and the charge pump leaking?
- Is the charge pump damaged?

●If the cause of the trouble cannot be located, perform the procedure described in "Chapter 5. POWER TRAIN - HYDROSTATIC , 6-3 Testing the Charge Pump Pressure and Flow", page 6-26 to eliminate the possibility of erroneous results due to malfunctioning of the steering valve or hydraulic control valve.

Specifications:

Charge pump	5cc x 2726 at 3300 rpm
Rated flow	3L/min. (3.2 gmp)

6-4 Testing for Leaks in the Lift Cylinder

Reason:
Perform this test in order to check the lift cylinder for leaks.

⚠ CAUTION

To prevent injury, avoid coming in contact with any escaping fluid. The fluid is under high pressure and can puncture your skin and result in serious injury.

- Be sure to relieve all pressure before disconnecting the hydraulic and other lines. Also, tighten all connections before applying pressure.
- Use a piece of cardboard or other stiff material to search for leaks; DO NOT use your hands alone.
- Wear appropriate gloves and/or clothing and keep your hands and body away from the high-pressure fluids.
- If an accident does occur, immediately consult a physician. Any fluid that gets under the skin must be removed surgically within the first few hours or it may cause gangrene. Physicians who are not familiar with this type of injury should reference a knowledgeable medical source.

Procedure 1:



Fig. 1

(A) Hydraulic cylinder ASSY.

1. Remove any mounted implements, including the mower deck.
2. With the deck lift arms in their raised position, turn off the engine.

IMPORTANT

- To prevent damage, be sure to hold the implement control lever in the raise-implement position when starting the engine. Failure to do so will cause oil to flow out of any leaking valve or port, so be prepared to quickly turn off the engine if you notice any leaking oil.

3. Move the implement control lever to the raise-implement position, start the engine, and run it at a low idle.
4. Check the cylinder rod end line for any continuous oil leaks.

Results:

- If hydraulic oil continually leaks out of the fitting, replace the lift cylinder. If there is no leakage, continue with the second check.

Procedure 2:

1. Turn off the engine and connect the line.
2. Start the engine again and lower (retract) the cylinder.
3. Turn off the engine and disconnect the line.
4. Hold the implement control lever in the lower-implement position, start the engine, and check the flow from line.

Results:

●If there are no leaks, the cylinder is working properly. If there is a leak, replace the cylinder.

7. Annex

7-1 Lift Control Valve

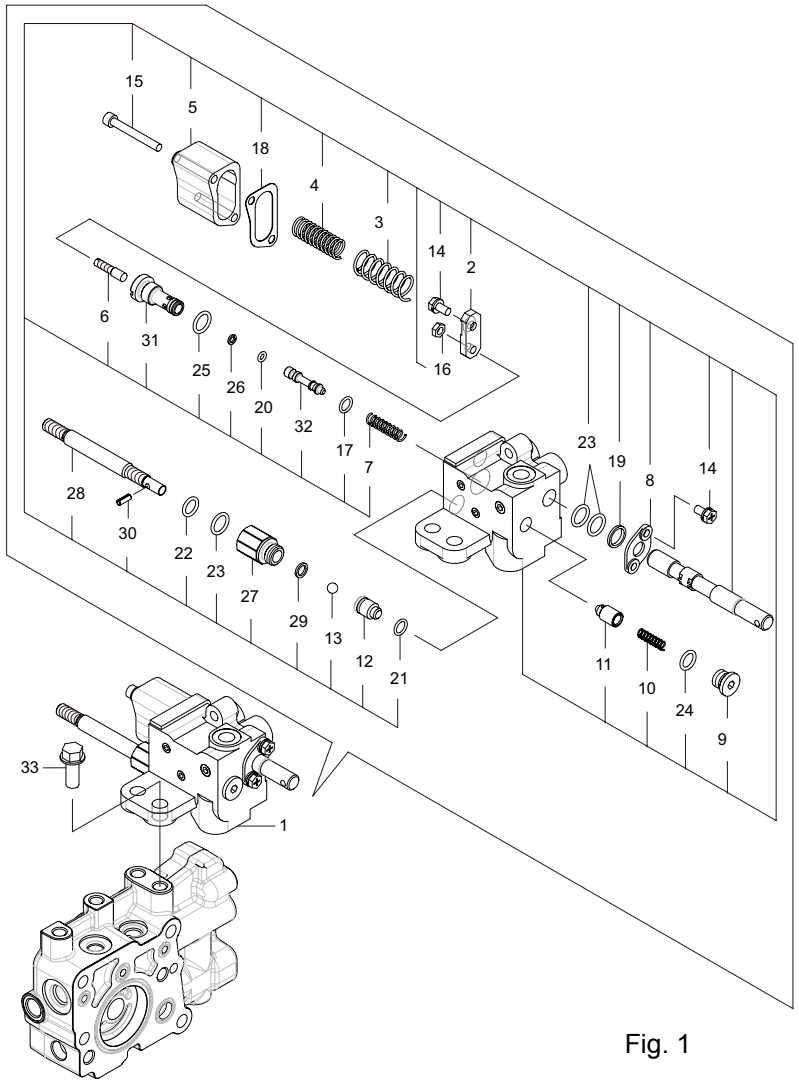

Fig. 1

REF.	Description	Q'TY.
1	Valve ASSY, Lift	1
2	Plate, Lift Valve	1
3	Spring, Lift Valve	1
4	Spring, Lift Valve	1
5	Cover, Lift Valve	1
6	Push Rod, Lift Valve	1
7	Spring, Mechanical, Valve	1
8	Plate, Lift Valve	1
9	Plug, Lift Valve	1
10	Spring, Lift Valve	1
11	Poppet, Check, Valve	1
12	Plunger, Lift Valve	1
13	Ball, 5/16	1
14	Bolt, 6 x 12 (L: 0.48 in.)	3
15	Bolt, 6 x 50 (L: 2.0 in.)	2
16	Nut, 6	1
17	O-ring, Lift Valve	1
18	Packing, Lift Valve	1
19	Dust Seal, Lift Valve	1
20	Packing, P 5.0	1
21	Packing, P 10.0	1
22	Packing, P 12.0	1
23	Packing, P 14.0	3
24	Packing, P 12.0	1
25	Packing, P 14.0	1
26	Ring, Backup T2 P 5	1
27	Guide, Lift Valve	1
28	Shaft, Lift Valve	1
29	Washer, Lift Valve	1
30	Pin, 4.0a x 12 (L: 0.48 in.)	1
31	Sleeve, Mechanical, Valve	1
32	Spool, Mechanical, Valve	1
33	Bolt, 10 x 5 (L: 0.2 in.)	2

NOTE:

- ●Repair Parts Kit.(Including Ref. #17 to 26)
- ●Repair Parts Kit.(Including Ref. #22, 23, 27 to 30)
- ●Repair Parts Kit.(Including Ref. #20, 25, 26, 31 to 33)

Tightening torque

REF	ft·lbs	N·m
9	6.74 +/- 1.35	30 +/- 6.0
14	1.35 +/- 0.27	6.0 +/- 1.2
15	2.70 +/- 0.5	12 +/- 2.4
27	6.74 +/- 1.35	30 +/- 6.0
31	4.50 +/- 0.90	20 +/- 4.0

7-1-1 Removing

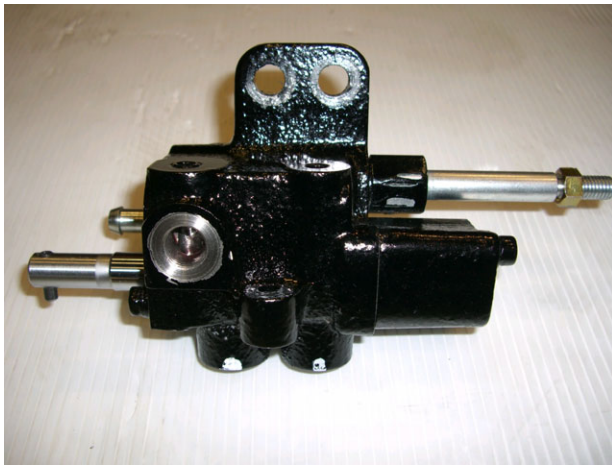

Fig. 2



Fig. 3

1. Remove the 6 x 50 (L: 2.0 in.) bolt (Fig. 1, (Ref. #15)) (See page 6-33).
2. Remove the cover (Fig. 1, (Ref. 5)) (See page 6-33).
3. Remove the 6 x 12 (L: 0.48 in.) bolts (Fig. 1, (Ref. #14)) and plate lift valve (Fig. 1, (Ref. #8)) and main spool (See page 6-33).
4. Unscrew sleeve, mechanical, valve (Fig. 1, (Ref. #31)) and plug, lift valve (Fig. 1, (Ref. #12)) and remove the related parts (See page 6-33).
5. Remove guide, lift valve (Fig. 1, (Ref. #27)) (See page 6-33) and other related parts.

7-1-2 Assembly

Assembly can be done with the reverse sequence of "Removing".



IMPORTANT

Avoid Damage!

- Never use the damaged or used O-ring.
- The damaged and used O-ring may cause the leakage.
- When the parts are disassembled, check the scratch or damaged parts, if there are any, replace them.
- The parts should be assembled as disassembled.
- The parts are serviced as " repair parts kit" only.

7-1-3 Specifications for Repair

1. Leakage (Raised at highest point) (P → T1): Less than 3.05 cubic inches (50 cubic cm)
2. Hydraulic flow control / stop valve position- keeping performance: Less than 0.006 cubic inches/min (0.1 cubic cm/min)
3. Outside leakage: Nil

7. STEERING

1. Table of Contents

2. Component Location 7-3
2-1 Steering Components 7-3
3. Theory of Operation 7-4
3-1 Function 7-4
3-2 System Structure 7-5
4. Diagnostics 7-9
4-1 Steering Diagnostics 7-9
5. Tests and Adjustments 7-11
5-1 Steering Tests and Adjustment 7-11

2. Component Location

2-1 Steering Components

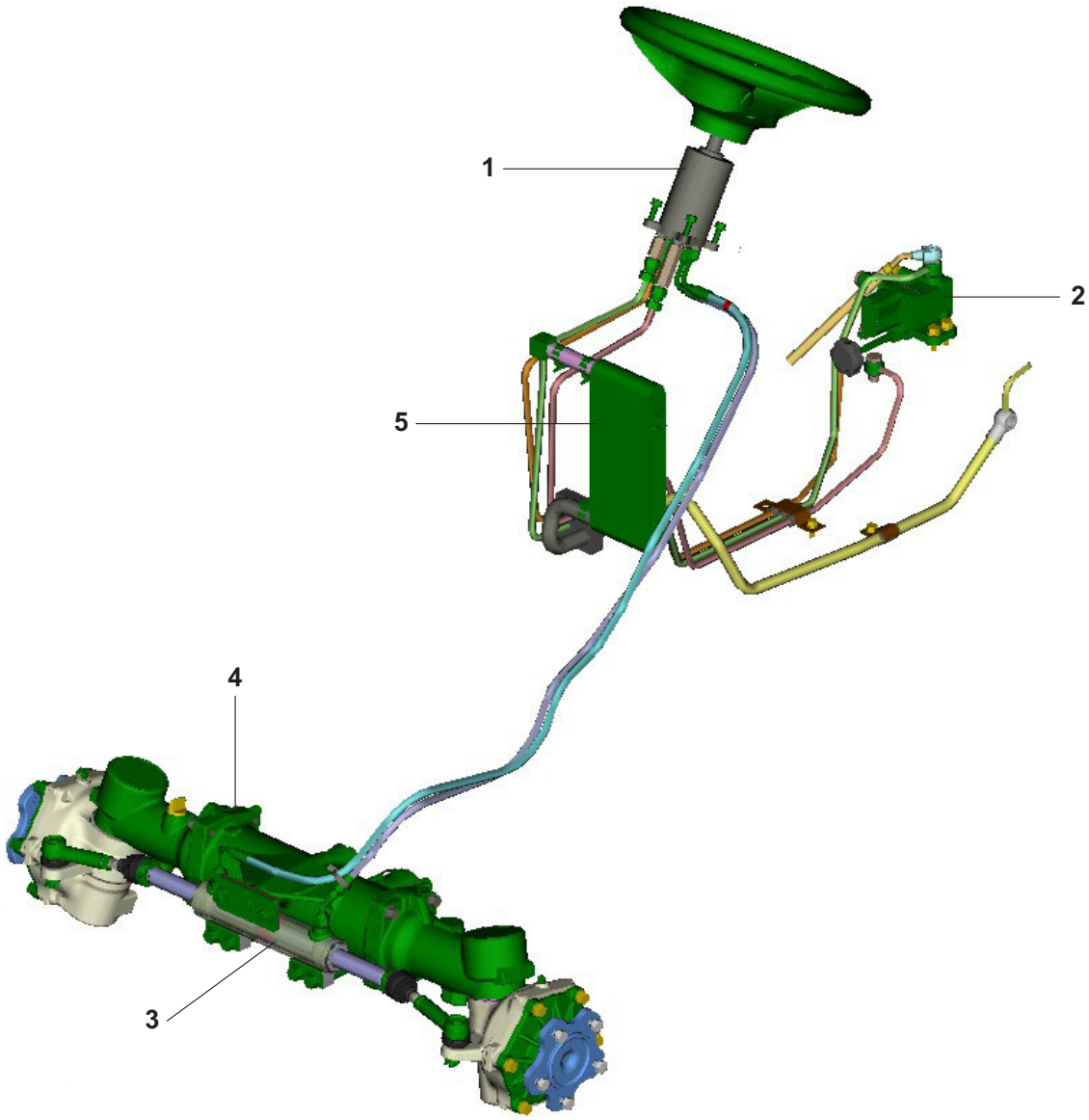

1. Valve ASSY., Steering
2. Valve ASSY., Lift
3. Cylinder ASSY., PST
4. Front Axle
5. Cooler, Oil

3. Theory of Operation

3-1 Function

The power steering system is to flow pressurized oil to the hydraulic cylinder when the steering wheel is being turned and not to flow the pressured oil to the hydraulic steering cylinder when driving in straight line.

This power steering valve is so-called "Rotary valve".

3-2 System Structure

The main components of this power steering valve consists of the following main items.
The power steering valve internal components are shown for informational purposes only. The internal components are not available as individual service parts. If a problem is encountered with the power steering valve, it must be replaced as a complete component.

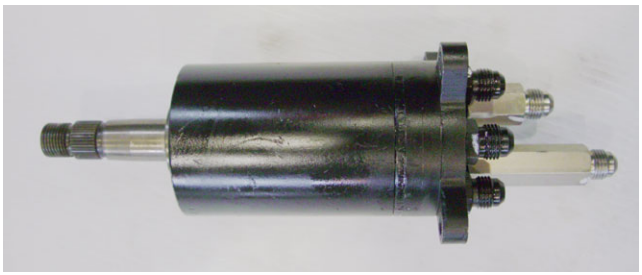

Fig. 1

(A) Screw
(B) O-Ring
(C) End Cover
(D) O-Ring
(E) Gerotor
(F) Plate
(G) Sleeve
(H) Spring
(I) Pin
(J) Shaft
(K) Spacer
(L) Ball
(M) Bearing
(N) Shaft Seal
(O) Spacer
(P) Cardan Shaft
(Q) Plate
(R) Bearing
(S) Bearing
(T) Valve PST
(U) Dust Seel

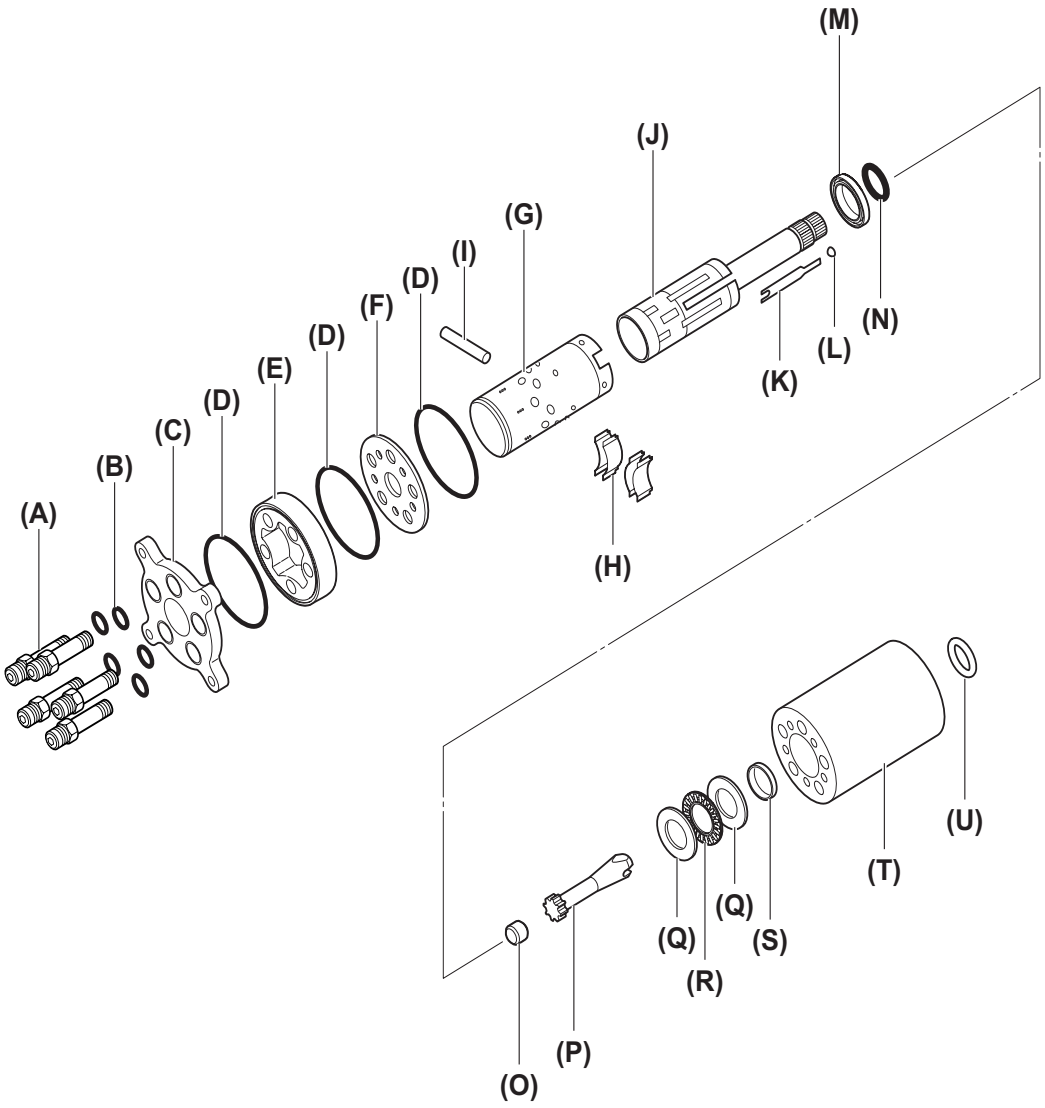

Fig. 2

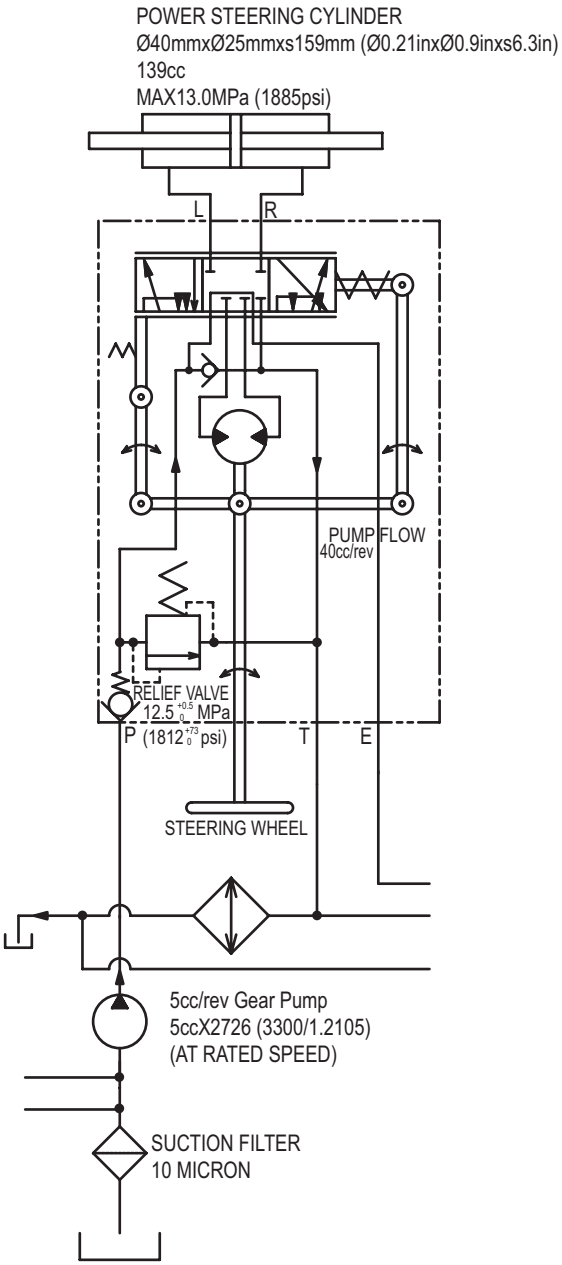

When driving in straight line, the pressurized hydraulic oil is returned from the power steering valve and goes to the transaxle (tank).

When starting a turn, the pressured hydraulic oil goes to the designated hydraulic cylinder port too adjust the angle of the front tires.

When the front tires moves to the steering stop to avoid the higher pressure of the hydraulic oil than the rated pressure, the relief valve in the steering valve works and releases the pressurized hydraulic oil to the transaxle.

At the same time, pressurized hydraulic oil passes through the pilot holes and sensing orifice of the shaft and sleeve in the power steering valve which produces the hydraulic pressure difference. Those hydraulic pressure difference and the spring of the power steering valve produces the power which makes the steering wheel return to the neutral position.

(1) Oil flow in straight line steering configuration

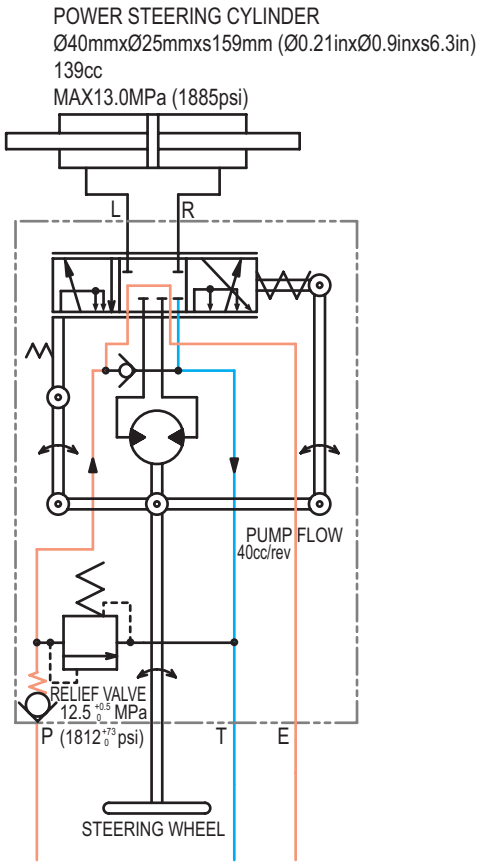

(2) Oil flow in left turn configuration

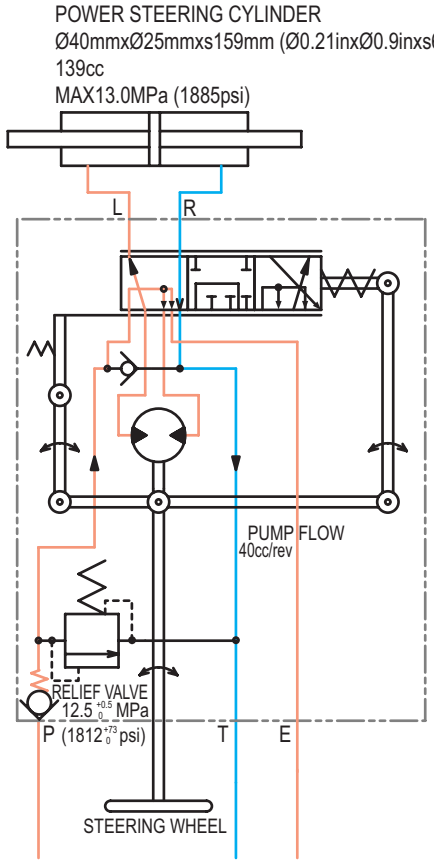

(3) Oil flow in right turn configuration

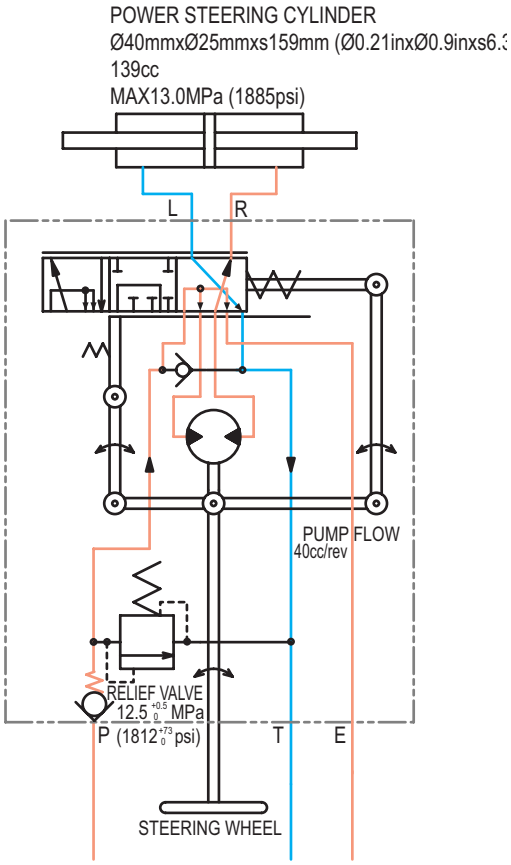

4. Diagnostics

4-1 Steering Diagnostics

After charging the proper O-ring if the same problem is continued please replace the assembly of the steering valve.
Most of malfunction on the steering valve happens due to the dirt, foreign material in the oil and due to the improper oil quality.

(1) Hard steering

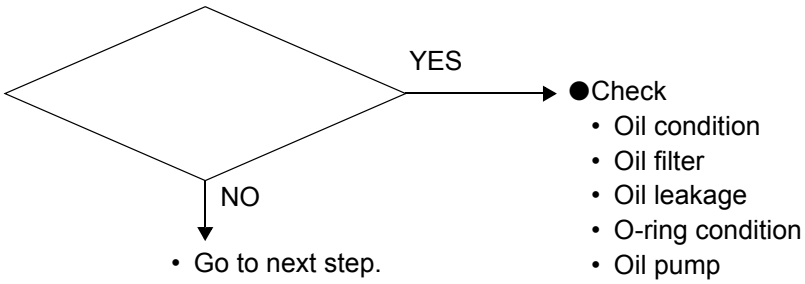

(2) Steering wheel can stop rotating

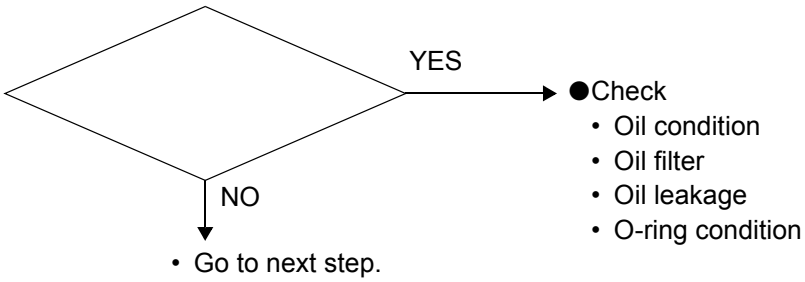

(3) Steering wheel can not be kept in neutral position

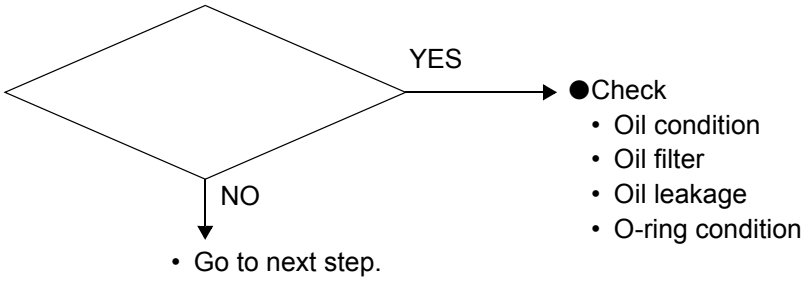

(4) After rotating the steering with some degree or rotate, the steering itself will "Kick-Back"

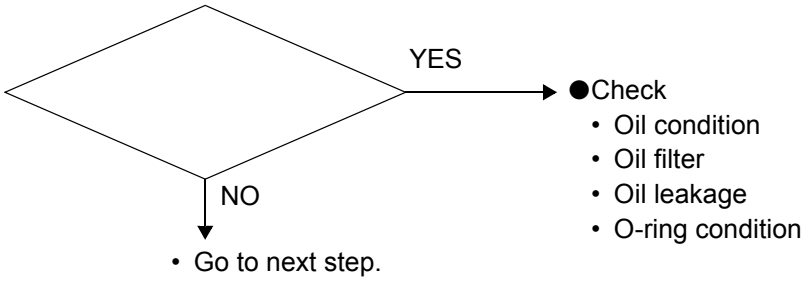

- ●Check
  - Oil condition
  - Oil filter
  - Oil leakage
  - O-ring condition
- Go to next step.

5. Tests and Adjustments

5-1 Steering Tests and Adjustment

5-1-1 Preparation



Fig. 1

(A) Wheel chock

This preparation is necessary for safety precautions.

- Park the Sc2400 on level ground and engage the parking brake securely.
- Chock the rear.
- Start the engine and run at full throttle.
- Raise and lower the implements by the implement control lever, if any.
- Wait for a while until the oil temperature is raised to operating temperature and equalized throughout the entire hydraulic system.
- Run the engine at idling speed.

STOP **IMPORTANT**

Avoid Damage!

- Do not overheat engine.

5-1-2 Power Steering Valve and Steering Hydraulic Cylinder Leakage Test

(1) Object

Check the internal leakage from power steering valve and steering hydraulic cylinder.

(2) Procedure



Fig. 2



Fig. 3

1. Hoist the front wheels and insert stands under the main frame. Lower unit to rest safely on stands.
2. Rotate the steering wheel completely to the right.

⚠ CAUTION

Avoid Injury!

- Be careful of high pressure hydraulic fluid. It may cause serious injury.
- Securely tighten all connections before high pressure is generated.
- Use hard paper or card board in order to search the leaks.
- Protect eyes, skins, hands, and body from high pressure liquid oil.
  If an accident occurs, see a doctor immediately for any medical treatment.

3. If the steering wheel rotates more than four (4) turns, there should be leakage in the system.
   If so, replace the related O-rings, packing and securely tighten all the connections again.
   After replacing the related O-rings, if the steering wheel rotates more than four (4) times, replace the related parts and test it again.

5-1-3 Toe-in Adjustment front wheel

(1) Object

To correct the steering wander and reduce the abnormal tire wearing.

(2) Method

NOTE:

●Toe-in is not adjustable when Sc2400 is off the ground or on uneven surface.

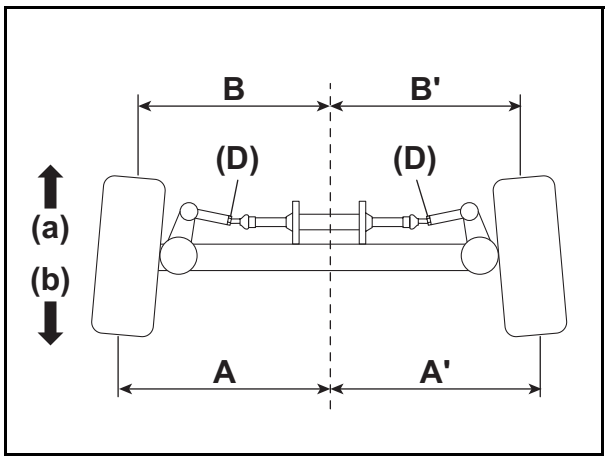

Fig. 4

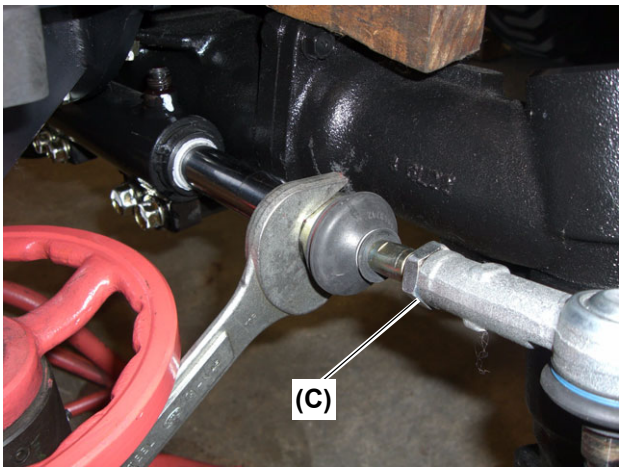

Fig. 5

(C) Locknut (Tightening torque: 44 to 51 ft·lbs (59 to 69 N·m))
(D) Tie-rod
(a) Front
(b) Rear

1. Measure the distance from the center of tire.
2. Check the steering hydraulic cylinder for any leakage and damage.
3. Measure the distance between A and B as well as between A' and B'.
4. If the difference is wider than 0.3 in. (7 mm) and both sides difference is not equal, adjust them with Tie-rod (Fig. 4, (D)).
5. After retightening them securely, reconfirm them the length as well as the both side are equal distance.

8. BRAKES

1. Table of Contents

2. Component Location 8-3
2-1 Brake System Component Location 8-3
2-2 Brake / Differential Linkage (Exploded) 8-4
2-3 Brake Removal and Installation 8-5
3. Theory of Operation 8-6
4. Diagnostics 8-7
4-1 Foot Brake Diagnostics 8-7
4-2 Parking Brake Diagnostics 8-9
5. Tests and Adjustments 8-10
5-1 Brake Link Adjustment 8-10
5-2 Adjusting the brake-differential linkage 8-13

2. Component Location

2-1 Brake System Component Location

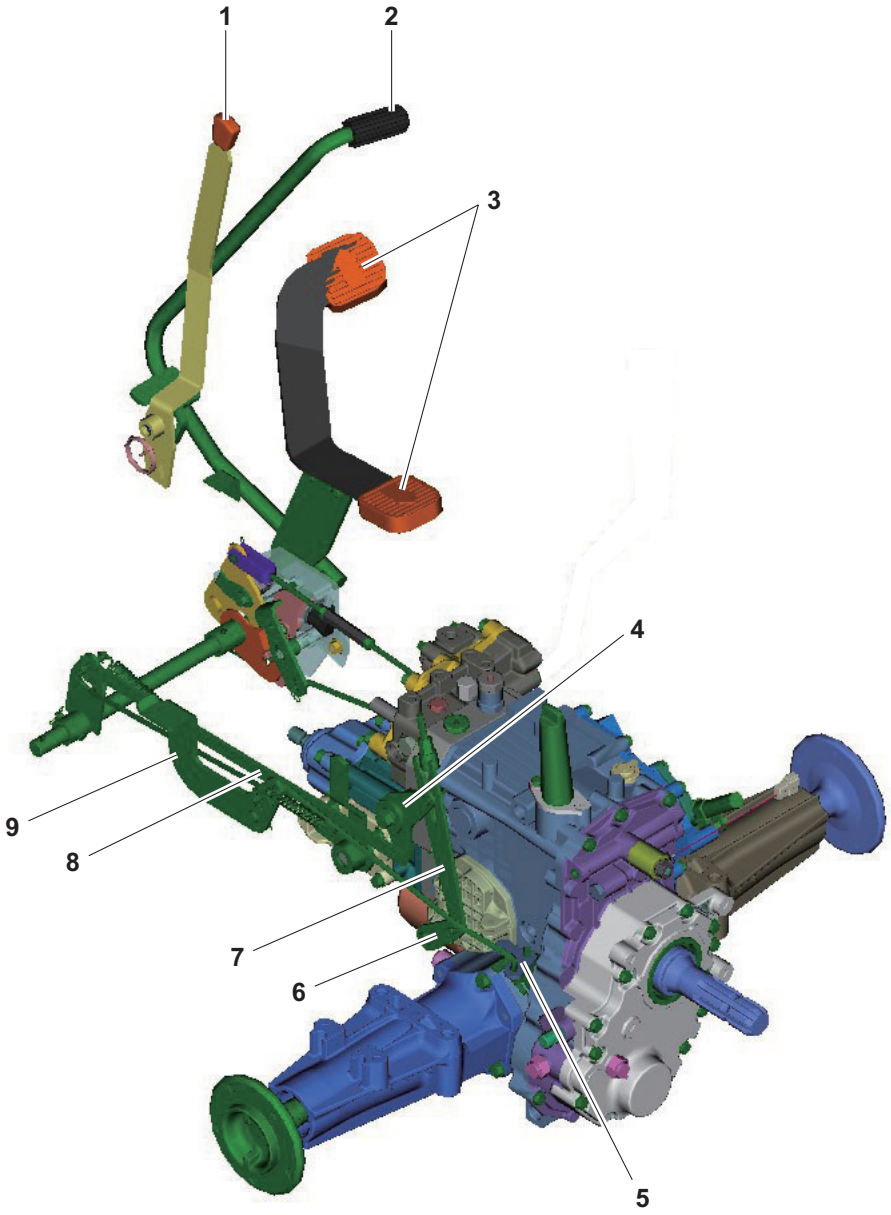

Fig. 1

1. Parking Brake Lever
2. Brake Pedal
3. Forward and Reverse Drive Pedal
4. Arm, Brake Rear
5. Fulcrum Kit, Differential
6. Shaft ASSY., Lever
7. Rod, Push
8. Rod, Brake
9. Pedal, Differential

2-2 Brake / Differential Linkage (Exploded)

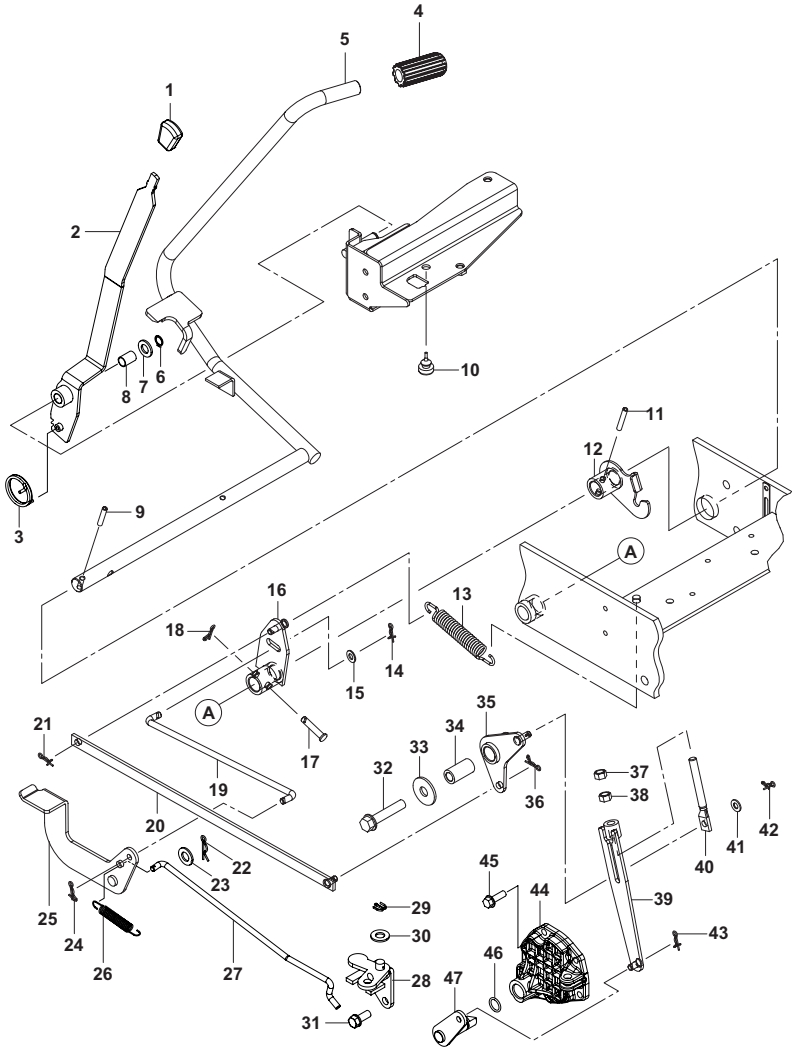

Fig. 2

1. Parking Brake Knob
2. Parking Brake Lever
3. Lock Spring
4. Brake Pedal Head
5. Brake Pedal
6. Ring, 12
7. Washer, 12
8. Bearing, 12 x 20
9. Pin, 6.0A x 32
10. Brake Pedal Stopper
11. Pin, 6.0A x 40
12. Release Arm
13. Brake Return Spring
14. Snap Pin
15. Washer, 8
16. Brake Arm
17. Clevis Pin
18. Snap Pin
19. Differential Link Rod
20. Brake Rod
21. Snap Pin
22. Pin, 14
23. Washer, 14
24. Snap Pin
25. Differential Lock Pedal
26. Differential Lock Return Spring
27. Rear Differential Link Rod
28. Differential Lock Fulcrum
29. Pin, 2.0 x 20
30. Washer, 10
31. Bolt, 8 x 20 (L: 0.8 in.)
32. Bolt, 12 x 60 (L: 2.4 in.)
33. Washer, 12
34. Collar
35. Rear Brake Arm
36. Snap Pin
37. Lock Nut
38. Adjusting Nut
39. Push Rod
40. Adjust Screw
41. Washer, 8
42. Snap Pin
43. Snap Pin
44. Brake Cover
45. Bolt, 8 x 25 (L: 1.0 in.)
46. Packing, P16.0
47. Brake Lever Shaft

2-3 Brake Removal and Installation

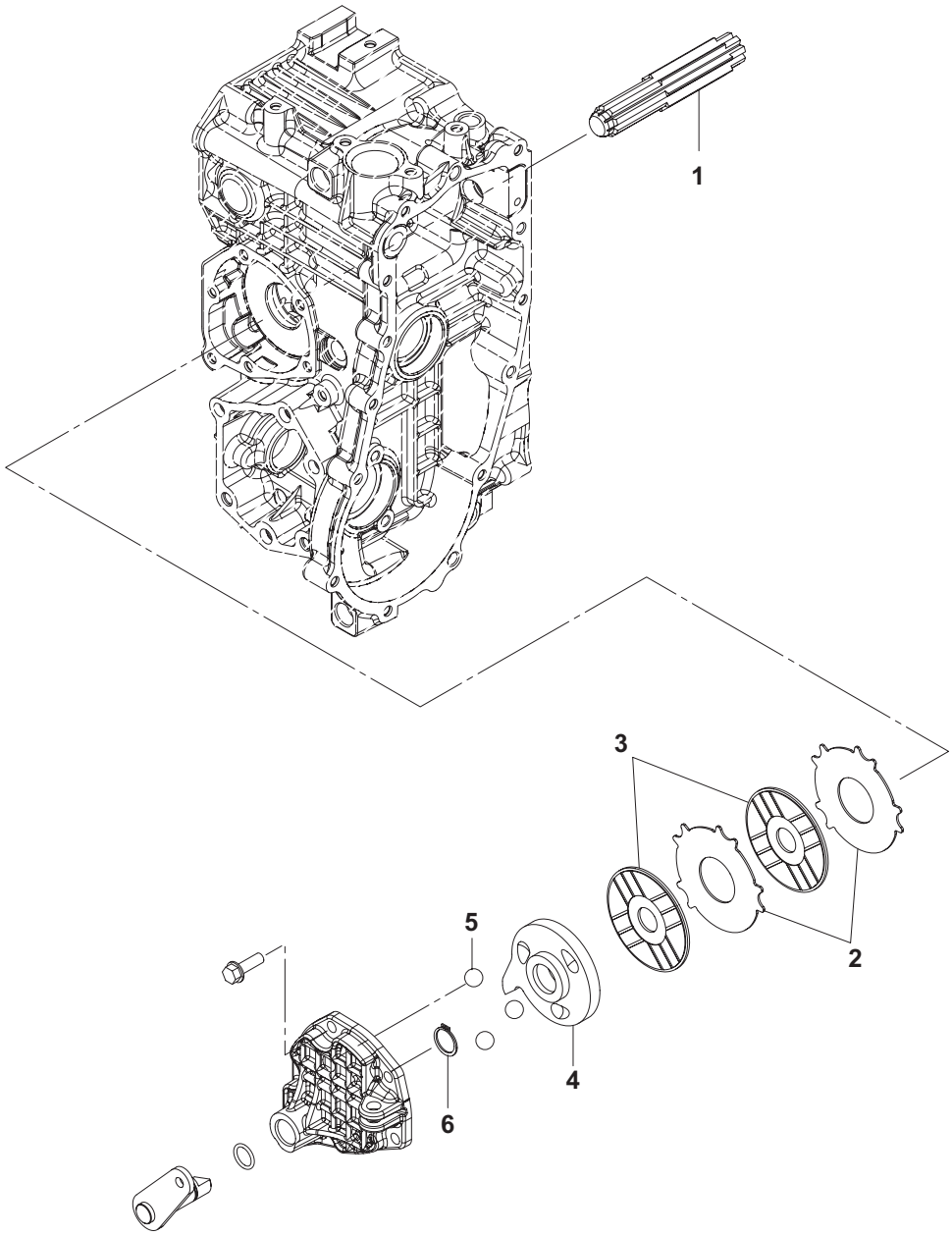

Fig. 3

1. Final Gear
2. Steel Plate
3. Friction Plate
4. Actuator
5. Steel Ball
6. Ring, 20

3. Theory of Operation

NOTE:

●For the names of components, See "Chapter 8. BRAKES, 2-2 Brake / Differential Linkage (Exploded)"

When the brake pedal (Fig. 2, (Ref. #5)) is depressed, the brake arm (Fig. 2, (Ref. #16)] rotates to pull forward the brake rod (Fig. 2, (Ref. #20)) and differential link rod (Fig. 2, (Ref. #19)). Simultaneously, the rear brake arm (Fig. 2, (Ref. #35)) rotates, causing the tip of the rear brake arm (Fig. 2, (Ref. #35)) to push down on the push rod (Fig. 2, (Ref. #39)), thereby rotating the brake lever shaft (Fig. 2, (Ref. #47)). The cam at the end of the brake lever shaft (Fig. 2, (Ref. #47)) rotates in order to rotate the actuator (Fig. 3, (Ref. #4)).

NOTE:

●For the names of components, see "Chapter 8. BRAKES, 2-3 Brake Removal and Installation".

The rotation of the actuator (Fig. 3, (Ref. #4)) pushes the steel balls (Fig. 3, (Ref. #5)) located in the dent in the actuator (Fig. 3, (Ref. #4)) into the shallow portion of the dent, causing the friction plate (Fig. 3, (Ref. #3)) and steel plate (Fig. 3, (Ref. #2)) to press against each other. The spline inside the friction plate (Fig. 3, (Ref. #3)) engages with the final gear (Fig. 3, (Ref. #1)). Normally, the friction plate (Fig. 3, (Ref. #3)) rotates freely; however, the pressure of the friction plate (Fig. 3, (Ref. #3)) against the steel plate (Fig. 3, (Ref. #2)) generates a friction force that acts as a braking force on the final gear (Fig. 3, (Ref. #1)).

NOTE:

●For the names of components, see "Chapter 8. BRAKES, 2-2 Brake / Differential Linkage (Exploded)".

At the same time, pushing the differential link rod (Fig. 2, (Ref. #19)) forward rotates the differential lock pedal (Fig. 2, (Ref. #25)), which pulls the rear differential link rod (Fig. 2, (Ref. #27)) forward. The differential lock fulcrum (Fig. 2, (Ref. #28)) rotates, causing the differential lock fork to be under pressure. This engages the differential lock in order to apply braking force to both axles uniformly.

When the brake pedal is released (Fig. 2, (Ref. #5)), the tension of the brake return spring (Fig. 2, (Ref. #13)) causes the brake arm (Fig. 2, (Ref. #16)) to rotate, returning the brake pedal to its original position. In addition, the brake lever shaft (Fig. 2, (Ref. #47)) rotates and the brake plate kit, which had been under pressure, is released, eliminating the friction force.

Locking the brake pedal (Fig. 2, (Ref. #5)) when the brake pedal is depressed also serves as a parking brake. When the brake pedal (Fig. 2, (Ref. #5)) is fully depressed with the parking brake lever (Fig. 2, (Ref. #2)) pulled forward, the hook of the brake pedal is engaged in the latch on the parking brake lever (Fig. 2, (Ref. #2)).

4. Diagnostics

4-1 Foot Brake Diagnostics

(1) Difficult stop

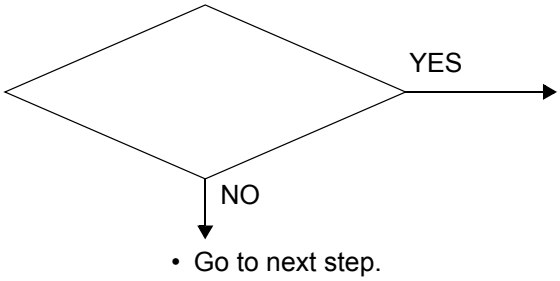

●Check
- Brake pedal, rod: Binding / worn out
- Brake spring: Lost, broken, worn out, damaged, fatigue break down
- Mud or debris
- Brake free play: Inadequate
- Brake linkage rod: Bent, worn out
- Differential lock device: Malfunction
- Brake plate, friction plate, pressure plate: Worn out, damaged

(2) Brakes function too excessively

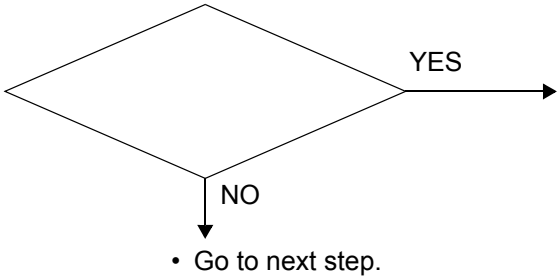

●Check
- Brake rod linkage free play adjustment: Incorrect
- Brake rod linkage: Malfunction, binding
- Brake plate, friction plate, pressure plate: Surface damaged
- Balls in brake chamber: Worn out
- Differential lock: Malfunction
- Transmission oil condition

(3) Brakes can not be released

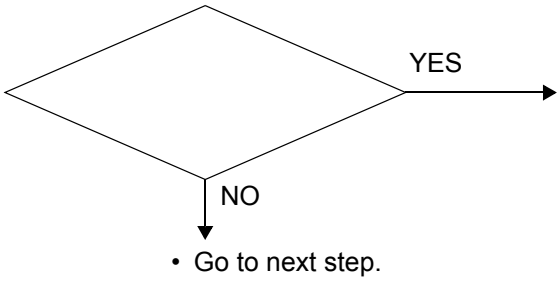

●Check
- Brake rod linkage adjustment: Incorrect, malfunction, agglutinated
- Brake return spring: Broken, over extended
- Park brake rod linkage: Malfunction, binding

(4) Abnormal noise from brake chamber

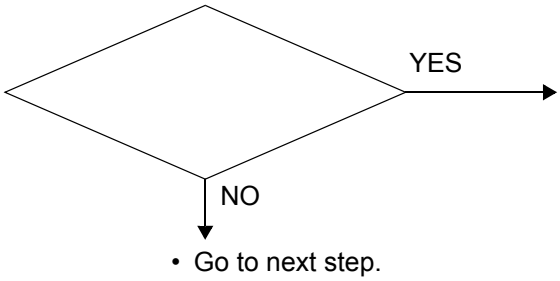

- Go to next step.

●Check
- Brake plate, friction plate, pressure plate: Damaged
- Transmission oil condition: Dirty, contamination
- Brake rod linkage: Malfunction, binding
- Transaxle gears: Malfunction, binding
- Balls in brake chamber: Worn out
- Differential lock device: Malfunction

(5) Brake wearing too fast

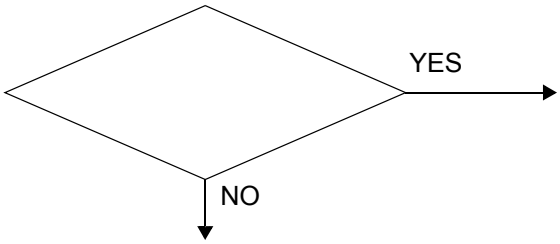

- Go to next step.

●Check
- Transmission oil condition: Dirty, contamination
- Brake pedal return spring: Malfunction, binding
- Brake rod linkage: Malfunction, binding

4-2 Parking Brake Diagnostics

(1) Parking brake can not be engaged

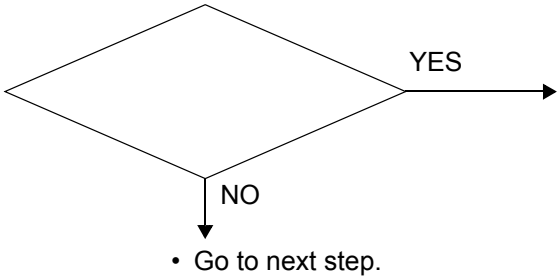

- Go to next step.

●Check
- Parking brake rod linkage: Malfunction, binding
- Brake plate, friction plate, pressure plate: Worn out, damaged
- Balls in brake chamber: Worn out

(2) Parking brake can not be released

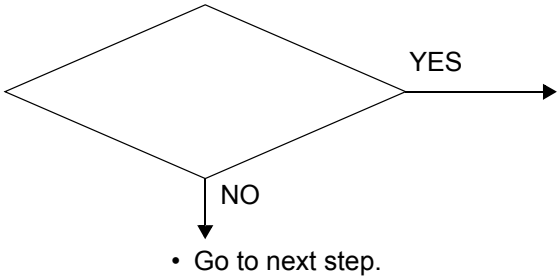

- Go to next step.

●Check
- Parking brake rod linkage: Malfunction, binding
- Brake return spring: Malfunction, binding
- Parking brake rod linkage: Misadjustment
- Brake plate, friction plate, pressure plate: Damaged
- Transmission oil condition: Dirty, contamination

5. Tests and Adjustments

5-1 Brake Link Adjustment

1. With the Brake Pedal at rest /disengaged, tighten the M10 Nut on the Adjusting Screw by hand, until all the play is eliminated (Fig. 2). (See page 8-11)
2. Unscrew the above M10 nut three (3) turns (i.e., 0.2 in. (4.5 mm)) and lock it in place with the Jam Nut (Fig. 2). (See page 8-11)
3. When performing maintenance work, set the clearance between the Nut and Rod Collar to 0.18 in. (4.5 mm) by raising the adjusting screw (Fig. 2). (See page 8-11)

NOTE:

●Tightening torque of bolts and nuts are according to the chart below unless otherwise specified.

Bolt Diameter	ft·lbs	N·m	kg·m
6 mm	6 to 9	8 to 12	0.8 to 1.2
8 mm	17 to 22	23 to 29	2.3 to 3.0
10 mm	33 to 43	44 to 59	4.5 to 6.0
12 mm	58 to 72	78 to 98	8.0 to 10.0
14 mm	87 to 109	118 to 147	12.0 to 15.0
16 mm	123 to 152	167 to 206	17.0 to 21.0
18 mm	174 to 210	235 to 284	24.0 to 29.0
20 mm	239 to 297	324 to 402	33.0 to 41.0

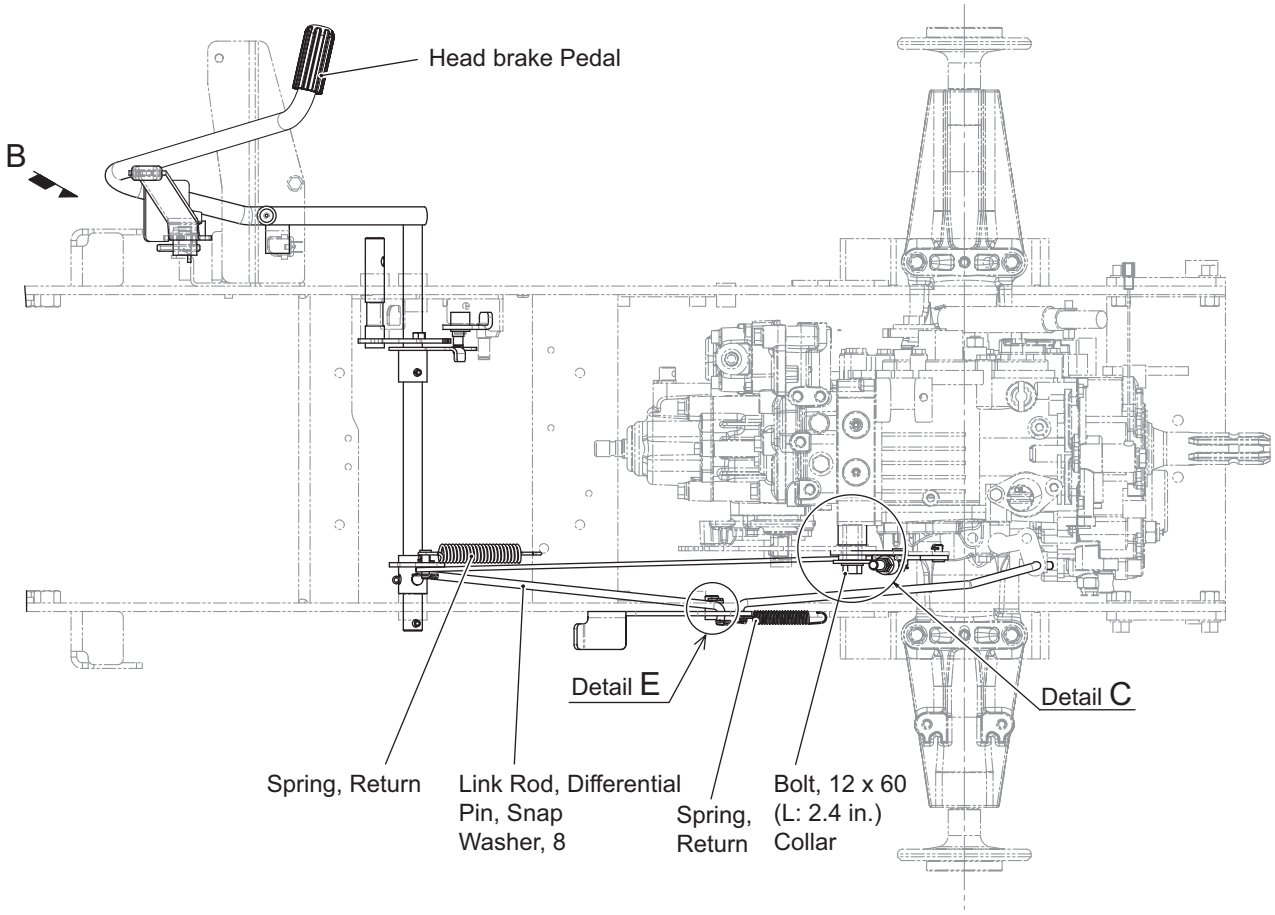
Head brake Pedal
B
Detail E
Detail C
Spring, Return
Link Rod, Differential
Pin, Snap
Washer, 8
Spring,
Return
Bolt, 12 x 60
(L: 2.4 in.)
Collar

Fig. 1

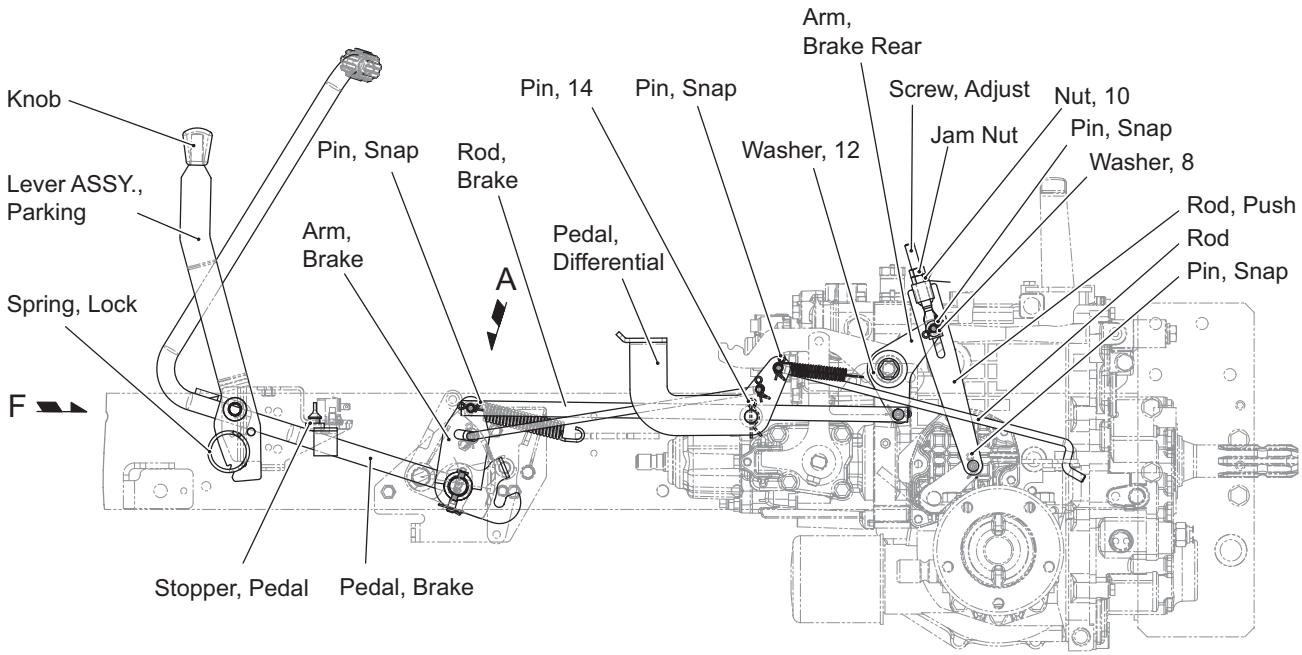
Knob
Lever ASSY.,
Parking
Spring, Lock
F
Pin, Snap
Rod,
Brake
Arm,
Brake
A
Pin, 14
Pin, Snap
Pedal,
Differential
Arm,
Brake Rear
Screw, Adjust
Nut, 10
Jam Nut
Pin, Snap
Washer, 12
Washer, 8
Rod, Push
Rod
Pin, Snap
Stopper, Pedal
Pedal, Brake

Fig. 2

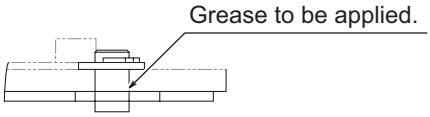

Fig. 3 Detail E

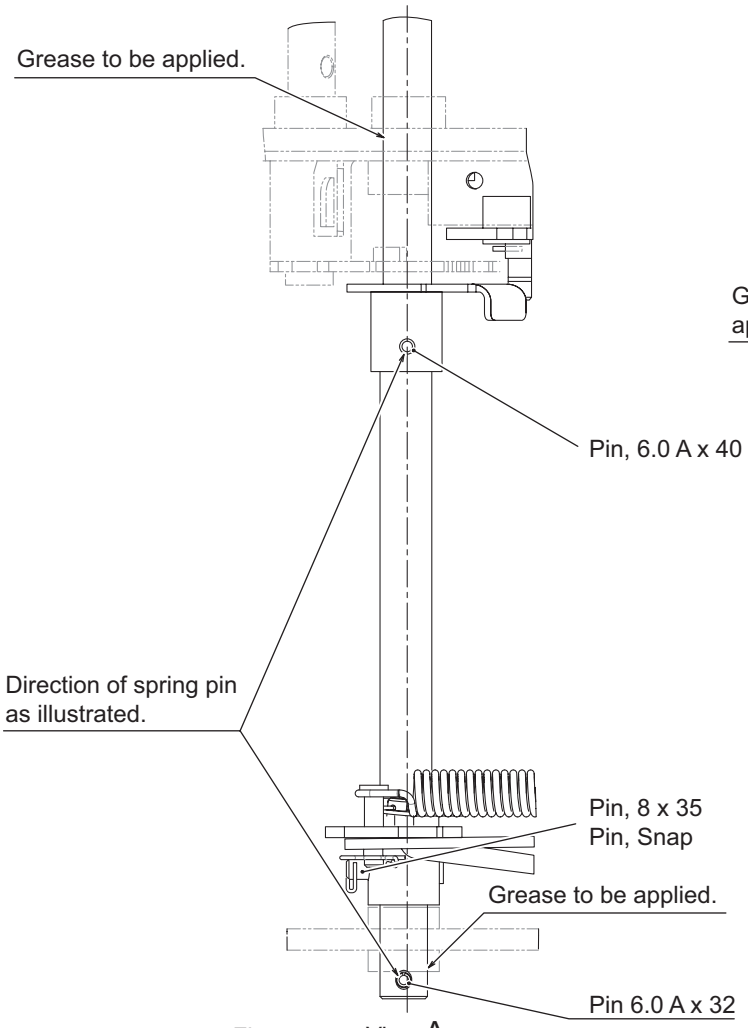

Fig. 5 View A

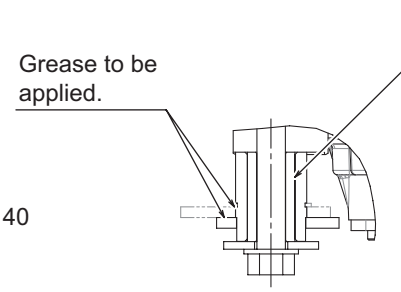

Fig. 4 Detail C

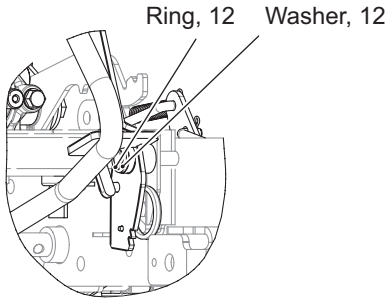

Fig. 6 View B

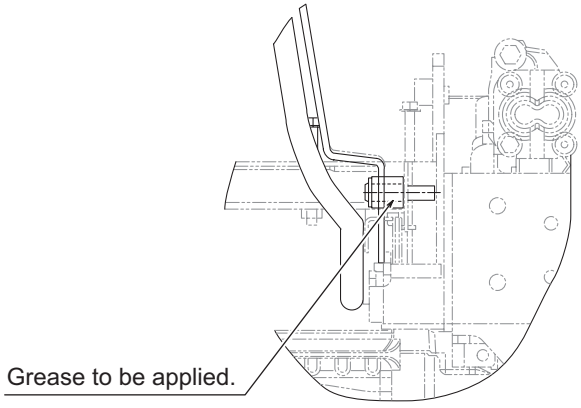

Fig. 7 View F

5-2 Adjusting the brake-differential linkage

Reason:
Perform this adjustment in order to ensure proper braking and engagement of the differential lock when the brake pedal is depressed, and thus prevent the tractor from creeping when parked on a slope (no more than 15 degrees), and ensure that the brakes completely stop the tractor on an incline.

Required items:

Spring scale	

Procedure:
1. Take your foot off the brake pedal.

IMPORTANT

●To prevent damage, do not pre-load the brakes, as it will result in excessive wear to the brake components.

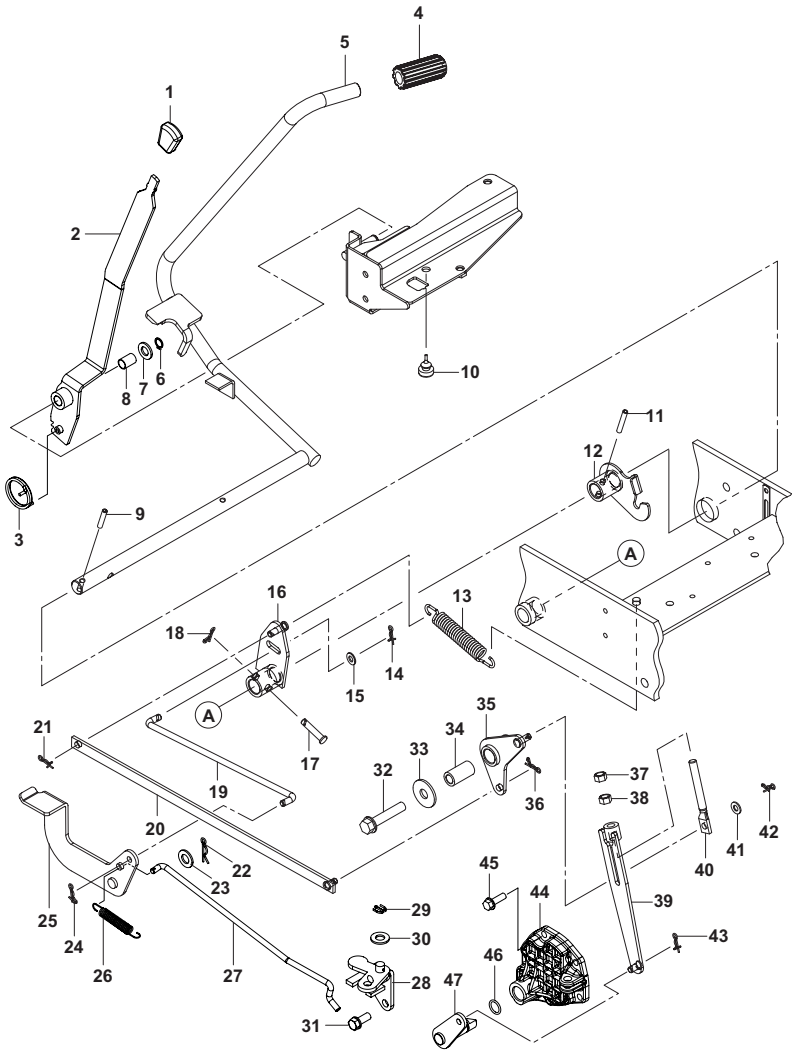

Fig. 1

1. Parking Brake Knob
2. Parking Brake Lever
3. Lock Spring
4. Brake Pedal Head
5. Brake Pedal
6. Ring, 12
7. Washer, 12
8. Bearing, 12 x 20
9. Pin, 6.0A x 32
10. Brake Pedal Stopper
11. Pin, 6.0A x 40
12. Release Arm
13. Brake Return Spring
14. Snap Pin
15. Washer, 8
16. Brake Arm
17. Clevis Pin
18. Snap Pin
19. Differential Link Rod
20. Brake Rod
21. Snap Pin
22. Pin, 14
23. Washer, 14
24. Snap Pin
25. Differential Lock Pedal
26. Differential Lock Return Spring
27. Rear Differential Link Rod
28. Differential Lock Fulcrum
29. Pin, 2.0 x 20
30. Washer, 10
31. Bolt, 8 x 20 (L: 0.8 in.)
32. Bolt, 12 x 60 (L: 2.4 in.)
33. Washer, 12
34. Collar
35. Rear Brake Arm
36. Snap Pin
37. Lock Nut
38. Adjusting Nut
39. Push Rod
40. Adjust Screw
41. Washer, 8
42. Snap Pin
43. Snap Pin
44. Brake Cover
45. Bolt, 8 x 25 (L: 1.0 in.)
46. Packing, P16.0
47. Brake Lever Shaft

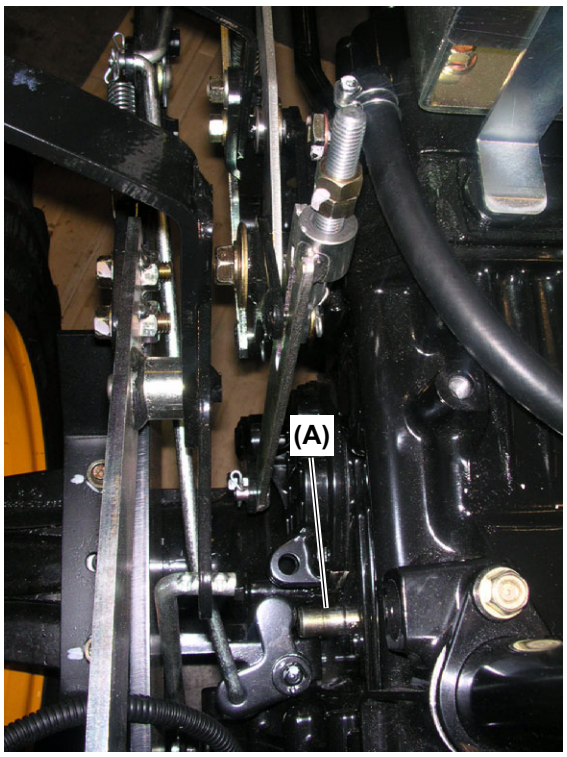

Fig. 2

(A) Differential lock shaft

2. Pull the cotter pin out of the end of the brake rod (Fig. 1, (Ref. #20)) and remove the rod from the brake arm (Fig. 1, (Ref. #16)). (See page 8-14)
   * This is accomplished easiest from underneath the left side of tractor.
3. Remove the forward end of the link rod (adjust screw) (Fig. 1, (Ref. #40)) from rear brake arm (Fig. 1, (Ref. #35)). (See page 8-14)
4. Connect the spring scale to the bottom of brake arm (Fig. 1, (Ref. #16)) (See page 8-14) and pull forward with 45 N (10 lb. of force).
5. Push the rear differential link rod (Fig. 1, (27)) to the rear until the differential lock fulcrum (Fig. 1, (Ref. #28)) (See page 8-14), comes in contact with the differential lock shaft (Fig. 2, (A)) (See page 8-15).
6. Check the alignment of the rear differential link rod (Fig. 1, (Ref. #27)) and the brake arm (Fig. 1, (Ref. #16)). (See page 8-14)

NOTE:

- You may need to move the link rod (Fig. 1, (Ref. #20)) into the rear brake arm (Fig. 1, (Ref. #35)) (as shown in the illustration), if the linkage cannot be adjusted sufficiently to ensure that the brake arm functions properly. (See page 8-14)

7. Adjust the link rod (adjust screw) (Fig. 1, (Ref. #40)) by turning it, one full turn at a time, inward or outward (the link has left hand threads), and up to a maximum of six (6) turns.
8. Adjust the brake rod (Fig. 1, (Ref. #20)) (See page 8-14) so that there is no free play in the brake linkage when the brake pedal is released.
   * Check the linkage after adjustment for binding. Make sure that the differential lock does not engage and that the brakes do not drag when the rear wheels are rotated. If the brakes drag when the wheels are rotated, the linkage is too tight.
9. Loosen the cap screw.

10. Depress the brake pedal and engage the parking brake lock.

NOTE:

- DO NOT allow the actuator to come in contact with the switch body.

11. Hold the actuator in position and use 12 N•m (108 lb•in.) of torque to tighten the cap screw.
12. Retest the tractor on slope (no more than 15 degrees), with the parking brake engaged.
13. If the tractor still creeps when parked on a slope (no more than 15 degrees), repeat the procedure steps until it stops.

Results:

- If the adjustment to the brake-differential linkage is correct:
  - There should be 0.2 in. (4.5 mm) free play in the brake linkage when the brake pedal is released and the differential lock should not engage.
  - The differential lock will engage only when the brakes are engaged.

NOTE:

- If the brake rod (Fig. 1, (Ref. #3)) cannot be adjusted so that it pivots, you may need to move the brake arm rod (Fig. 1, (Ref. #6)) to rear hole (Fig. 1, (Ref. #12)). (See page 8-14)
- Brake switch position cannot be adjusted.

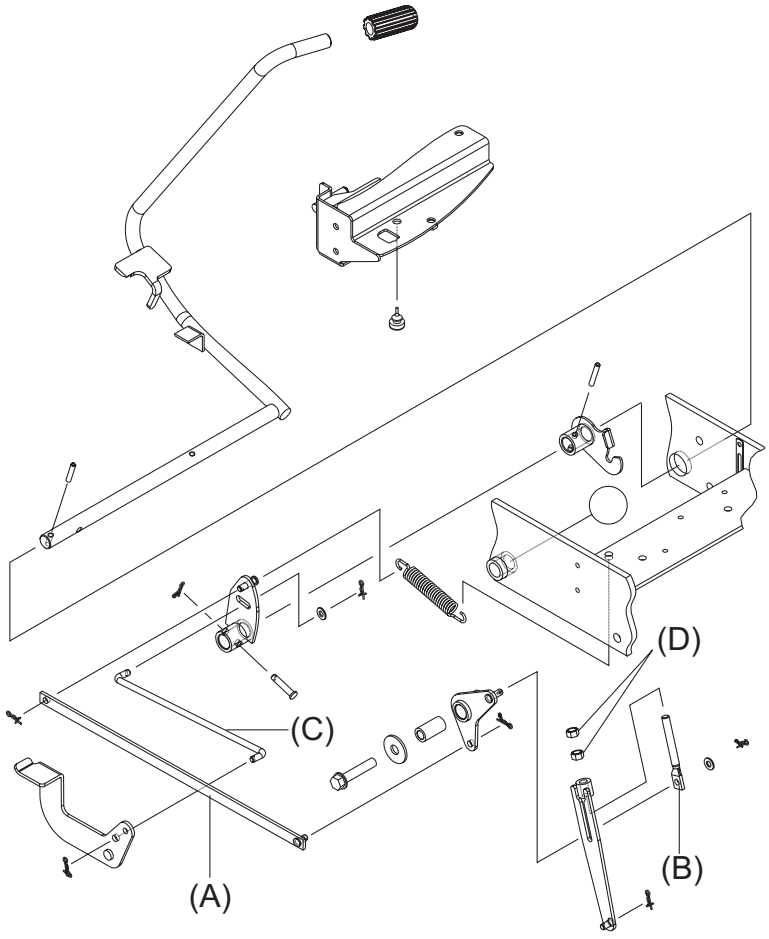

Fig. 3

(A) Bake rod
(B) Adjust screw
(C) Link rod, differential
(D) Nut, 10

- Engage the parking brake and check if the tractor still creeps when parked on a slope (no more than 15 degrees).
- If the brakes do not hold, either the linkage is contacting the differential lock and thus preventing the brake from engaging fully, or the brakes need servicing.

9. MISCELLANEOUS

1. Table of Contents

2. Component Location 9-3
2-1 Foot Control Linkage 9-3
3. Tests and Adjustments 9-4
3-1 Procedure for Installing and Adjusting Hood Assembly 9-4
4. Accelerator / Throttle Adjustment 9-6

2. Component Location

2-1 Foot Control Linkage

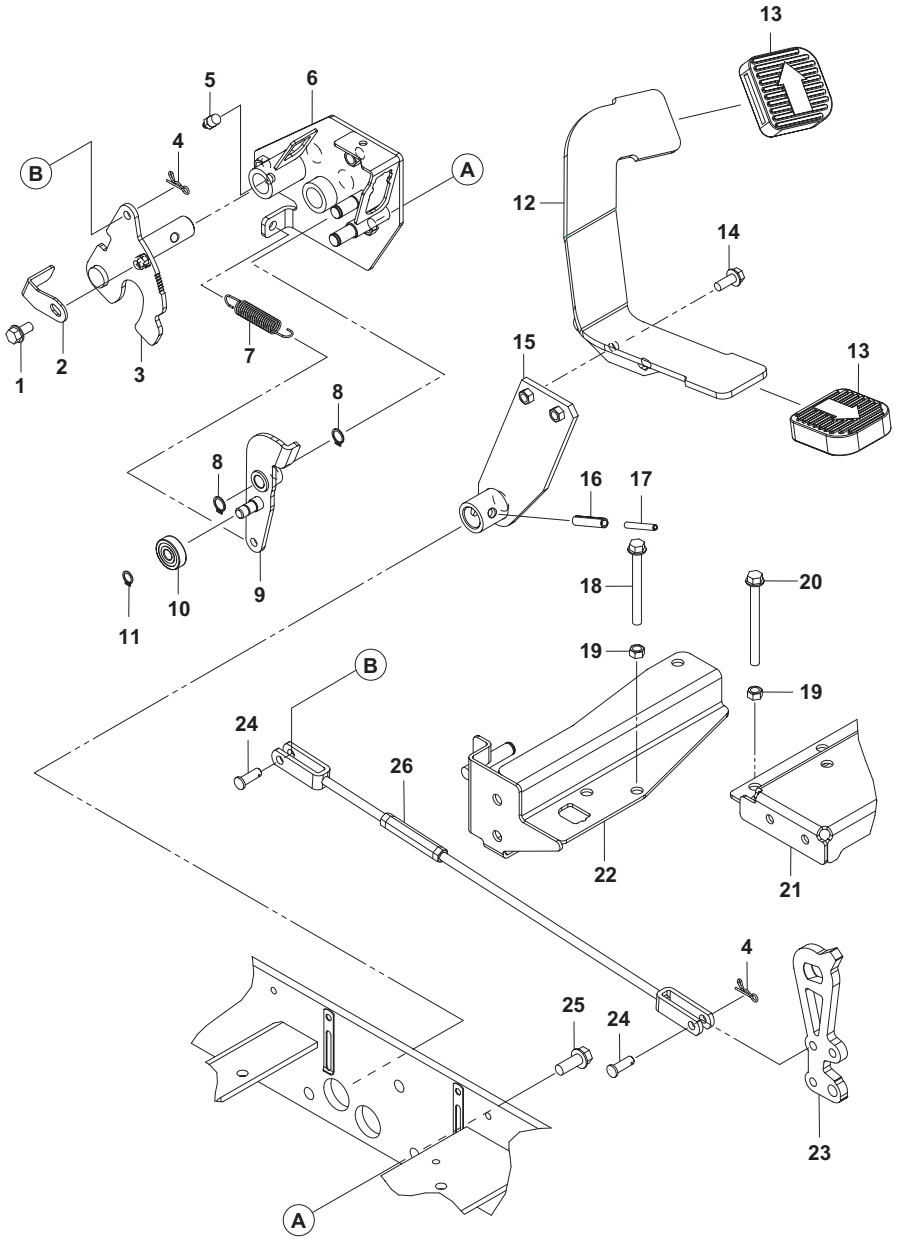

1. Bolt, 8 x 16 (L: 0.64 in.)
2. Arm, Switch
3. Arm, HST
4. Pin, Snap
5. Fitting, PT 1 / 8
6. Fulcrum, Pedal
7. Spring, Return
8. Ring, 12
9. Arm, Switch
10. Bearing, 6200UU
11. Ring, 10
12. Pedal, HST
13. Head, Pedal
14. Bolt, 8 x 20 (L: 0.8 in.)
15. Pedal, Arm
16. Pin, 8.0 A x 40
17. Pin, 5.0 A x 40
18. Bolt, 8 x 80 (L: 3.2 in.)
19. Nut, 8
20. Bolt, 8 x 90 (L: 3.6 in.)
21. Stay RR, Step
22. Stay RF, Step
23. Arm, Control
24. Pin, 8 x 20
25. Bolt, 10 x 25 (L: 1 in.)
26. Rod ASSY., HST

3. Tests and Adjustments

3-1 Procedure for Installing and Adjusting Hood Assembly

1. After installing the hood assembly, install the gas spring and hood hinge. Temporarily tighten the four (4) M8 x 16 (L: 0.64 in.) collar head screw, two (2) per side.
2. Adjust the hood, back and forth to set the clearance between the Hood and Dash Cover to 0.2 - 0.44 in. (5 - 11 mm) of *-marked dimension when closing hood (see Fig. 2). Then turn hood latch knob to close hood.
3. Once the proper clearance is achieved. Torque the four (4) M8 x 16 (L: 0.64 in.) collar head screws to the specified torque (see Fig. 1).

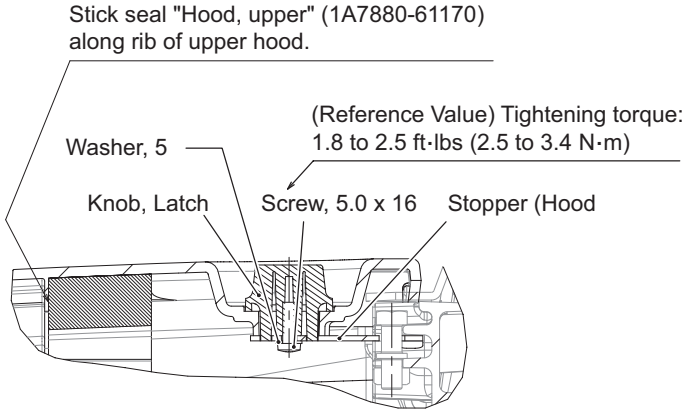

Fig.1 Detail A Area (SEC. B-B)

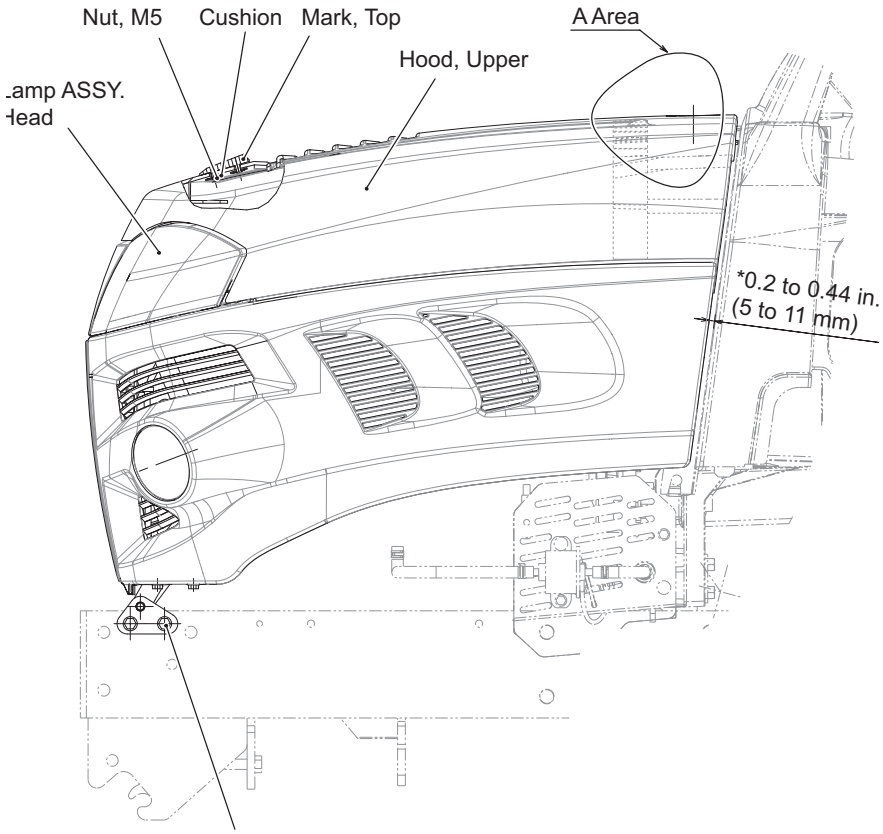

Fig. 2 Bolt, 8 x 16 (L: 0.64 in.)
Washer, 8

■ Side Lamps

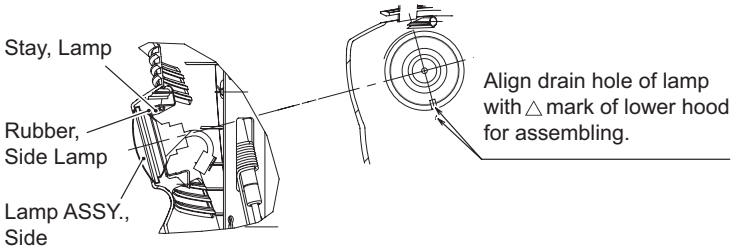

Fig. 3 Cross-sectional view of side lamp section

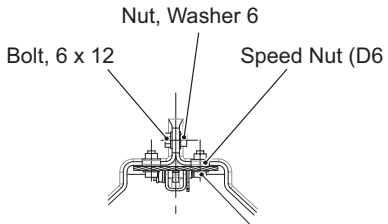

Fig. 4 SEC. D-D

■ Hood Assembly

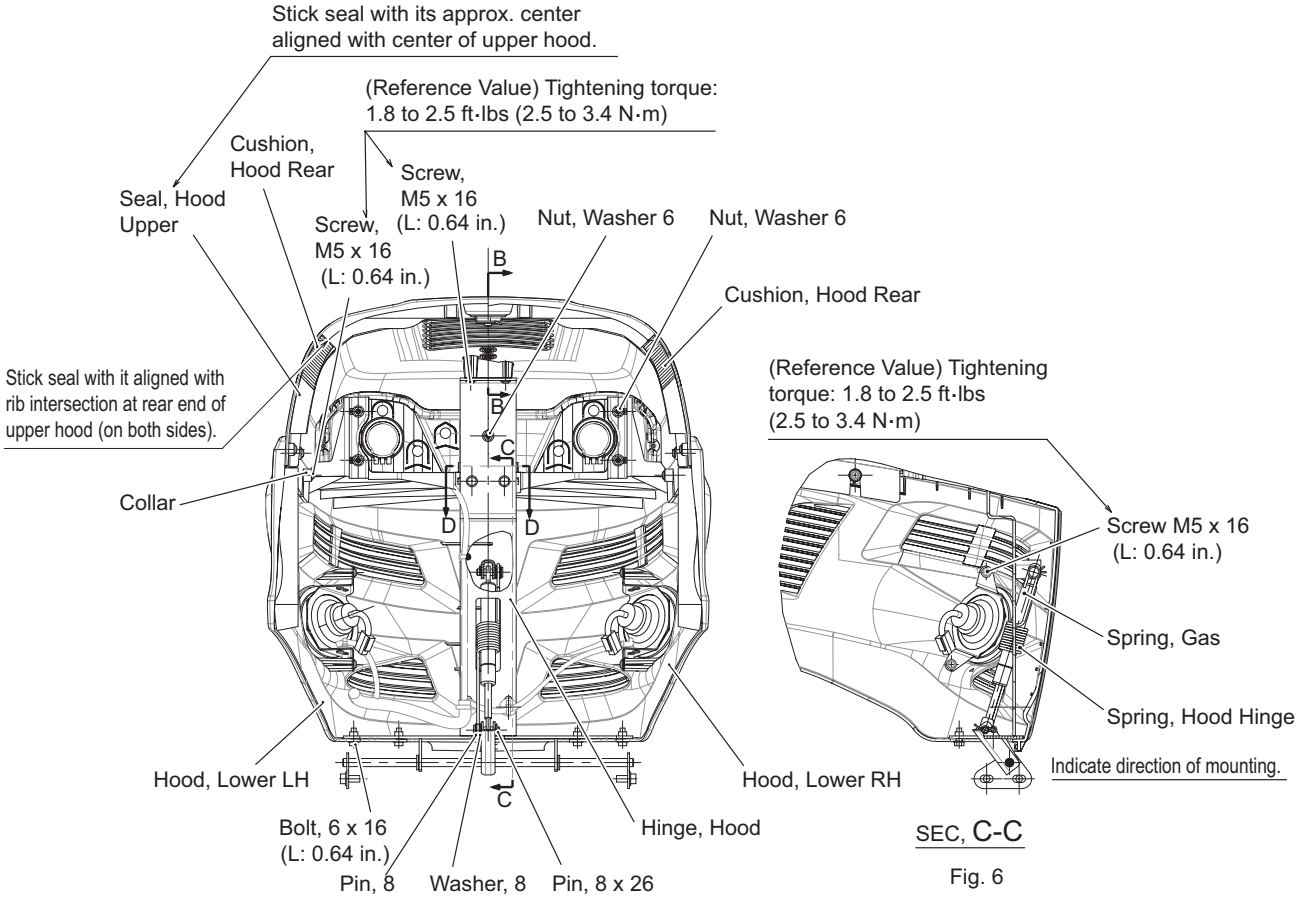

Fig. 5

SEC, C-C

Fig. 6

4. Accelerator / Throttle Adjustment

NOTE:

- Remove dash panel to adjust the accelerator / throttle wire so that the engine runs at its max. speed of approximately 3,400 rpm with the accelerator / throttle fully opened.
- Accelerator / throttle lever should be operated with a force of 8.8 ± 2.2 lbs (39.2 ± 9.8 N), measured with a spring scale. Measured at the handle end of the throttle lever.
- Tightening torque of bolts and nuts are according to chart below unless otherwise specified.

Bolt Diameter	ft·lbs	N·m	kg·m
6 mm	6 to 9	8 to 12	0.8 to 1.2
8 mm	17 to 22	23 to 29	2.3 to 3.0
10 mm	33 to 43	44 to 59	4.5 to 6.0
12 mm	58 to 72	78 to 98	8.0 to 10.0
14 mm	87 to 109	118 to 147	12.0 to 15.0
16 mm	123 to 152	167 to 206	17.0 to 21.0
18 mm	174 to 210	235 to 284	24.0 to 29.0
20 mm	239 to 297	324 to 402	33.0 to 41.0

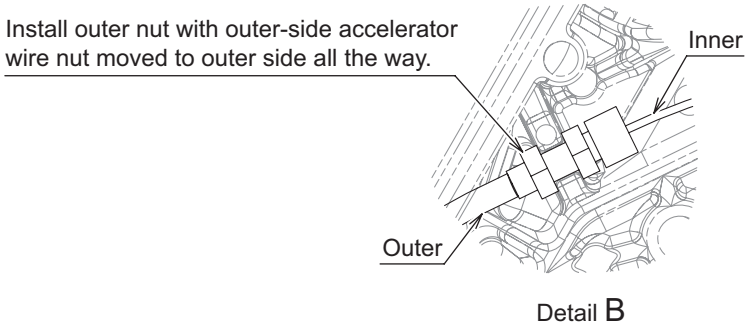

Fig. 1

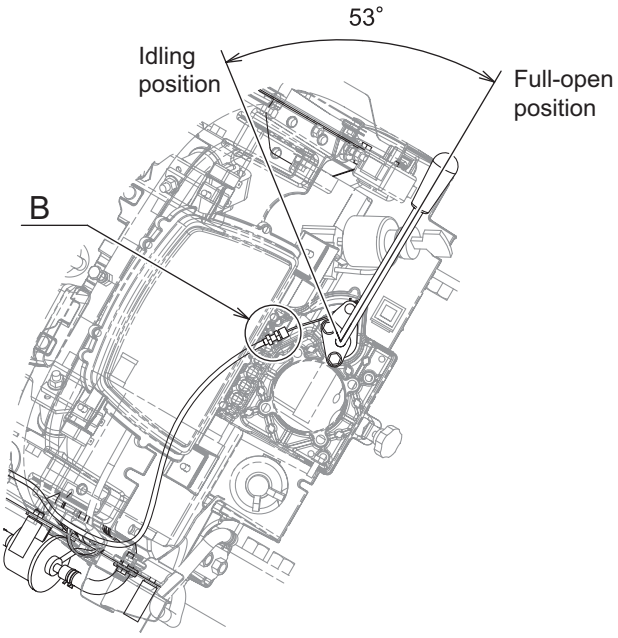

Fig. 2

■ Throttle Cable

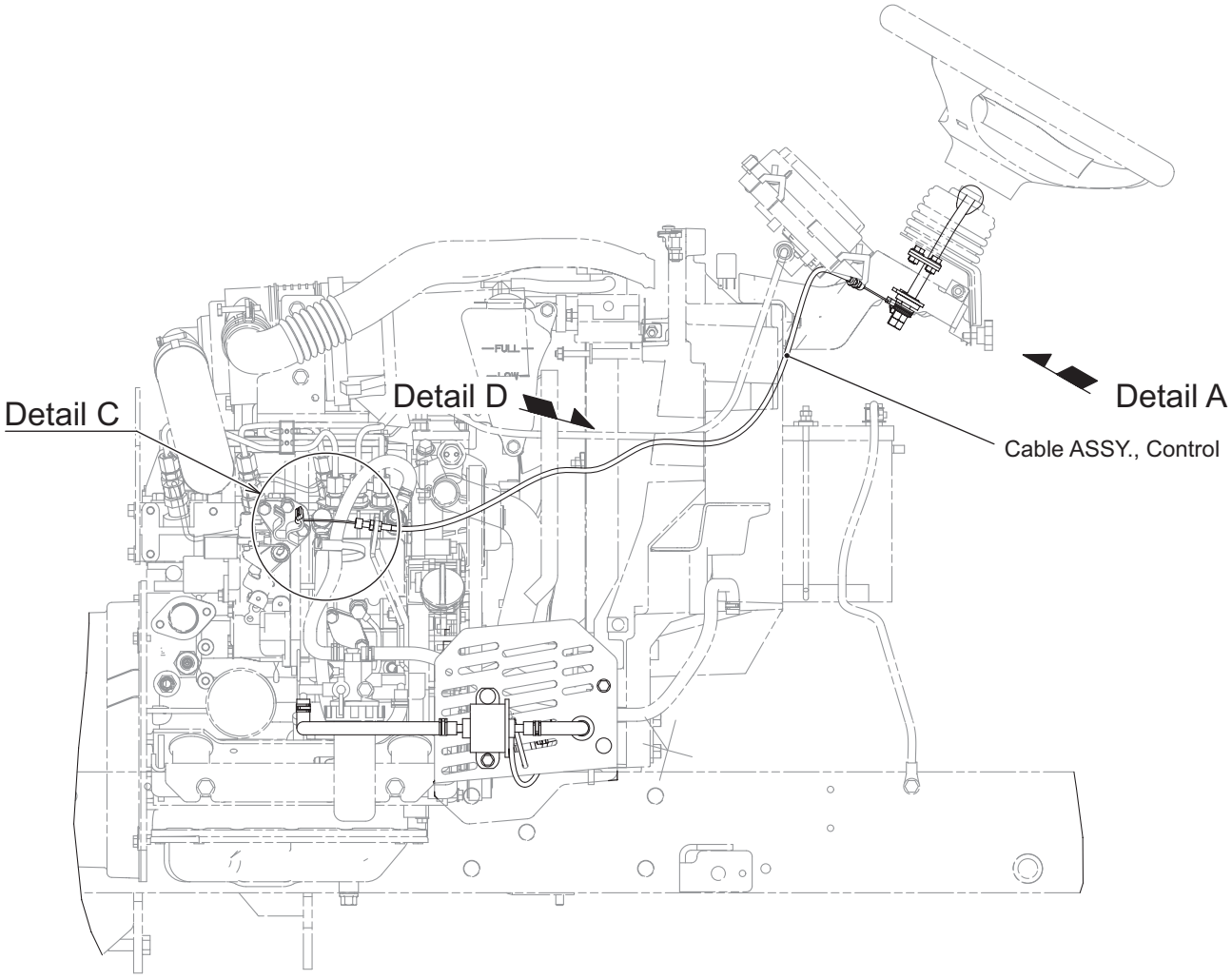

Fig. 3

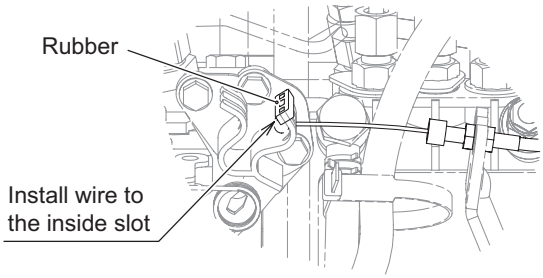

Fig. 4 Detail C

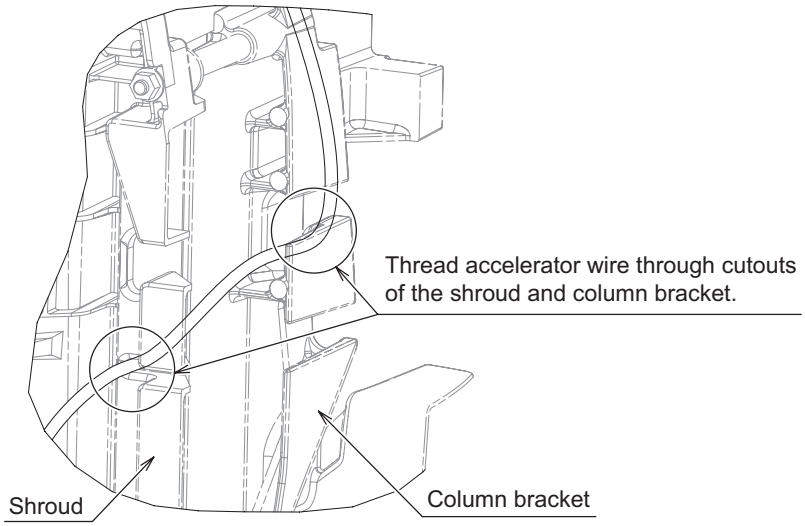

Fig. 5 Detail D

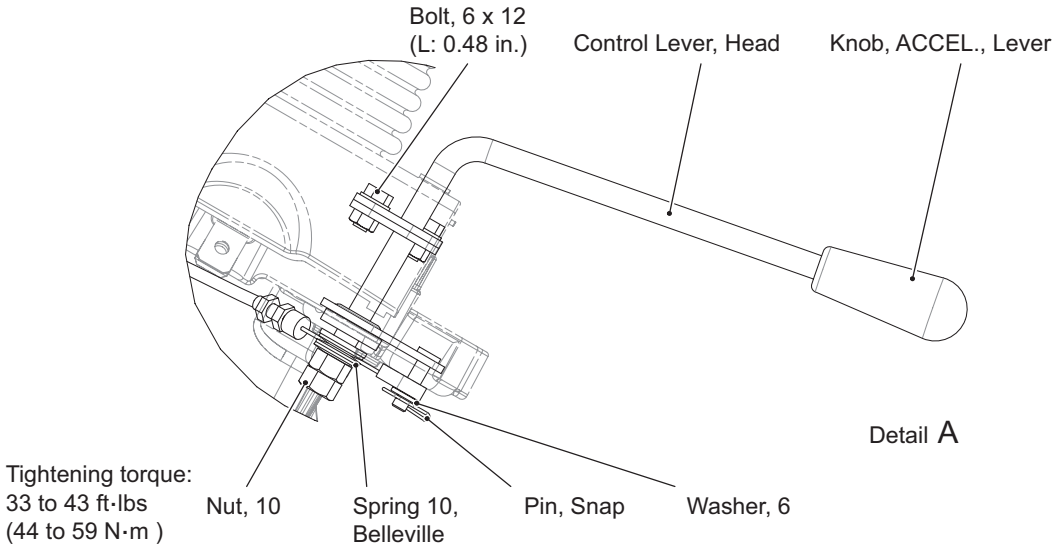

Fig. 6

10. REPAIR

1.Table of Contents

1.Table of Contents 10-2
2.Preparation 10-4
3.3-Point Hitch Separation 10-8
4.Hood 10-20
5.Turn Signal / Hazard Light Removal 10-29
6.Roll-Over Protective Structure (ROPS) Upper 10-33
7.Safety belt / Seat 10-36
8.Seat Stay 10-39
9.Hydro Static Transmission (HST) Pedal 10-43
10.Footrest 10-46
11.Fender Disassembly 10-51
12.Front Tire 10-57
13.Rear Tire 10-64
14.Power Steering (PST) Cylinder 10-72
15.Front Drive Shaft 10-83
16.Front Axle 10-95
17.Steering Wheel 10-103
18.Battery 10-107
19.Hour Meter Cable 10-110
20.Front Grip 10-115
21.Dashboard Upper 10-117
22.Dashboard Upper Switch 10-127
23.Instrument Panel 10-133
24.Dashboard Bottom Cover 10-136
25.Air Cleaner 10-138
26.Exhaust Pipe & Muffler 10-141
27.Engine Control Cable 10-146
28.Engine Control Lever 10-150
29.Engine 10-155
30.Engine Mount 10-172
31.Coolant Tank 10-174
32.Fuel Filter and Fuel Feed Pump 10-176
33.Radiator 10-181
34.Power Steering Valve 10-188
35.Steering Bracket 10-197
36.Oil Cooler 10-199
37.Hydraulic Pipes 10-203
38.Main Drive Shaft 10-215
39.Column Bracket 10-221
40.Fuel Tank 10-227

41.Fuel Sensor 10-235
42.Power Take Off (PTO) Safety Cover 10-238
43.Removing the Lift Cylinder 10-240
44.Disassembling the Lift Cylinder 10-246
45.Removing the Implement Control Valve Quick Coupler 10-258
46.Removing the Implement Control Valve Assembly 10-263
47.Disassembling the Implement Control Valve Assembly 10-271
48.Removing the Control Valve 10-281
49.Disassembling the Control Valve 10-290
50.Removing the Rear Frame 10-311
51.Foot Brake Pedal Disassembly 10-322
52.Tips: Reassembly Procedure 10-333
52-1 Transmission Installation 10-333
52-2 Procedure for Priming the Hydraulic System 10-342

2. Preparation

■ Battery Removal

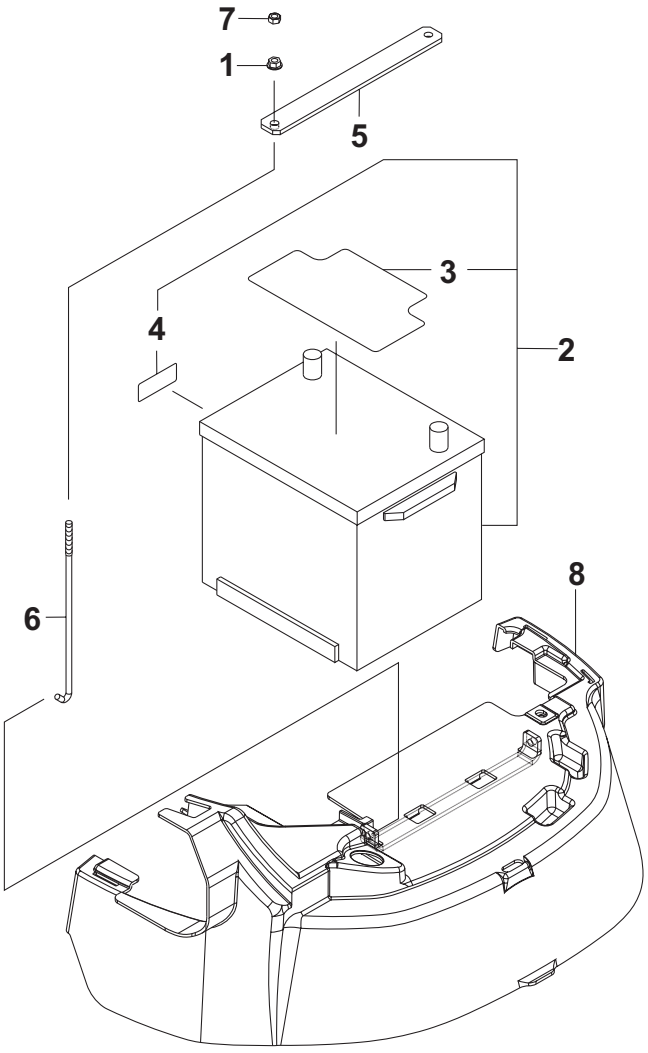

Fig. 1

REF.	Description	Q'TY.
1	Nut, M6	2
2	Battery, 26R, ASSY.	1
3	Label, Battery	1
4	Label, CA, 65, Warn	1
5	Clamp, Battery	1
6	Rod, Battery Clamp	2
7	Nut, 6	2
8	Cover M ASSY, Dash BTM	1

■ Battery Removal

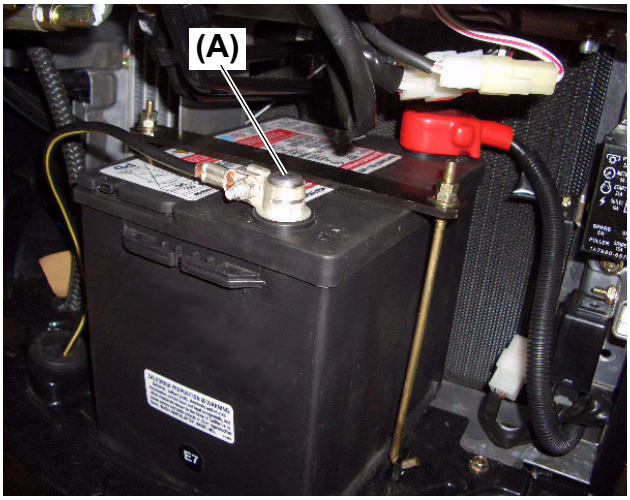

Fig. 2

(A) Negative terminal

1. Disconnect the negative battery cable **(Fig. 2, (A))** from the battery terminal.
2. Remove both jam nuts and nuts with washer from the battery J- Bolts.
3. Remove the battery retaining strap and J-bolts.
4. Slide the battery out to gain access to the positive battery cable.
5. Disconnect the positive cable from the battery terminal.
6. Remove battery from unit.

NOTE:

●Battery may need to be completely removed for some repairs.

■ Safety

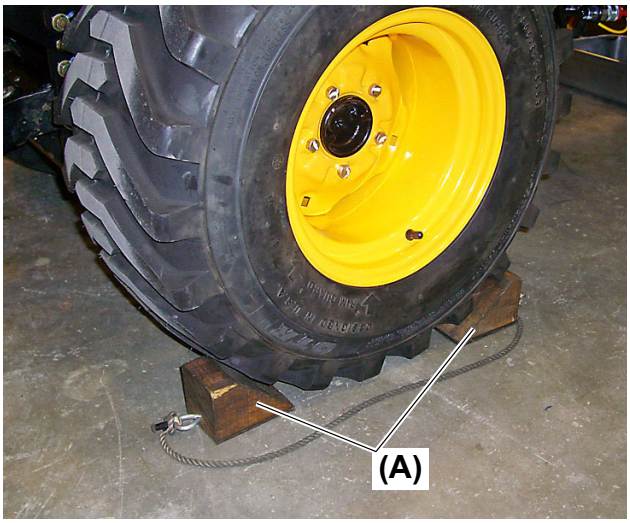

Fig. 3

(A) Wheel chock

7. Chock all the wheels to prevent accidental movement of unit.

■ Safety

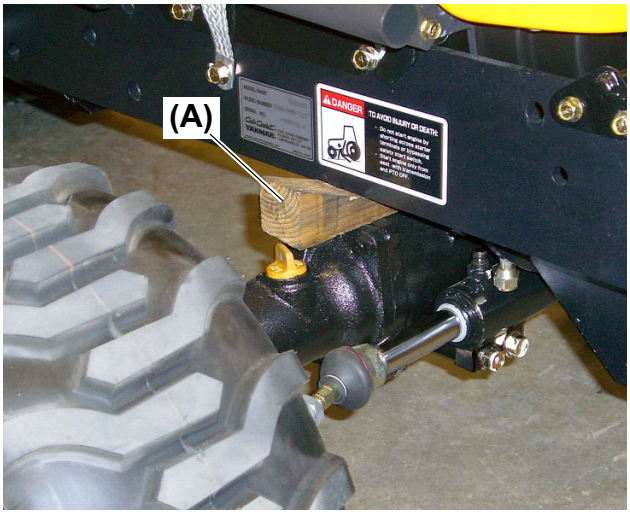

Fig. 4

(A) Wedge

8. When separating the transmission, be sure to lock the front axle with a wedge **(Fig. 4, (A))** to prevent the machine from tilting side to side.

3. 3-Point Hitch Separation

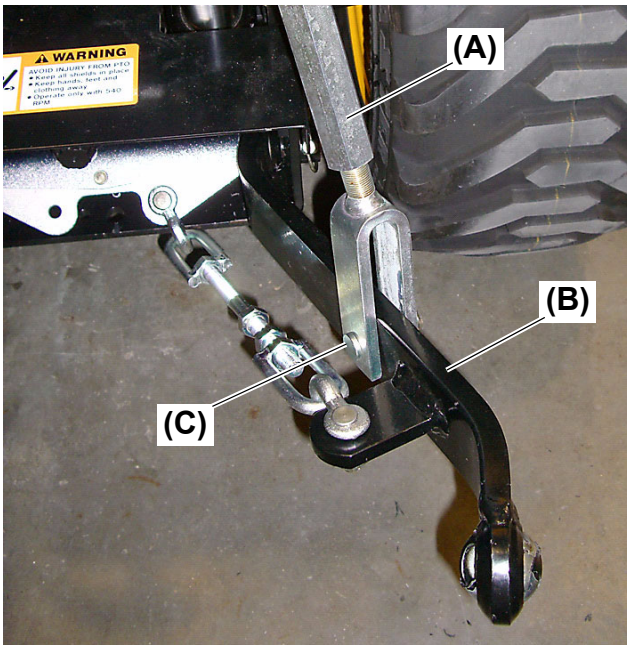

Fig. 1

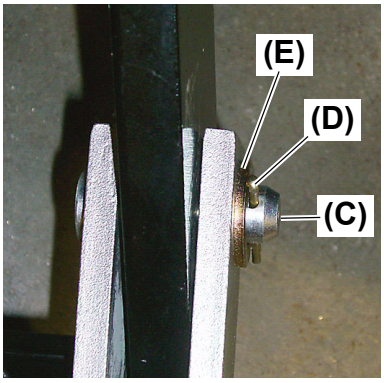

Fig. 2

(A) Lift rod
(B) Lower link
(C) Lift rod pin
(D) Cotter pin
(E) Washer

1. Remove the lift rod pin **(Fig. 1, 2, (C)**) by removing the washer **(Fig. 2, (E))** and cotter pin **(Fig. 2, (D))**. This will separate the lift rod **(Fig. 1, (A))** from the lower link **(Fig. 1, (B))**.

2. Use the same steps as above to separate the left-hand lift rod from the left-hand lower link.

■ Lift Rod



Fig. 3

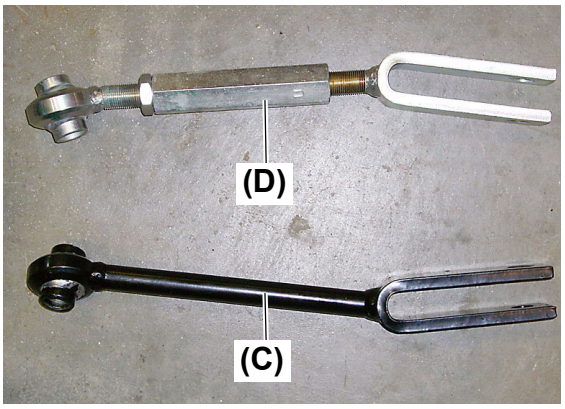

Fig. 4

(A) Lynch pin
(B) Lift rod
(C) Left lift rod
(D) Right lift rod

3. Remove the right lift rod **(Fig. 4, (D))** by removing the lynch pin **(Fig. 3, (A))**.

4. Remove the left lift rod **(Fig. 4, (C))** by removing the lynch pin **(Fig. 3, (A))**.

■ Top Link

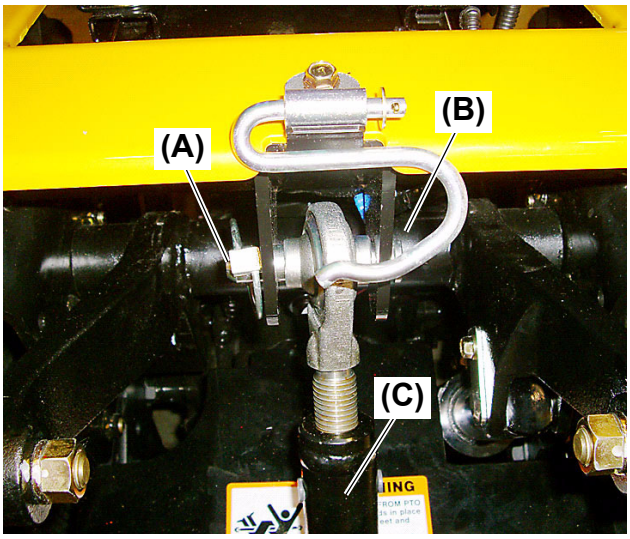

Fig. 5

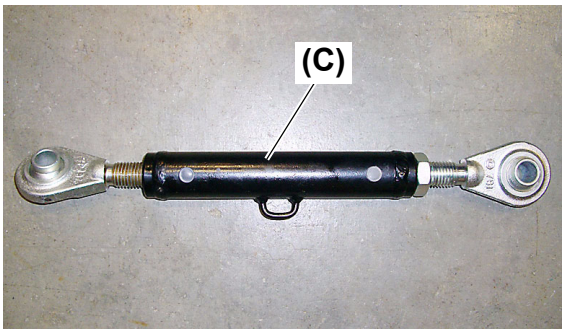

Fig. 6

(A) Lynch pin
(B) Top link pin
(C) Top link

5. Remove the top link **(Fig. 5, 6, (C))** by removing the lynch pin **(Fig. 5, (A))** and sliding the top link pin **(Fig. 5, (B))** from the lower frame.

■ Check Chain

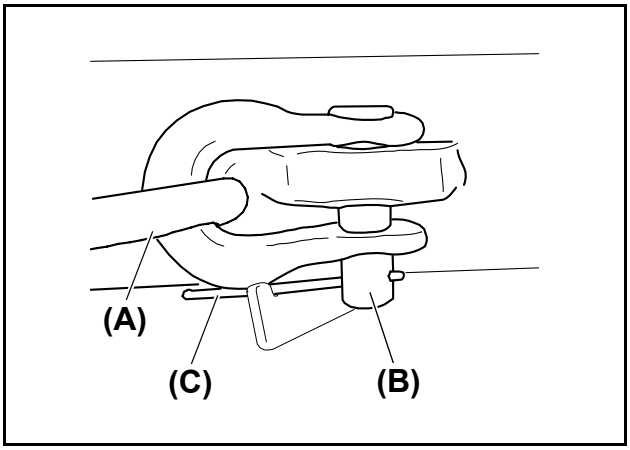

Fig. 7

(A) Check chain
(B) Pin dia. 12 × 35 mm (L: 1.4 in.)
(C) Cotter pin dia. 2.5 × 25 mm (L: 1.0 in.)

6. Remove cotter pin **(Fig. 7, (C))** from the 12 × 35 mm (L: 1.4 in.) pin **(Fig. 7, (B))** which connects the check chain assembly **(Fig. 7, (A))** to the lower link assembly.

7. Remove the pin **(Fig. 7, (B))**.

8. Repeat steps 1 through 2 for opposite side.

■ Check Chain

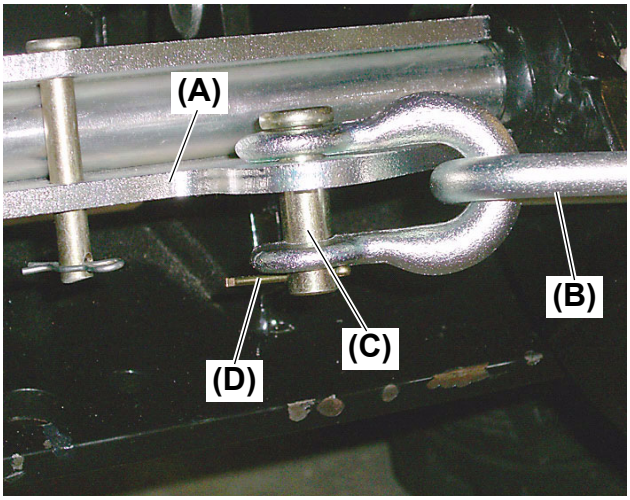

Fig.8

(A) Chain hinge
(B) Check chain
(C) Pin dia. 12 × 35 mm (L: 1.4 in.)
(D) Cotter pin 2.5 × 25 mm (L: 1.0 in.)

9. Remove the cotter pin 2.5 × 25 mm (L: 1.0 in.) **(Fig. 8, (D))** from the 12 × 35 mm (L: 1.4 in.) pin **(Fig. 8, (C))** which connects the check chain assembly to the chain hinge **(Fig. 8, (A))**.

10. Remove the pin **(Fig. 8, (C))** from the check chain assembly **(Fig. 8, (B))** and the chain hinge **(Fig. 8, (A))**.

11. Repeat steps 1 through 2 for the opposite side.

■ Check Chain Hinge

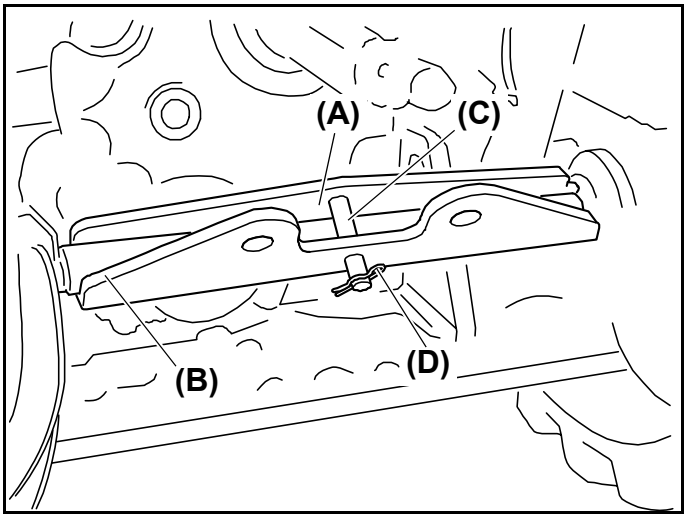

Fig. 9

(A) Chain hinge
(B) Lower link bar
(C) Pin dia. 8 × 35 mm (L: 1.4 in.)
(D) Snap pin

12. Pivot the chain hinge to gain access to the snap pin **(Fig. 9, (D))**.

13. Remove the snap pin **(Fig. 9, (D))** from the 8 × 35 mm (L: 1.4 in.) pin **(Fig. 9, (C))**.

14. Remove the 8 × 35 mm (L: 1.4 in.) pin **(Fig. 9, (C))** from the chain hinge **(Fig. 9, (A))**.

■ Check Chain Hinge

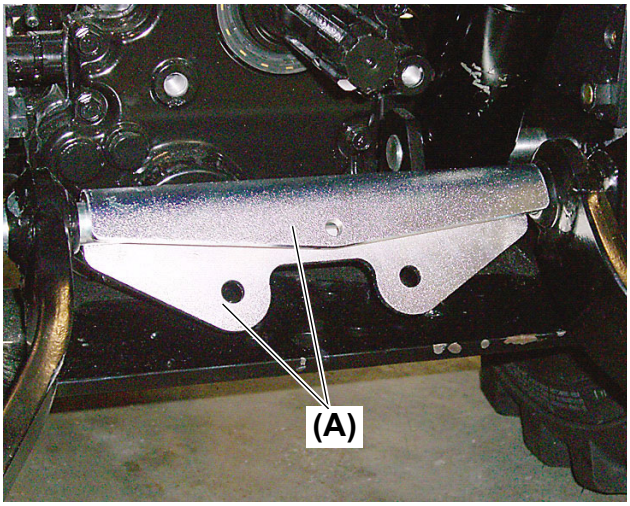

Fig.10

(A) Chain hinge

15.Remove the chain hinge **(Fig. 10, (A))** by rotating it off the lower link bar.

■ Lower Link / Lower Link Bar

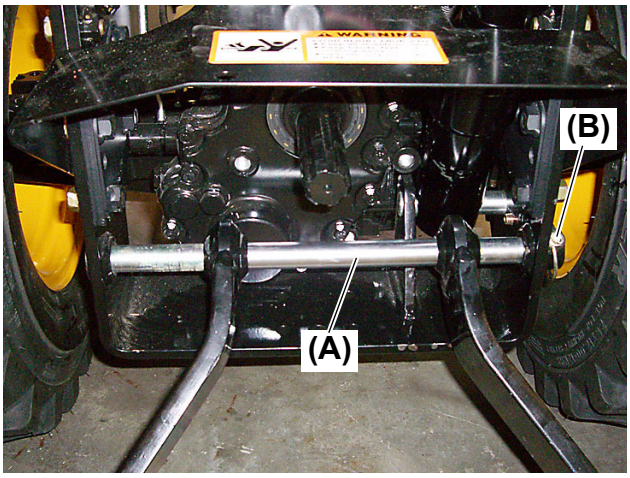

Fig. 11

(A) Lower link bar
(B) Lynch pin

16.Remove the lynch pin **(Fig. 11, (B))** from the lower link bar **(Fig. 11, (A))**.

■ Lower Link / Lower Link Bar

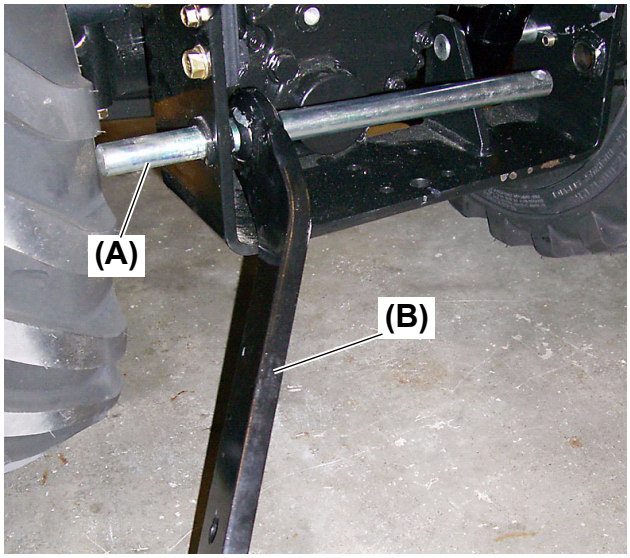

Fig.12

(A) Lower link bar
(B) Lower link

17.Slide the lower link bar **(Fig. 12, (A))** to the far left to remove the right side lower link assembly (Not Shown).

18.Slide the lower link bar **(Fig. 12, (A))** to the far right to remove the left side lower link assembly **(Fig. 12, (B))**.

⚠ CAUTION

●Note that suddenly pulling out the lower link bar causes the lower link to fall.

■ Top Link Holder

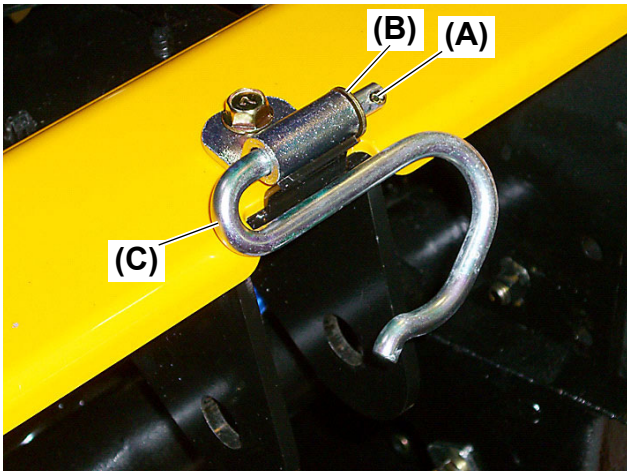

Fig. 13

(A) Cotter pin 2.5 × 25 mm (L: 1.0 in.)
(B) Washer
(C) Top link holder

19.Remove cotter pin **(Fig. 13, (A))** and washer **(Fig. 13, (B))**.

20.Remove the top link holder **(Fig. 13, (C))** from the top link plate.

■ Top Link Holder Plate

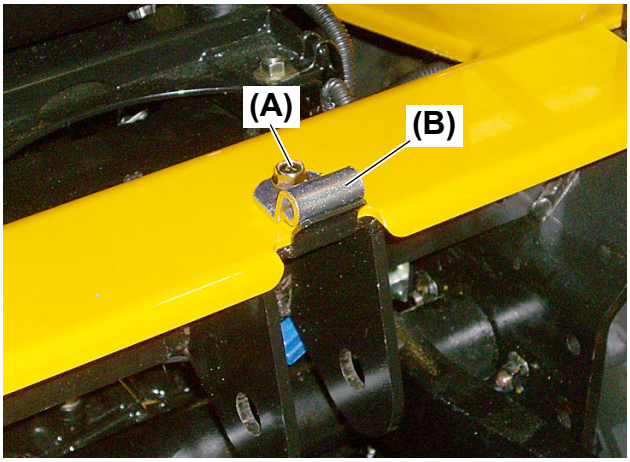

Fig.14

(A) Bolt M8 × 20 mm (L: 0.8 in.)
(B) Plate

21. Remove the M8 × 20 mm (L: 0.8 in.) bolt **(Fig. 14, (A))** securing the top link plate **(Fig. 14, (B))** to the rear fender.

22. Remove the plate.

23. Installation of 3-point hitch components is the reverse order of removal.

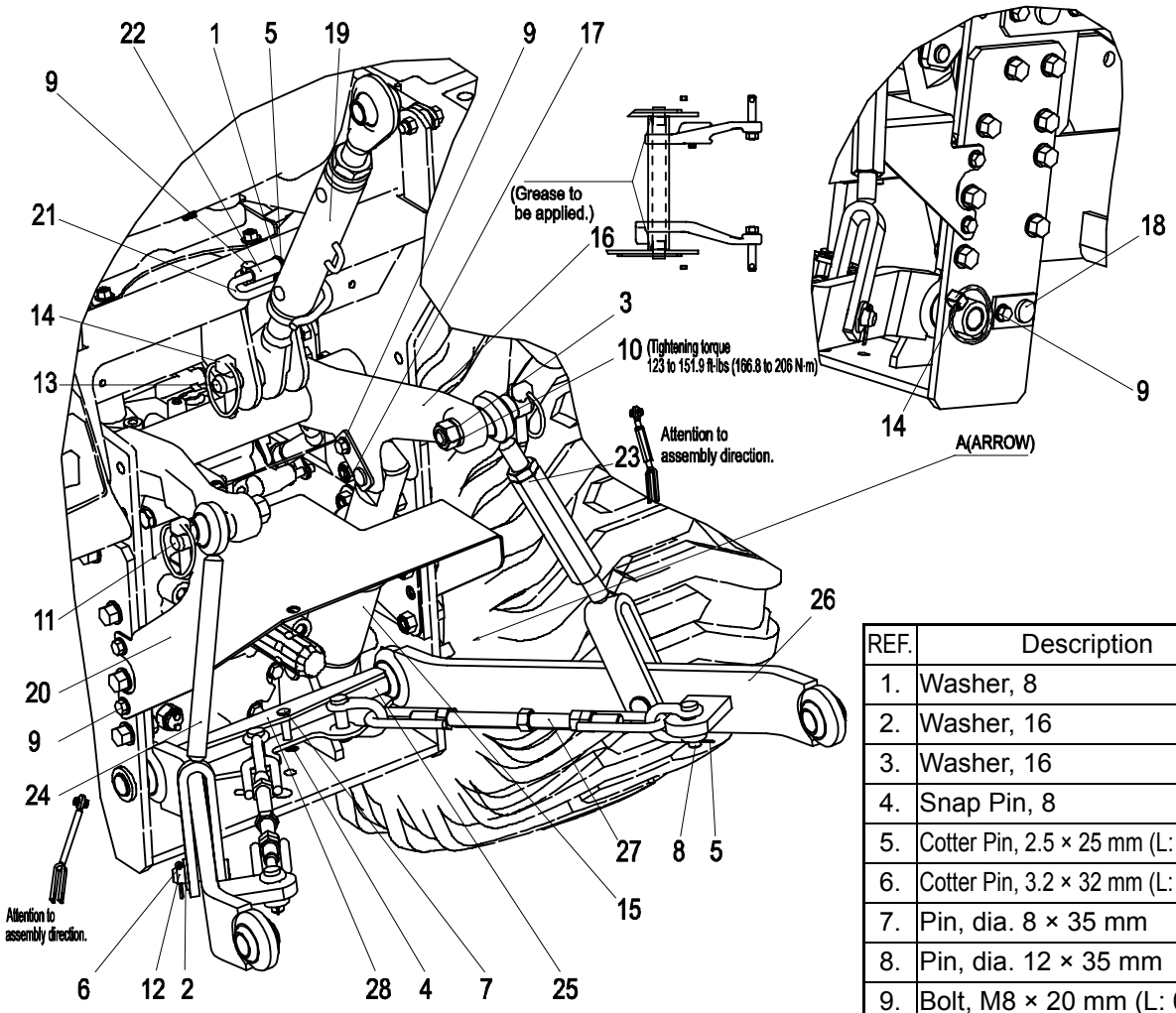

Fig. 15

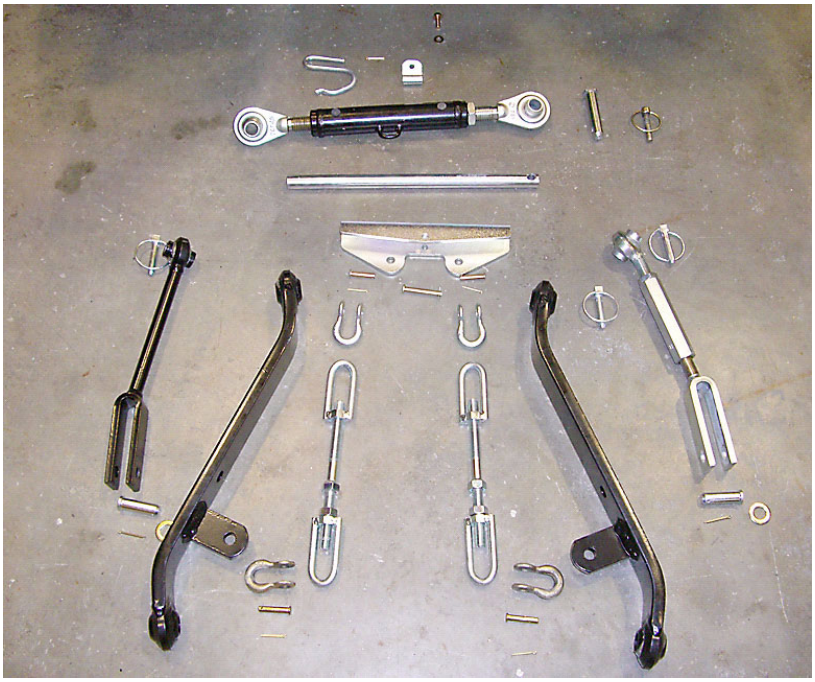

Fig. 16

REF.	Description	Q'TY.
1.	Washer, 8	1
2.	Washer, 16	2
3.	Washer, 16	2
4.	Snap Pin, 8	1
5.	Cotter Pin, 2.5 × 25 mm (L: 1.0 in.)	5
6.	Cotter Pin, 3.2 × 32 mm (L: 1.28 in.)	2
7.	Pin, dia. 8 × 35 mm	1
8.	Pin, dia. 12 × 35 mm	4
9.	Bolt, M8 × 20 mm (L: 0.8 in.)	7
10.	Nut, 16	2
11.	Pin (Lift arm	2
12.	Pin (Lift rod	2
13.	Pin (Top link	1
14.	Lynch Pin	4
15.	Lift Cylinder	1
16.	Lift Arm KIT	1
17.	Pin (Lift Arm	1
18.	Pin19 (Cylinder	1
19.	Top Link	1
20.	Cover (PTO	1
21.	Spring	1
22.	Plate (Top link	1
23.	Lift Rod R	1
24.	Lift Rod L	1
25.	Lower Link Bar	1
26.	Lower Link	2
27.	Check Chain	2
28.	Hinge (Check Chain	1

4. Hood

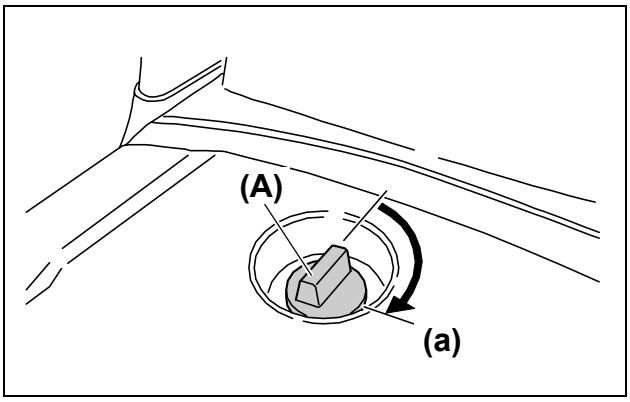

Fig. 1

(A) Engine hood open / close knob
(a) Open

⚠ CAUTION

- **Do not open the engine hood while the engine is running.**
- **Do not touch the hot muffler or exhaust pipe.**

1. Turn the engine hood latch knob **(Fig. 1, (A))** clockwise while pushing hood toward the dashboard area.

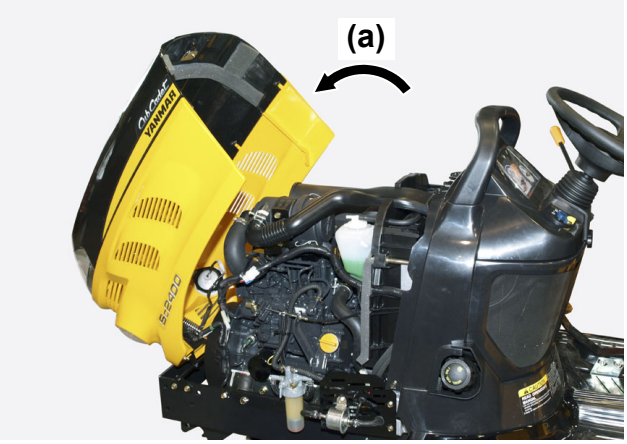

Fig. 2

(a) Tilt the engine hood forward

2. Lift up the engine hood with both hands and tilt it forward **(Fig. 2, (a))**.

■ Headlight Harness

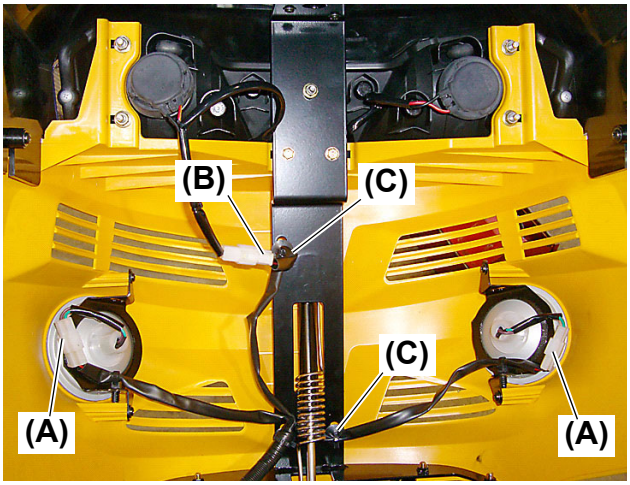

Fig. 3

(A) Work light coupler
(B) Headlight connector
(C) Harness clip

3. Disconnect the harness at coupler **(Fig. 3, (A))**.

4. Remove the harness clips **(Fig. 3, (C))** from the hood hinge.

NOTE:

- The harness clips are held in a key hole slot. To remove slide up and lift out. DO NOT cut or pull. For installation, simply insert them into the smaller holes.

5. Remove the harness from the headlight connectors **(Fig. 3, (B))**.

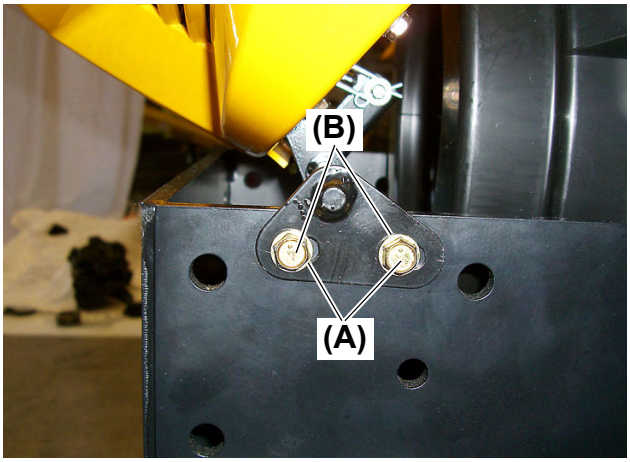

Fig. 4



Fig. 5

(A) Bolt M8 × 12 mm (L: 0.48 in.)
(B) Hood hinge bracket

6. Remove the two (2) M8 × 12 mm (L: 0.48 in.) bolts **(Fig. 4, (A))** from each side.

NOTE:

- The holes in the hood hinge bracket **(Fig. 4, (B))** are slotted for adjusting the hood alignment for proper fit.

⚠ CAUTION

- **In order to avoid falling of the engine hood, two (2) persons should work together.**

IMPORTANT

- The engine hood hinge has elongated holes. Therefore, marking prior to its removal allows the mounting position of the engine hood to be easily adjusted.

4. Hood

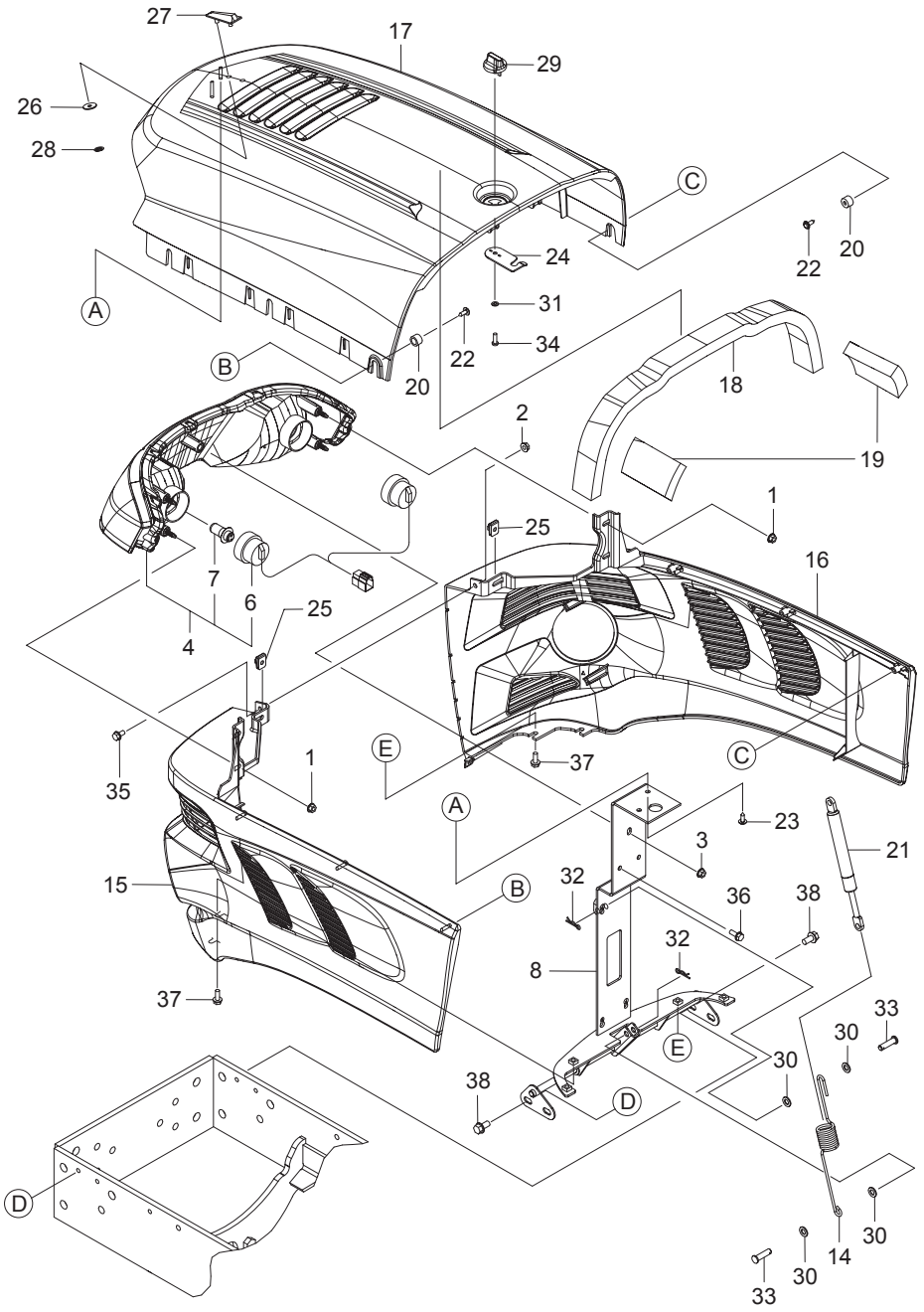

Fig. 6

REF.	Description	Q'TY.
1	Nut, M6	4
2	Nut, M6	1
3	Nut, M6	1
4	Lamp ASSY., Head	1
6	Wire, Lead Head Lamp	1
7	Bulb, Halogen 12 V 30/30	2
8	Hinge Hood	1
14	Spring, Hood Hinge	1
15	Hood, Lower LH	1
16	Hood, Lower RH	1
17	Hood, Upper	1

REF.	Description	Q'TY.
18	Seal, Hood Upper	1
19	Cushion, Hood Rear	2
20	Collar, 10 × 15 × 10	6
21	Spring, Gas	1
22	Screw, M5 × 16 (L: 0.64 in.)	6
23	Screw, M5 × 16 (L: 0.64 in.)	2
24	Stopper Hood	1
25	Nut, M6	2
26	Cushion	2
27	Mark, Top	1
28	28Nut, M5	2

REF.	Description	Q'TY.
29	Knob, Latch	1
30	Washer, 8	4
31	Washer, 5	1
32	Pin, 8	2
33	Pin, 8 x 26	2
34	Screw, 5.0 × 16	1
35	Bolt, 6 × 12 (L: 0.48 in.)	1
36	Bolt, 6 × 16 (L: 0.64 in.)	2
37	Bolt, 6 × 16 (L: 0.64 in.)	4
38	Bolt, 8 × 16 (L: 0.64 in.)	4

■ Hood Hinge

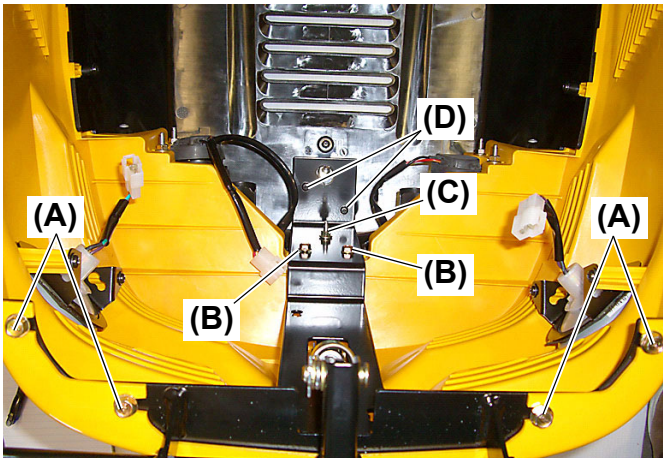

Fig. 7

(A) Bolt M6 × 16 mm (L: 0.64 in.): 4 pieces
(B) Bolt M6 × 16 mm (L: 0.64 in.): 2 pieces
(C) Nut M6: 1 piece
(D) Screw M5 × 16 mm (L: 0.64 in.): 2 pieces

7. Remove the four (4) M6 × 16 mm (L: 0.64 in.) bolts **(Fig. 7, (A))** that secure the lower portion of the hood hinge to the hood.

8. Remove the two (2) M6 × 16 mm (L: 0.64 in.) bolts **(Fig. 7, (B))** that secure the center of the hood hinge to the hood.

9. Remove M6 nut **(Fig. 7, (C))** from the center of the hood hinge.

10. Remove the two (2) M5 × 16 mm (L: 0.64 in.) screws **(Fig. 7, (D))** from the hood hinge.

NOTE:

●Tightening torque for assembling (Screw D): 1.8 to 2.5 ft•lbs (2.5 to 3.4 N•m)

■ Hood Hinge



Fig. 8

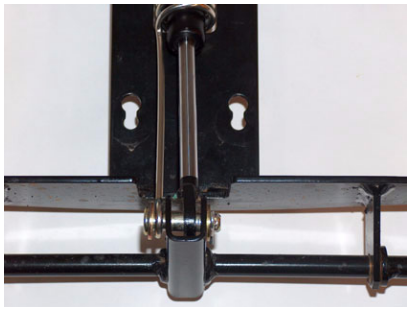

Fig. 9

Lower mounting of gas spring and hood hinge spring.
The extension spring is positioned to the outside of the hinge yoke. The gas spring is positioned inside of the hinge yoke.



Fig. 10

Upper mounting of gas spring and hood hinge spring.
The extension spring is positioned to the outside of the upright yoke. The gas spring is positioned inside of the outside yoke.

■ Headlight Assembly

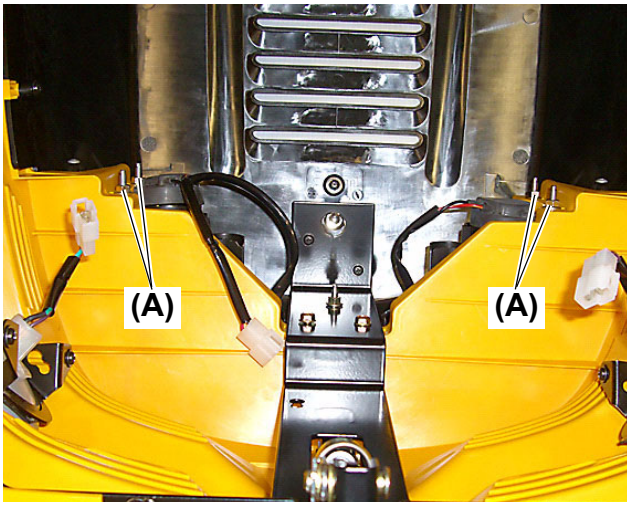

Fig. 11

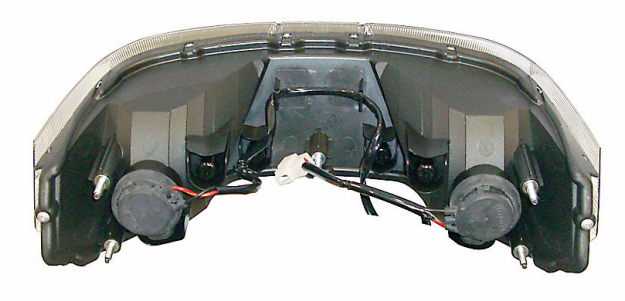

Fig. 12

(A) Nut M6 : 4 pieces

11.Remove the six (6) screws that secure the upper hood to the Left and right hand lower hood.

12.Remove the four (4) M6 nuts **(Fig. 11, (A))** to remove the headlight assembly.

13.Remove the headlight assembly.

⚠ CAUTION

- **When replacing the Halogen Bulb be careful not to touch with fingers, always use a clean cloth or paper towel free of any oil. The oils from your hands can damage the halogen bulbs and cause premature failure.**

NOTE:

- Tightening torque for assembling (Nut (A)): 1.8 to 2.5 ft•lbs (2.5 to 3.4 N•m)

■ Side Lamp

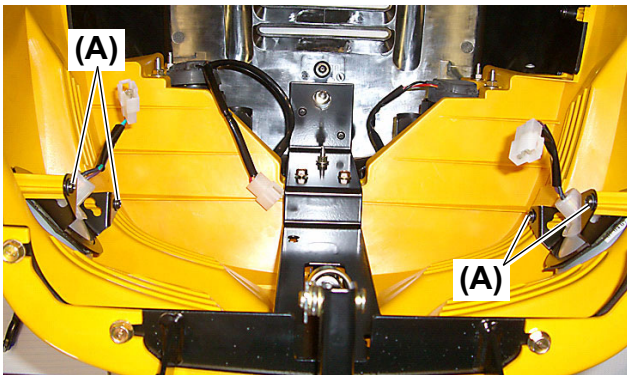

Fig. 13

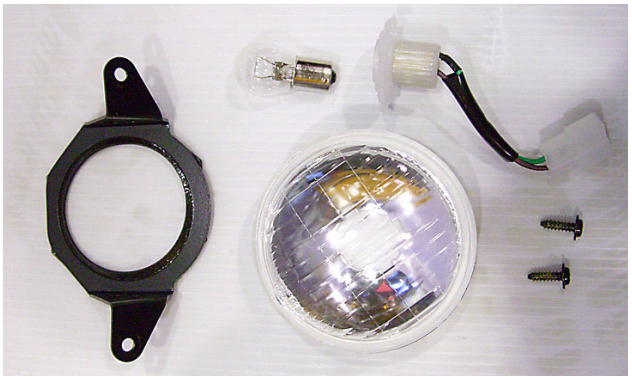

Fig. 14



Fig. 15

(A) Screw M5 × 16 mm (L: 0.64 in.): 4 pieces

14. Remove the two (2) M5 × 16 mm (L: 0.64 in.) screws **(Fig. 13, (A))** that retain the lamp stay to the lower hood.

15. Remove the side lamp assembly (Work Light).

16. When installing the lamp assembly make sure the drain hole is positioned to line up with the triangular mark in the lower hood as shown in **Fig. 15**.

5. Turn Signal / Hazard Light Removal

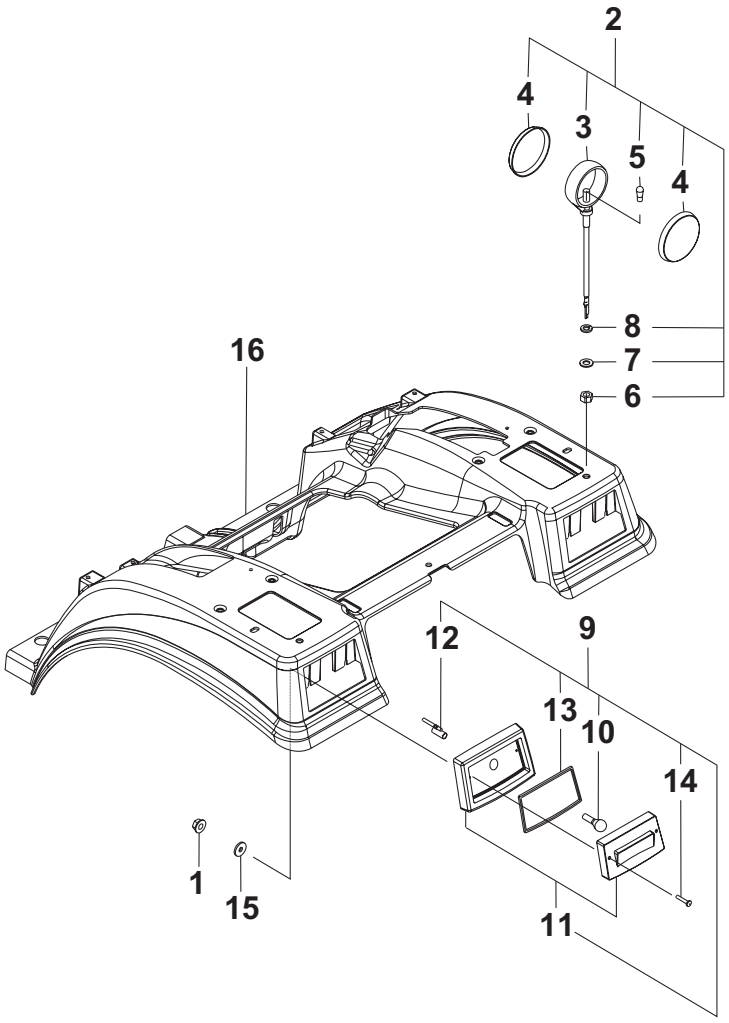

Fig. 1

REF.	Description	Q'TY.
1	Nut, M6	4
2	Lamp ASSY, Flasher	2
3	Housing	2
4	Lens cover	4
5	Bulb	2
6	Nut, 1/2	2
7	Washer, 13	2
8	Washer, 13	2

REF.	Description	Q'TY.
9	Lamp, Tail	2
10	Bulb 12 V – 21 / 5 W	2
11	Lens ASSY.	2
12	Housing Semi ASSY	2
13	Gasket	2
14	Screw, M6 × 32 (L: 1.28 in.)	4
15	Washer, 6	4
16	Fender	1

■ Turn Signal / Hazard Light

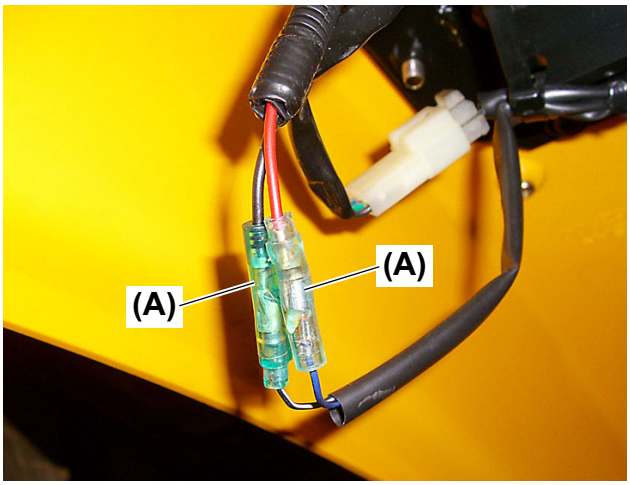

Fig. 2

(A) Wire butt connectors

1. Disconnect the two (2) wire butt connectors **(Fig. 2, (A))** of the turn signals from the wire harness.

■ Turn Signal / Hazard Light



Fig. 3

(A) Nut 1/2 in.

2. Loosen the 1/2 in. nut **(Fig. 3, (A))** from the right hand turn signal / hazard light.
3. Remove the nut, lock washer and flat washer from the bottom side.
4. Remove the right hand turn signal / hazard light from the Roll-Over Protective Structure (ROPS) bracket.
5. Remove the left hand turn signal / hazard light in the same manner as steps 1 through 2.

■ Turn Signal / Hazard Light

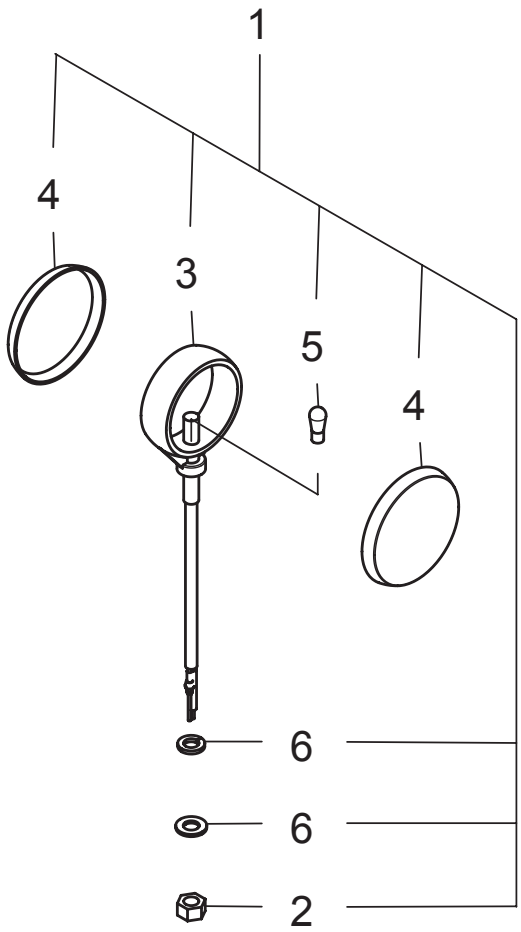

Fig. 4

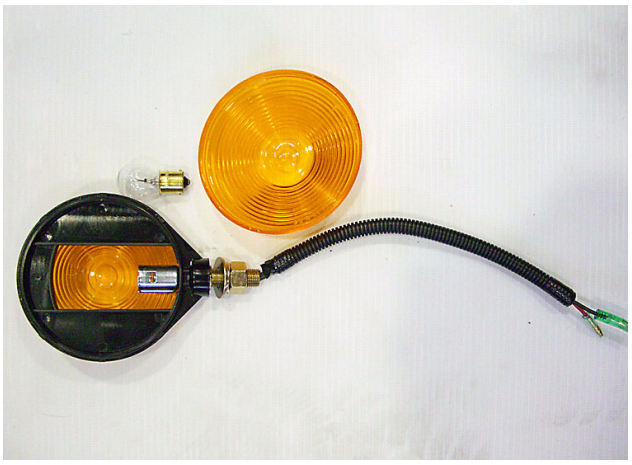

Fig. 5

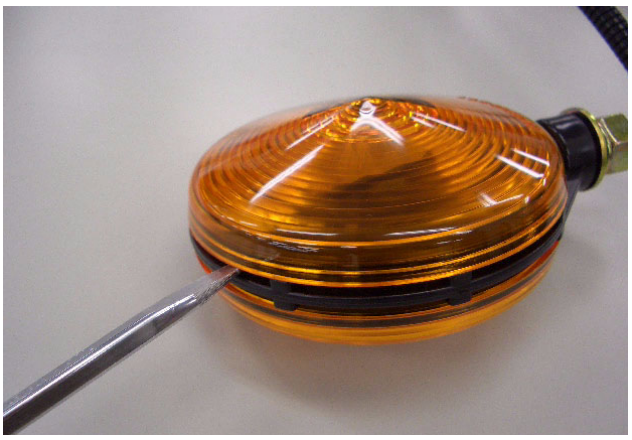

Fig. 6

REF.	Description	Q'TY.
1	Lamp ASSY., Flasher	2
2	Nut, 1/2	2
3	Housing	2
4	Lens cover	4
5	Bulb	2
6	Washer, 13	4

6. In order to remove the turn signal / hazard light bulb **(Fig. 4, (Ref. # 5))**, insert a flatblade screwdriver between the amber lens cover and the housing and twist the screwdriver to remove the amber lens cover **(Fig. 5)**.

7. Reassembly and installation of the hazard light assembly and / or hazard light bulb is the reverse of removal and / or disassembly.

6. Roll-Over Protective Structure (ROPS) Upper

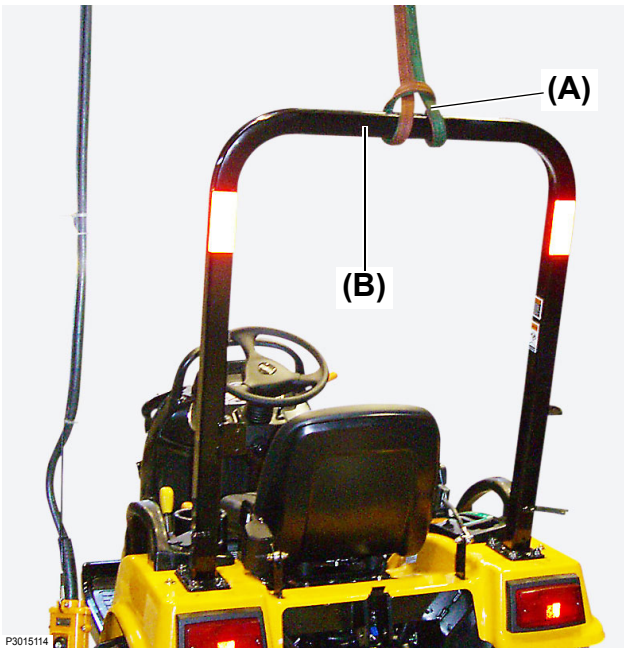

Fig. 1

(A) Sling
(B) Roll-Over Protective Structure (ROPS) upper

1. Disconnect the left and right turn signal / flasher wires from the main harness.

2. Attach a sling **(Fig. 1, (A))** etc. to the Roll-Over Protective Structure (ROPS) upper **(Fig. 1, (B))** and use a hoist crane, etc. so as to prevent the upper Roll-Over Protective Structure (ROPS) from falling on any nearby people.

■ Roll-Over Protective Structure (ROPS)

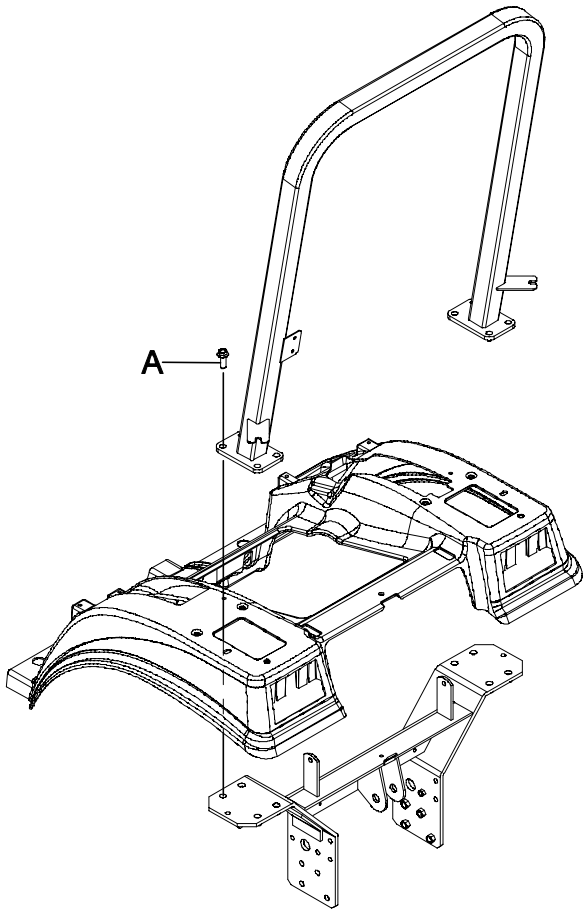

Fig. 2

(A) Bolt M12 × 34 mm (L: 1.36 in.) : 8 pieces

3. Remove the eight (8) bolts **(Fig. 2, (A))**, four (4) per side securing the upper Roll-Over Protective Structure (ROPS) to the lower frame.

⚠ CAUTION

- **Due to the weight of the upper Roll-Over Protective Structure (ROPS) assistance from a crane and another technician is recommended.**

NOTE:

- For a machine with turn signals (flasher lights), disconnect the connector of turn signal from main harness.

■ Roll-Over Protective Structure (ROPS)



Fig. 3

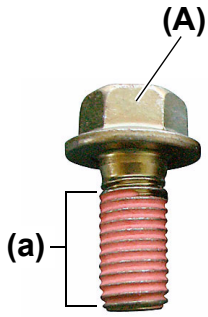

Fig. 4

(A) Bolt M12 × 34 mm (L: 1.3 in.)
(a) Portion to which thread locking compound is applied

4. Remove the Roll-Over Protective Structure (ROPS) upper by lifting it with a crane.

5. It is recommended to replace the bolts **(Fig. 4, (A))** used to secure the Roll-Over Protective Structure (ROPS) with new bolts any time the Roll-Over Protective Structure (ROPS) has been removed from the tractor.

⚠ WARNING

- **Two (2) or more persons should work together so as not to swing the Roll-Over Protective Structure (ROPS) upper. Protective helmets should be worn during this operation.**

⚠ CAUTION

- **If the bolts are to be reused it is Mandatory to clean the threads and install the bolts using thread locking compound.**
  Torque the bolts to 79.7 to 93.7 ft•lbs (108 to 127 N•m).

IMPORTANT

- Before reinstalling the M12 × 34 mm (L: 1.3 in.) screw, remove old thread locking compound on it with a wire brush and then apply new thread locking compound to the portion **(Fig. 4, (a))**.

7. Safety belt / Seat

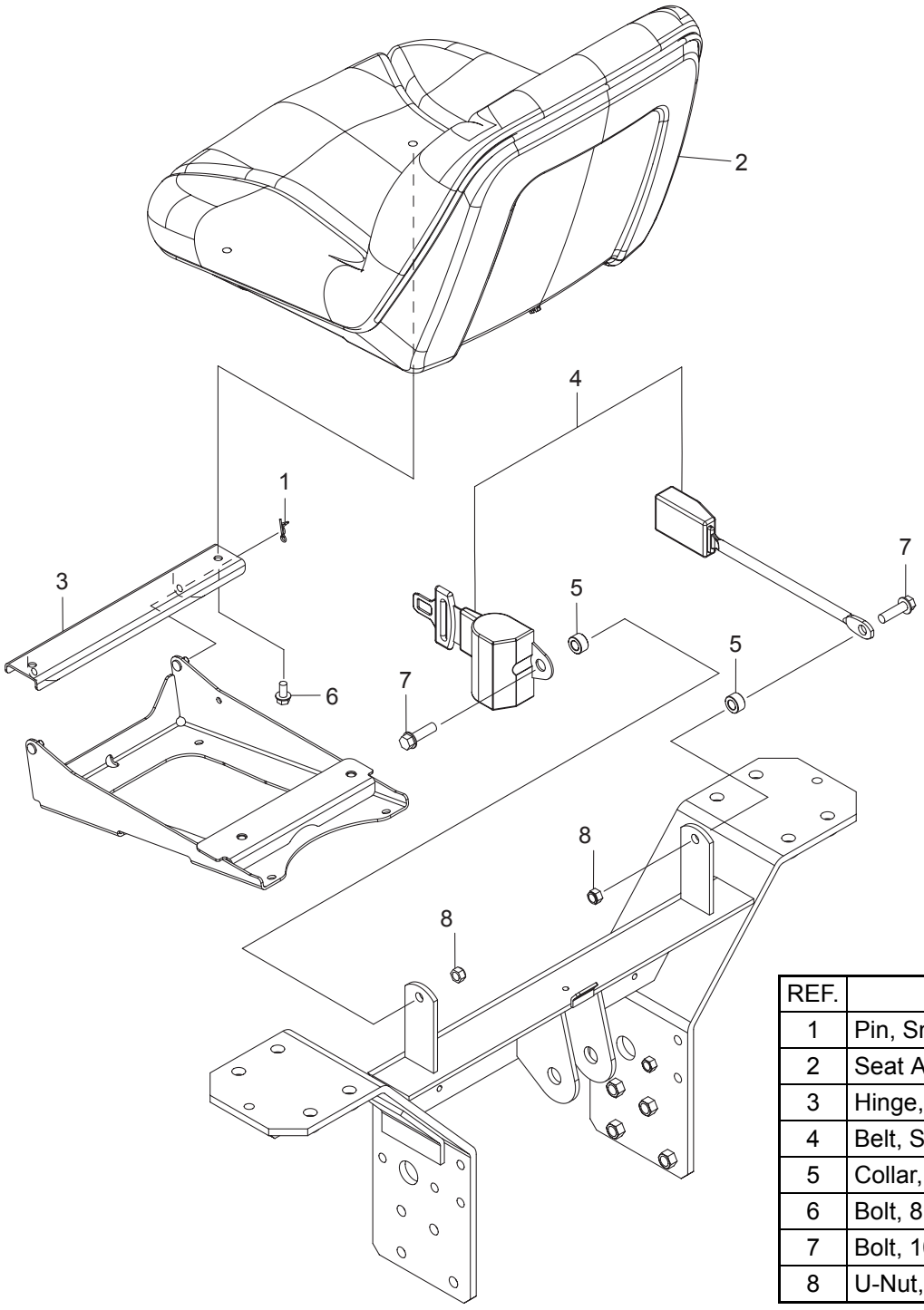

REF.	Description	Q'TY.
1	Pin, Snap	1
2	Seat ASSY., Operator	1
3	Hinge, Seat	1
4	Belt, Safety	1
5	Collar, Seat Belt	2
6	Bolt, 8 × 16 (L: 0.64 in.)	2
7	Bolt, 10 × 35 (L: 1.40 in.)	2
8	U-Nut, 10	2

Fig. 1

■ Safety Belt

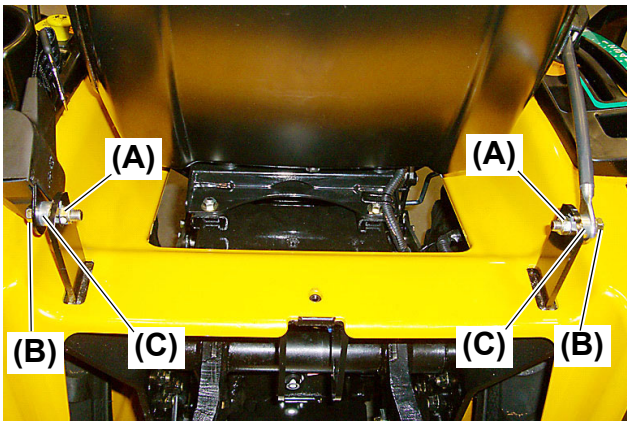

Fig. 2



Fig. 3

(A) Nylon locking nut
(B) Bolt M10 × 35 mm (L: 1.40 in.)
(C) Collar

1. Remove the nylon locking nut **(Fig. 2, (A))** from the M10 × 35 mm (L: 1.40 in.) bolt **(Fig. 2, (B))**. A collar **(Fig. 2, (C))** is located between the seat belt assembly and the bracket.

NOTE:

●Be careful to avoid falling of the collar.

■ Operator Seat

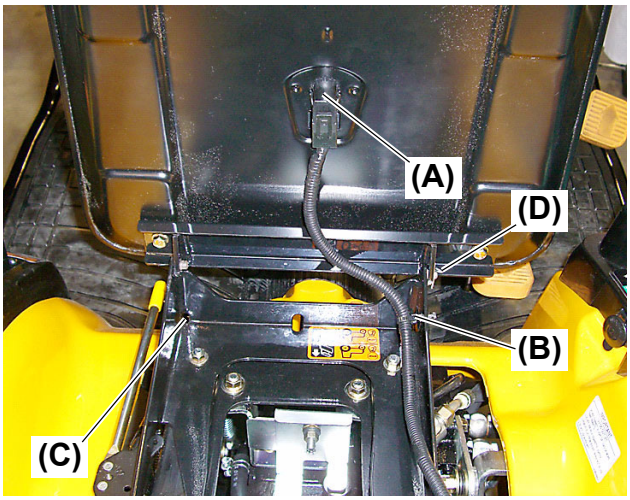

Fig. 4

(A) Seat switch
(B) Harness clip
(C) Seat rail "B"
(D) Snap pin

2. Remove the wire harness connector from the seat switch **(Fig. 4, (A))**.

3. Remove the harness clip **(Fig. 4, (B))** from the seat rail "B" **(Fig. 4, (C))**.

4. Remove the operator seat assembly from the rail "B" stay by removing the snap pins **(Fig. 4, (D))**.

5. Slide the operator seat assembly off of the pins on the rail "B" stay.

⚠ CAUTION

- **When setting the seat off to the side, it is recommended to set the seat with the bottom facing up to prevent damage to the seat switch.**

8. Seat Stay

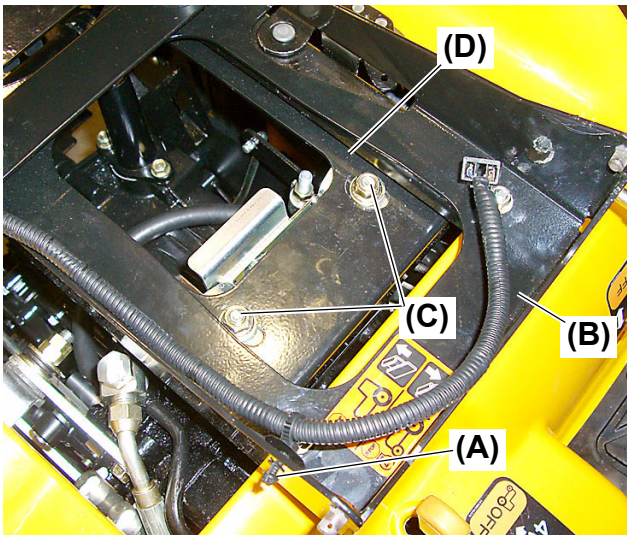

Fig. 1

(A) Harness clip
(B) Seat rail "B"
(C) Nut M10
(D) Seat rail "A"

1. Remove the harness clip **(Fig. 1, (A))** if not removed prior from the rail "B" stay **(Fig. 1, (B))**.

2. Remove the two (2) M10 nuts **(Fig. 1, (C))** that secure the rail "A" stay to the seat stay.

■ Seat Stay

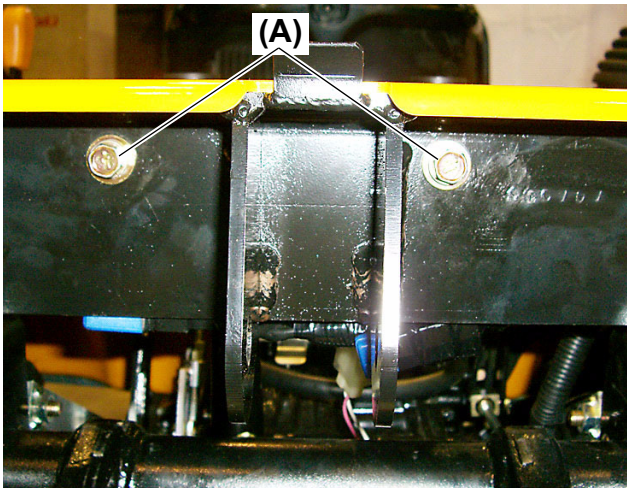

Fig. 2

(A) Bolt M10 × 25 mm (L: 1.0 in.)

3. Remove the two (2) M10 × 25 mm (L: 1.0 in.) bolts **(Fig. 2, (A))** that secure the rail "A" stay to the lower frame.

■ Seat Rail Assembly

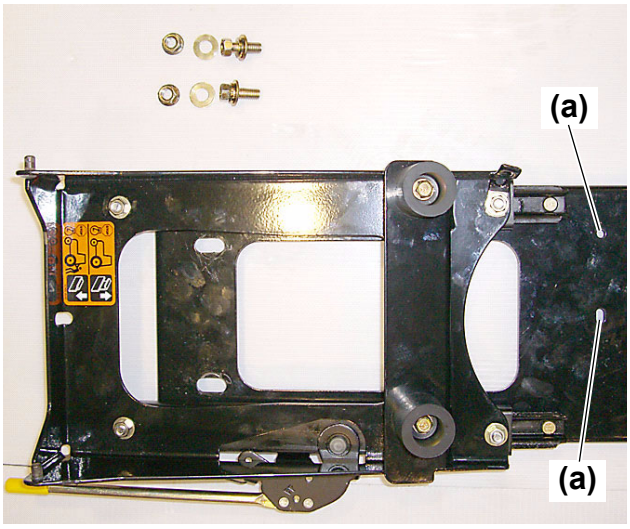

Fig. 3

Rail "A" & Rail "B" Assembly

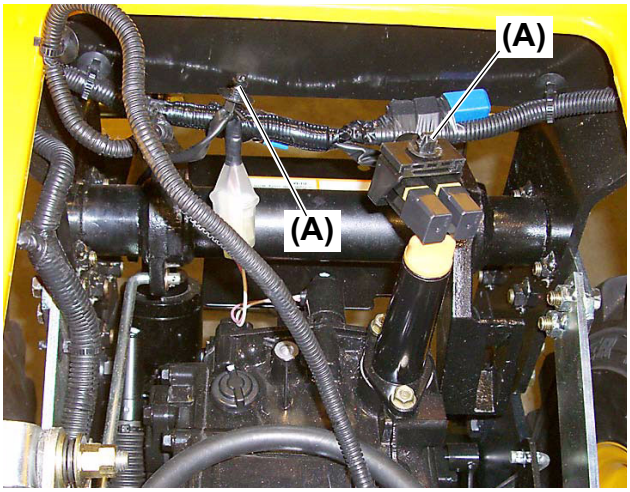

Fig. 4

(A) Electrical parts

4. Remove the rail "A" & "B" as an assembly.

IMPORTANT

- Electrical parts have been fixed to the portion **(Fig. 3, (a))** at the rear of the seat stay. Make sure to remove all of them.

■ Seat Rail Assembly

REF.	Description	Q'TY.
1	Nut, M8	4
2	Spring	3
3	Stay (Seat	1
4	Cushion	2
5	Collar	2
6	Stay, Rail A	1
7	Rail, Seat	1
8	Rail, Seat Lever	1
9	UNC Nut 5/16-18	4
10	Plate, Switch	1
11	Stay, Rail B	1
12	Washer, 8	1
13	Washer, 8	4
14	Bolt, 10 × 25 (L: 1.0 in.)	2
15	Bolt, 8 × 25 (L: 1.0 in.)	2
16	Bolt, 10 × 16 (L: 0.64 in.)	2
17	U-Nut, 8	1
18	Nut, 10	2
19	Bolt, 8 × 16 (L: 0.64 in.)	4
20	Washer, 10	2

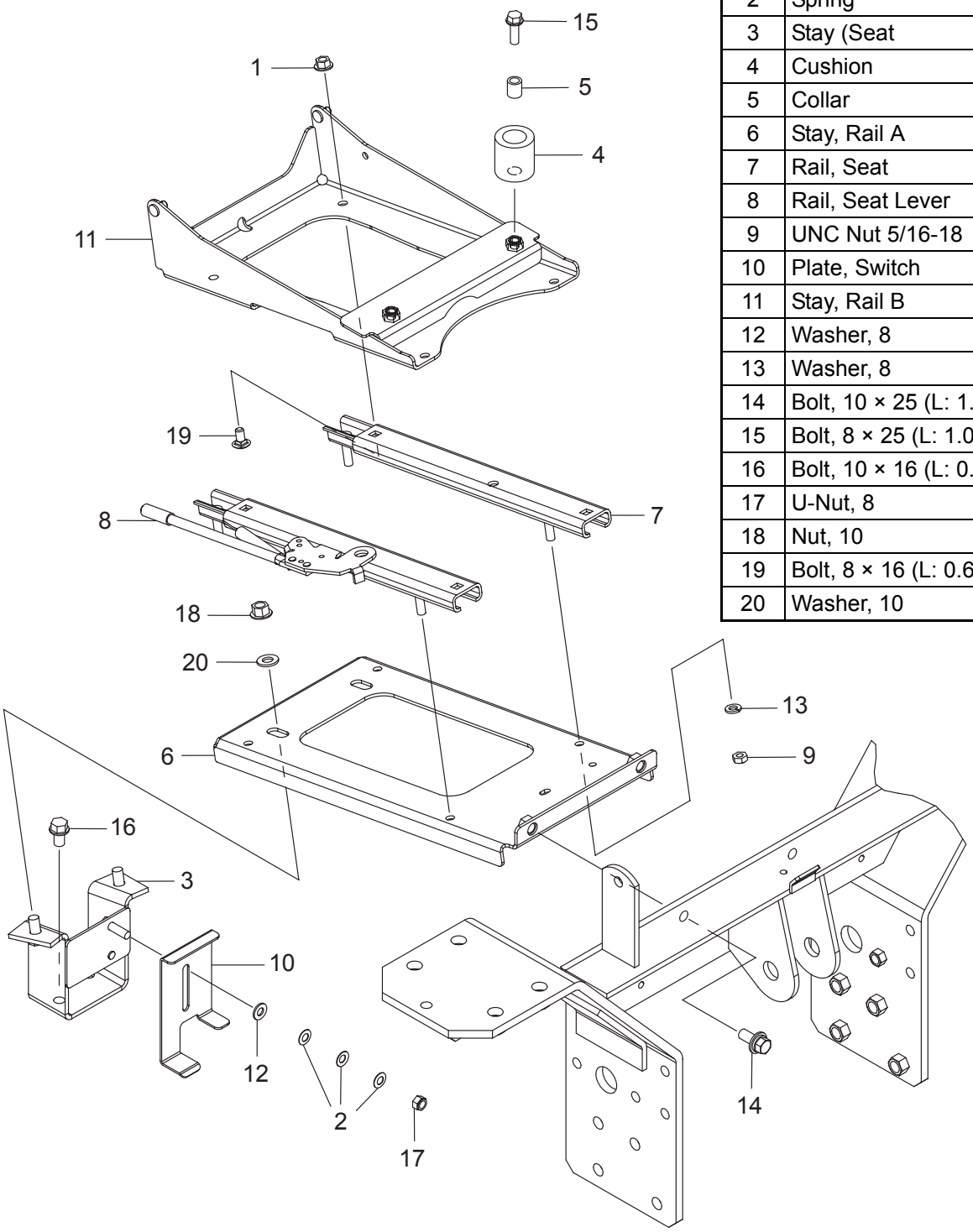

Fig. 5

9. Hydro Static Transmission (HST) Pedal

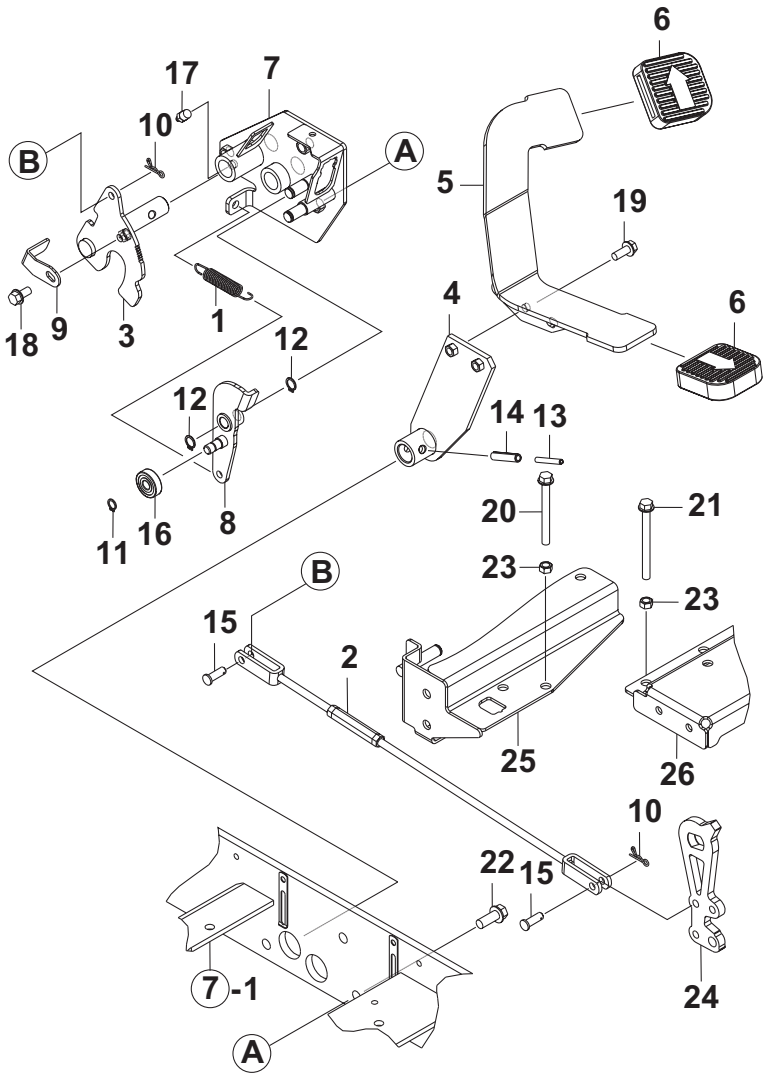

Fig. 1

REF.	Description	Q'TY.
1	Spring, Return	1
2	Rod ASSY, HST	1
3	Arm, HST	1
4	Pedal, Arm	1
5	Pedal, HST	1
6	Head, Pedal	2
7	Fulcrum, Pedal	1
8	Arm, Switch	1
9	Arm, Switch	1
10	Pin, Snap	2
11	Ring, 10	1
12	Ring, 12	2
13	Pin, 5.0a × 40 (L: 1.6 in.)	1

REF.	Description	Q'TY.
14	Pin, 8.0a × 40 (L: 1.6 in.)	1
15	Pin, 8 × 20 (L: 0.8 on.)	2
16	Bearing, 6200 UU	1
17	Fitting, PT 1/8	1
18	Bolt, 8 × 16 (L: 0.64 in.)	1
19	Bolt, 8 × 20 (L: 1.6 in.)	2
20	Bolt, 8 × 80 (L: 3.2 in.)	1
21	Bolt, 8 × 90 (L: 3.6 in.)	1
22	Bolt, 10 × 25 (L: 1.0 in.)	3
23	Nut, 8	2
24	Arm, Control	1
25	Stay RF, Step	1
26	Stay RR, Step	1

■ Hydro Static Transmission (HST) Pedal

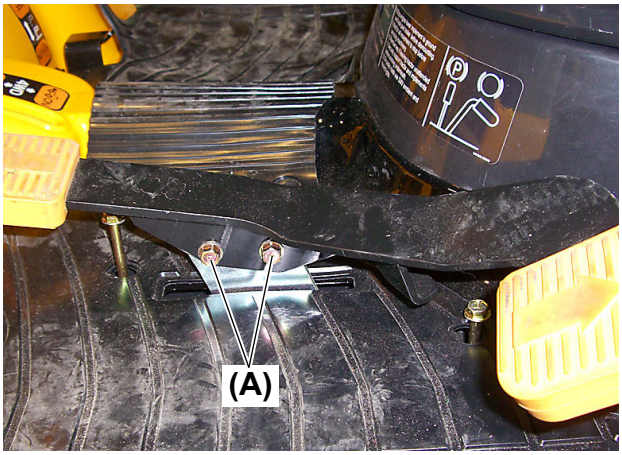

Fig. 2

(A) Bolt M8 × 20 mm (L: 0.8 in.)

1. Remove the two (2) M8 × 20 mm (L: 0.8 in.) bolts **(Fig. 2, (A))** that secure the Hydro Static Transmission (HST) pedal to the arm pedal.

■ Hydro Static Transmission (HST) Pedal

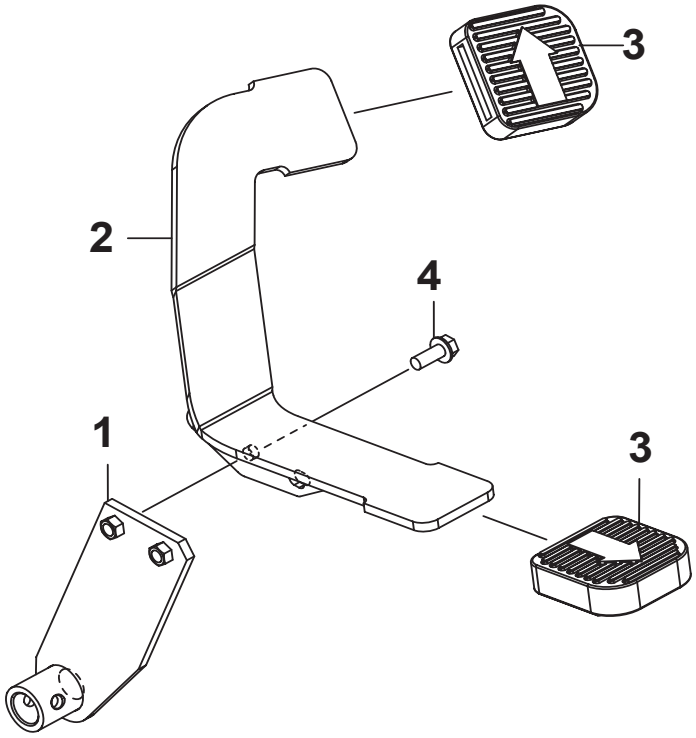

REF.	Description	Q'TY.
1	Pedal, Arm	1
2	Pedal, HST	1
3	Head, Pedal	2
4	Bolt, 8 × 20 (L: 0.8 in.)	2

Fig. 3

2. When replacing the Hydro Static Transmission (HST) pedal **(Fig. 3, (Ref. # 2))** the Pedal Heads **(Fig. 3, (Ref. # 3))** are replaceable.

10. Footrest

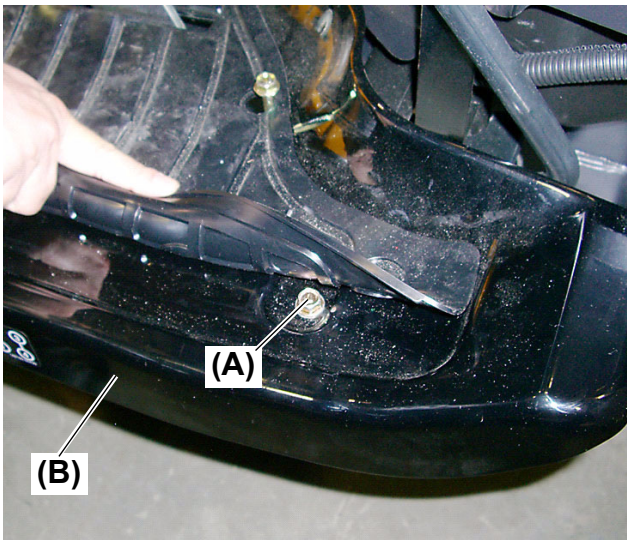

Fig. 1

(A) Bolt M8 × 20 mm (L: 0.8 in.)
(B) Front step stay

1. Remove the ten (10) cushion fasteners that secure the step sheet (rubber mat) to the step.

2. Remove the two (2) M8 × 20 mm (L: 0.8 in.) bolts **(Fig. 1, (A))** that secure the step to the right front step stay **(Fig. 1, (B))**.

3. Remove the two (2) M8 × 20 mm (L: 0.8 in.) bolts **(Fig. 1, (A))** that secure the step to the left front step stay **(Fig. 1, (B))**.

■ Footrest

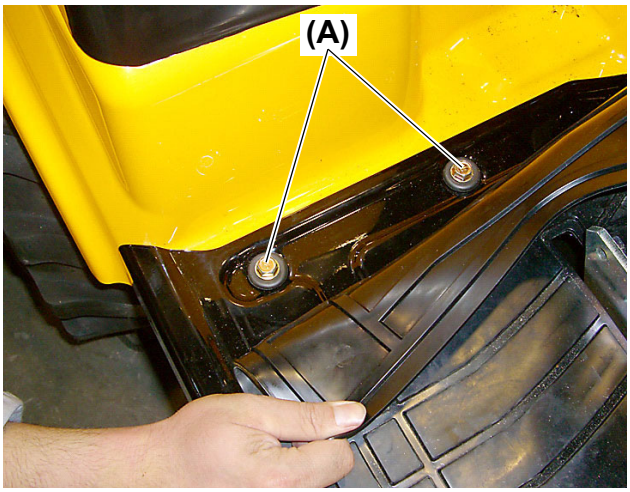

Fig. 2

(A) Bolt M8 × 20 mm (L: 0.8 in.)

4. Remove the two (2) M8 × 20 mm (L: 0.8 in.) bolts **(Fig. 2, (A))** that secure the step to the right rear step stay.

5. Remove the two (2) M8 × 20 mm (L: 0.8 in.) bolts **(Fig. 2, (A))** that secure the step to the left rear step stay.

■ Footrest

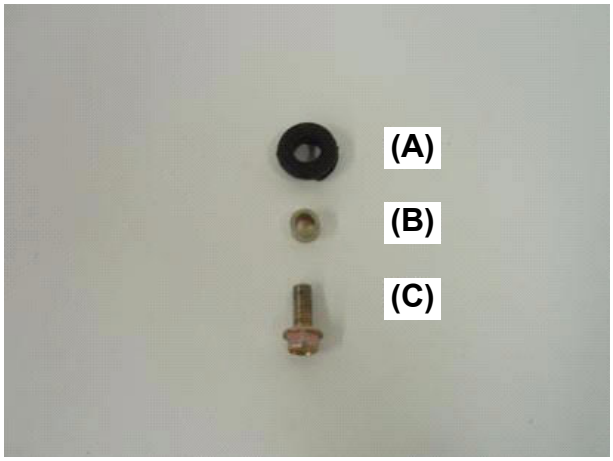

Fig. 3

(A) Cap
(B) Spacer
(C) Bolt

6. The step is cushioned from vibration by four (4) caps (isolator bushings) **(Fig. 3, (A))** with spacers **(Fig. 3, (B))**. These caps (isolator bushings) are utilized on the left and right rear step stays.

■ Footrest



Fig. 4

NOTE:

●The step sheet has been fixed to the footrest with the plastic cushion fasteners.

■ Footrest

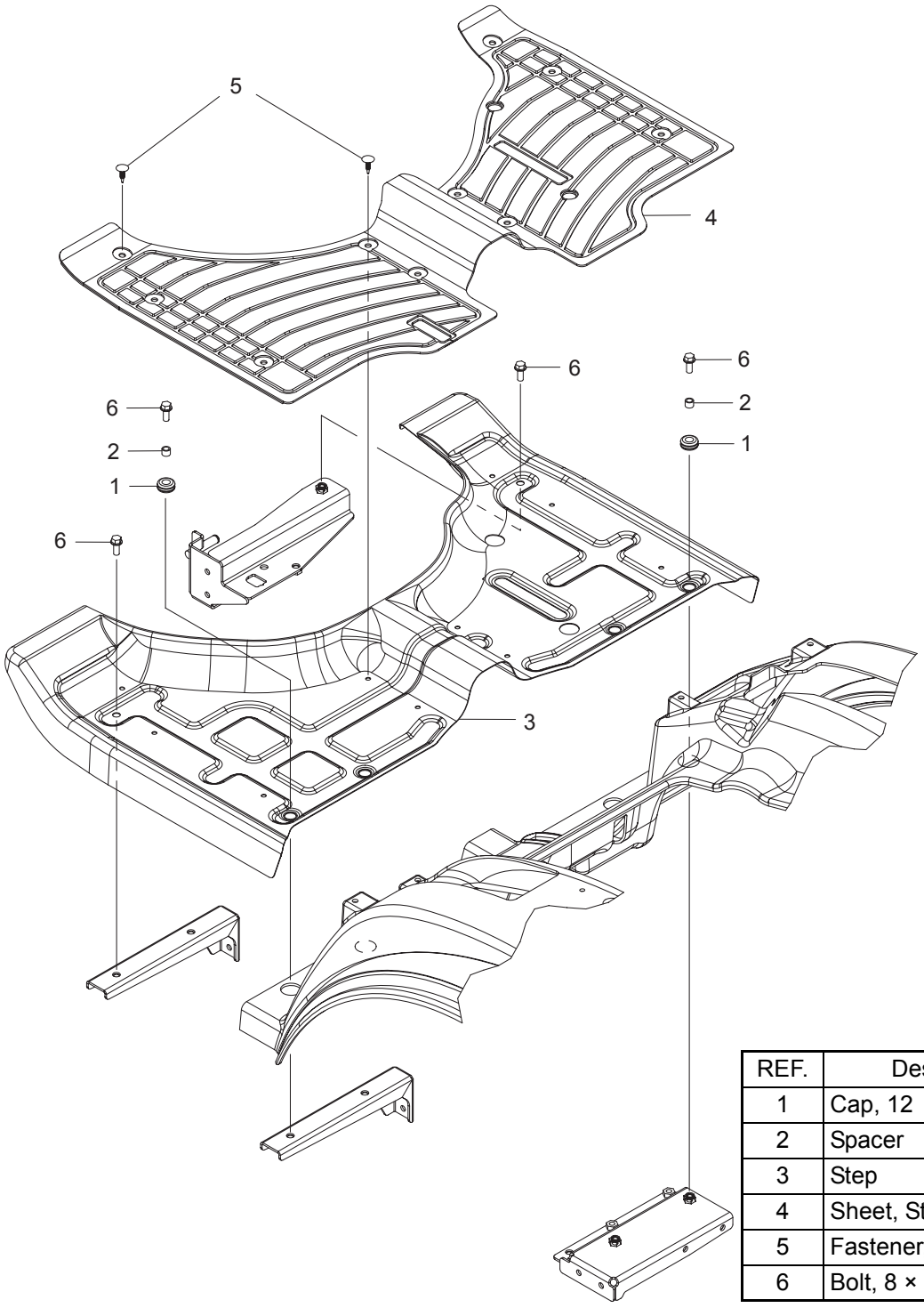

REF.	Description	Q'TY.
1	Cap, 12	4
2	Spacer	4
3	Step	1
4	Sheet, Step	1
5	Fastener, Cushion	10
6	Bolt, 8 × 20 (L: 0.8 in.)	6

Fig. 5

11. Fender Disassembly

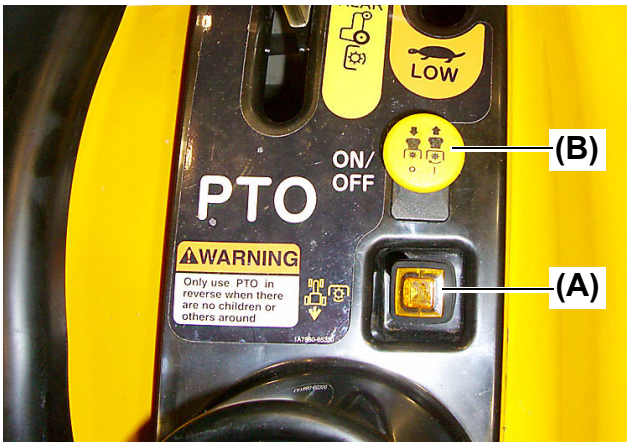

Fig. 1

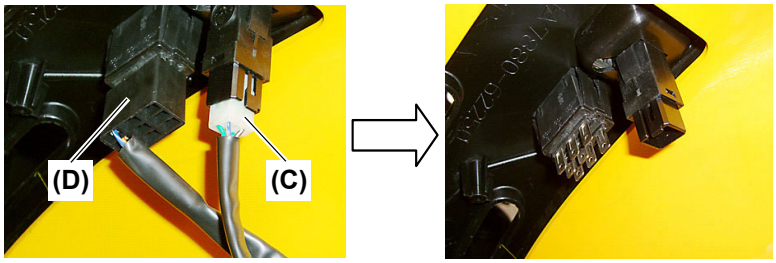

Fig. 2

(A) Reverse - override - switch
(B) Power Take Off (PTO) switch
(C) Wire harness connector for reverse-override
(D) Wire harness connector for Power Take Off (PTO) switch

NOTE:

●Remove the step before performing the procedure described below.

1. To disconnect the reverse-override and Power Take Off (PTO) switch, the left rear wheel needs to be removed to access the switches under the left rear fender.

2. Disconnect the wire harness connector **(Fig. 2, (C))** from the reverse-override switch **(Fig. 1, (A))**.

3. Disconnect the wire harness connector **(Fig. 2, (D))** from the Power Take Off (PTO) switch **(Fig. 1, (B))**.

* Photo to the right **(Fig. 2)** shows the connectors are disconnected from the switches.

■ Fender

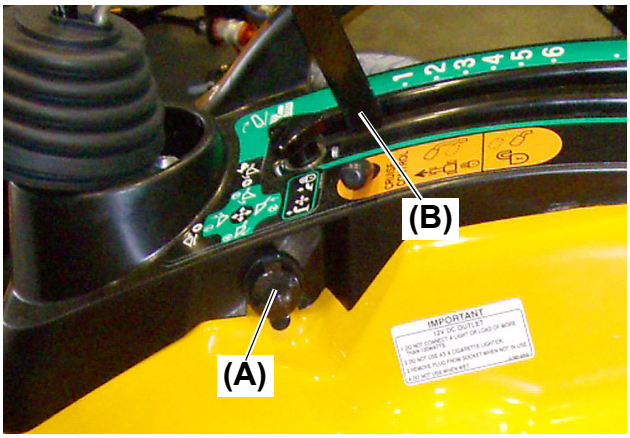

Fig. 3

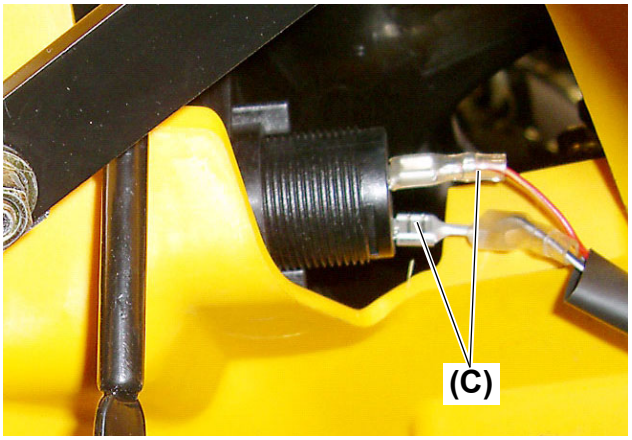

Fig. 4

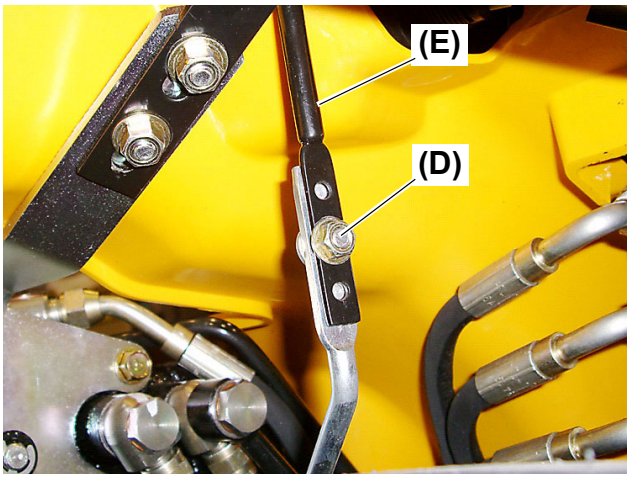

Fig. 5

(A) 12V DC outlet
(B) Cruise control lever
(C) 12V DC outlet connector
(D) Nut M6
(E) Cruise rod

4. Disconnect the two (2) wires from wire harness to the 12V DC outlet connector **(Fig. 4, (C))**.

5. Remove the M6 nut **(Fig. 5, (D))** that secures the cruise control lever **(Fig. 3, (B))** to cruise rod "B" **(Fig. 5, (E))**. The cruise rod "B" has a weldment stud and two (2) locating pins. The cruise control lever **(Fig. 3, (B))** has three (3) holes.

■ Fender

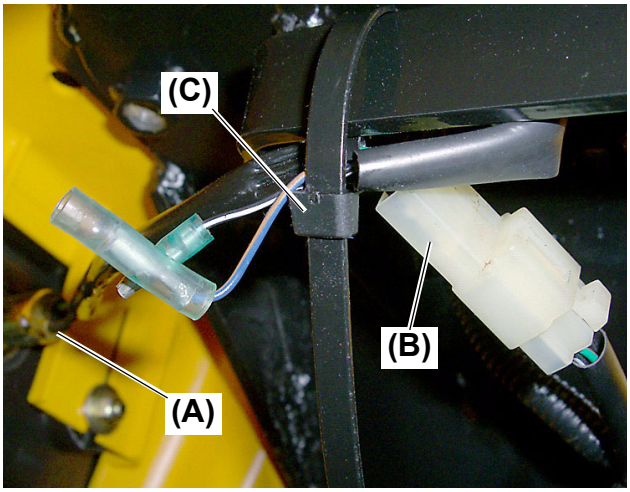

Fig. 6

(A) Tail light
(B) Tail light wire lead connector
(C) Adjustable tie strap

6. Disconnect the tail light wire lead connector **(Fig. 6, (B))** from the main harness connector.

7. Loosen the adjustable tie strap **(Fig. 6, (C))** to separate the tail light wire lead from the tractor.

■ Fender

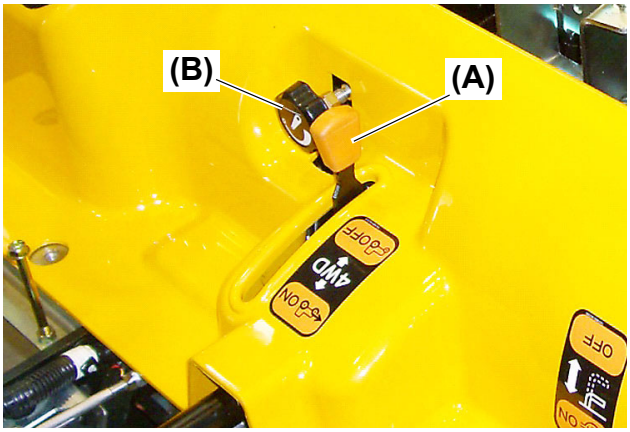

Fig. 7

(A) 4-Wheel drive lever knob
(B) Hydraulic flow control / stop valve knob

8. Remove the 4-wheel drive lever yellow knob **(Fig. 7, (A))** from the 4WD lever.

9. Remove the hydraulic flow control / stop knob **(Fig. 7, (B))** from the control valve by loosening the jam nut, then unthreading it from the flow control shaft.

■ Fender

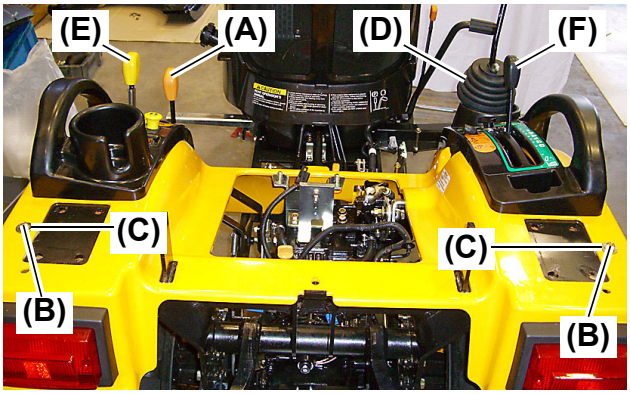

Fig. 8

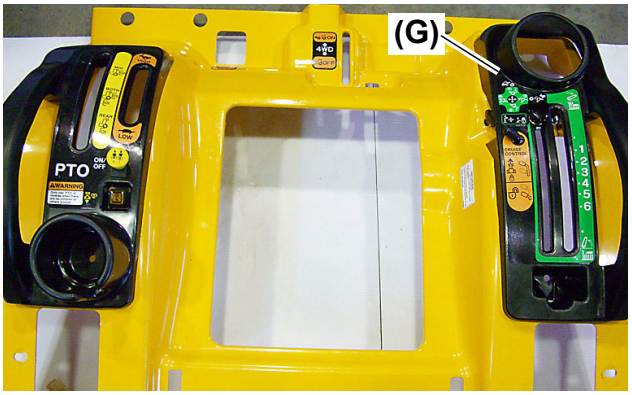

Fig. 9

(A) Range shift lever knob
(B) Bolt M80 × 30 mm (L: 1.2 in.)
(C) Washer
(D) implement control valve lever boot
(E) Mid- / Rear-Power Take Off (PTO) select lever knob
(F) 3-point hitch control / cutting height adjustment lever knob
(G) Right slide lever guide

10. Remove the orange lever knob **(Fig. 8, (A))** from the range shift lever.

11. Remove the yellow lever knob **(Fig. 8, (E))** from the mid- / rear-Power Take Off (PTO) select lever.

12. Remove the black lever knob **(Fig. 8, (F))** from 3-point hitch control / cutting height adjustment lever.

13. Remove the implement control valve lever boot **(Fig. 8, (D))** from the right side lever guide **(Fig. 9, (G))**.

14. Remove the two (2) M8 × 30 mm (L: 1.2 in.) bolts **(Fig. 8, (B))** and washers **(Fig. 8, (C))** that secure the fender assembly to the lower frame.

NOTE:

●Make sure to remove the implement control valve lever boot **(Fig. 8, (D))** before separating the fender.

15. Using two (2) people, carefully lift the fender assembly from the tractor. Place the fender assembly in an out-of-the-way location to prevent damage.

*Photo **(Fig. 9)** shows the state after separation of the fenders from the tractor.

■ Fender

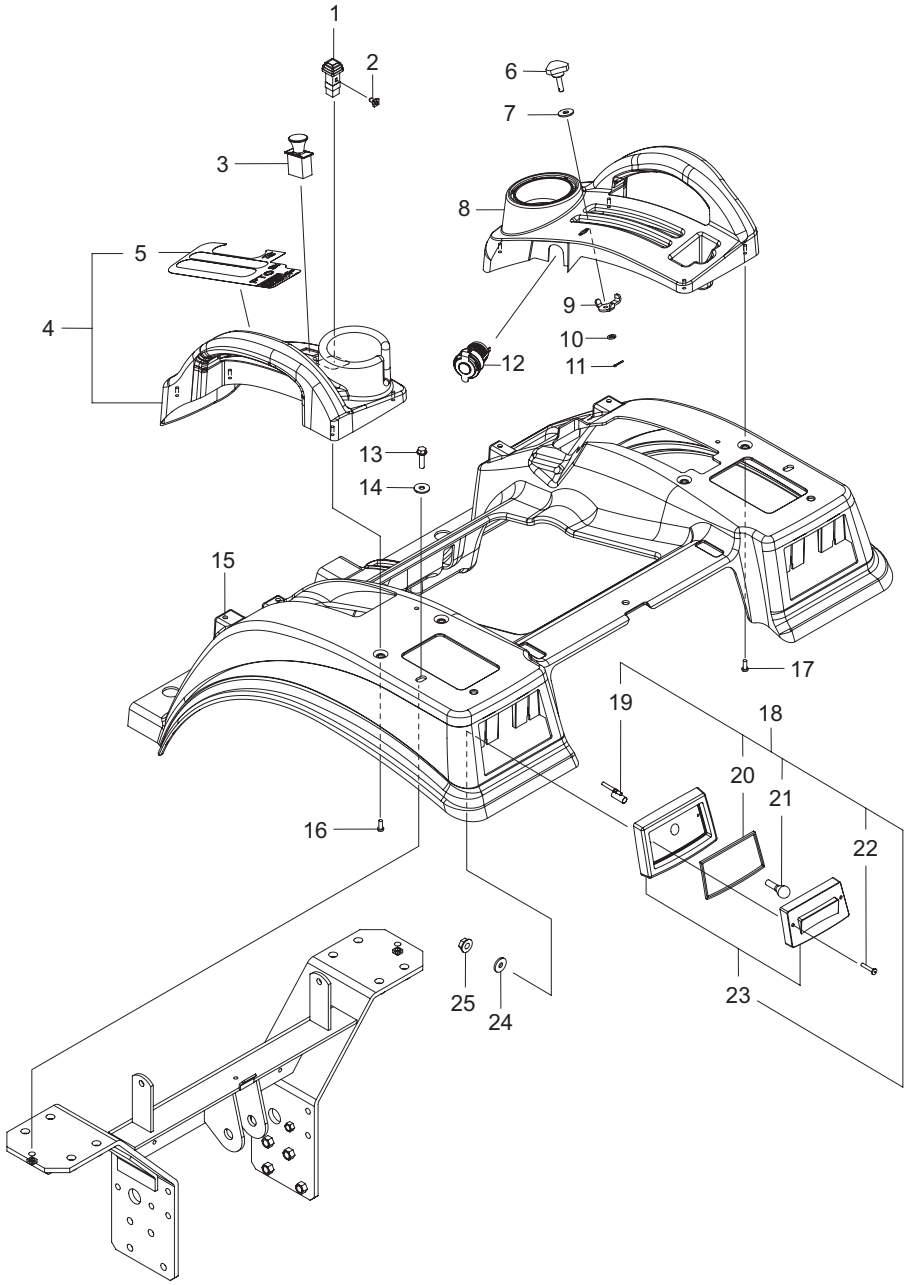

Fig. 10

REF.	Description	Q'TY.
1	Switch NL (Y	1
2	Lamp ASSY.	1
3	PTO, Switch	1
4	Guide M ASSY, Lever L	1
5	Label, Leverguide L	1
6	Knob, HYD. Control	1
7	Washer, 8	1
8	Guide, Lever R	1
9	Stopper, HYD. Control	1
10	Spring	1
11	Pin, 2.0 × 16	1
12	DC Power Outlet	1
13	Bolt, 8 × 30 (L: 1.2 in.)	2

REF.	Description	Q'TY.
14	Washer, 8	2
15	Fender	1
16	Screw, 6.0 × 16	4
17	Screw, 6.0 × 16	4
18	Lamp,Tail	2
19	Housing Semi ASSY.	2
20	Gasket	2
21	Bulb 12V-21/5W	2
22	Screw, M6 × 32 (L: 1.28 in.)	4
23	Lens ASSY.	2
24	Washer, 6	4
25	Nut, M6	4

12. Front Tire

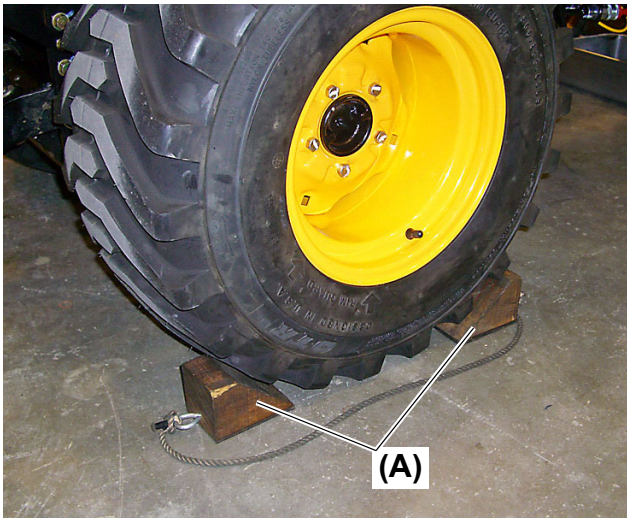

Fig. 1

(A) Wheel chock

1. Chock **(Fig. 1, (A))** the rear tire to prevent accidental movement of unit.

⚠ WARNING

- **Engage the parking brake and chock the rear tires so as to prevent the tractor from moving back and forth during repair.**

■ Front Tire

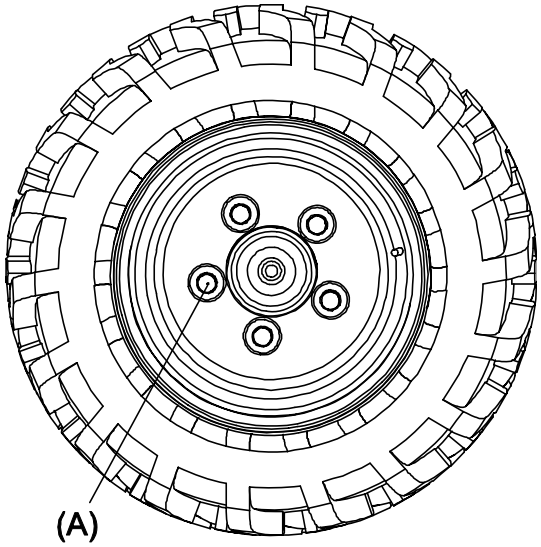

Fig. 2

(A) 7/16-20 UNF mounting bolts

2. Loosen the five (5) 7/16-20 UNF bolts **(Fig. 2, (A))** per front wheel if removing wheel.

⚠ WARNING

●Set a jack under the tractor before loosening the bolts. Do not remove the bolts.

■ Front Tire

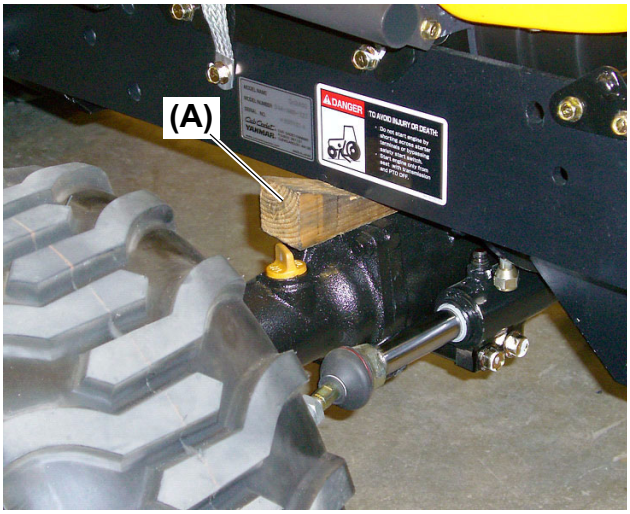

Fig. 3

(A) Wedge

3. Insert wedge **(Fig. 3, (A))** between front axle and frame to prevent front axle from pivoting up and down and frame from tilting side to side.

⚠ CAUTION

●Insufficient insertion of the wedge may cause the front axle to swing during working.

■ Front Tire



Fig. 4

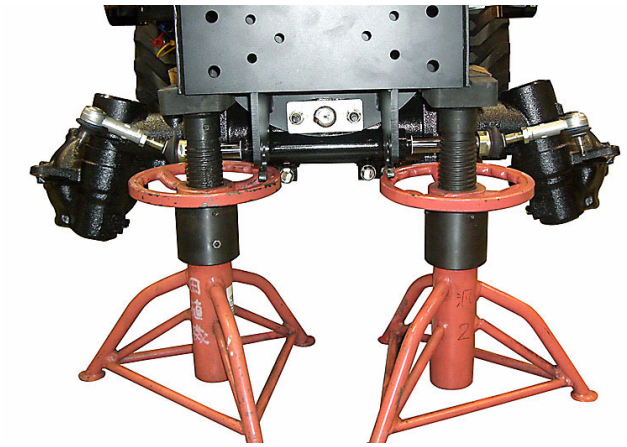

Fig. 5

4. Jack the front of the tractor up using the front weight bracket as a lifting point, if attached. If weight bracket is not attached use the front frame of the tractor.

5. Location of the jack stands will depend on the repair, place jack stands under the frame at an equal distance apart.

6. Jack up the front weight hitch section or lift it with a hoist crane, etc.

IMPORTANT

●When lifting with the hoist crane, etc., be careful not to contact its sling with the engine hood.

■ Front Tire



Fig. 6

7. Set the rigid stands, etc. on the front weight hitch section and then lower unit to safely rest on stands.

■ Front Tire

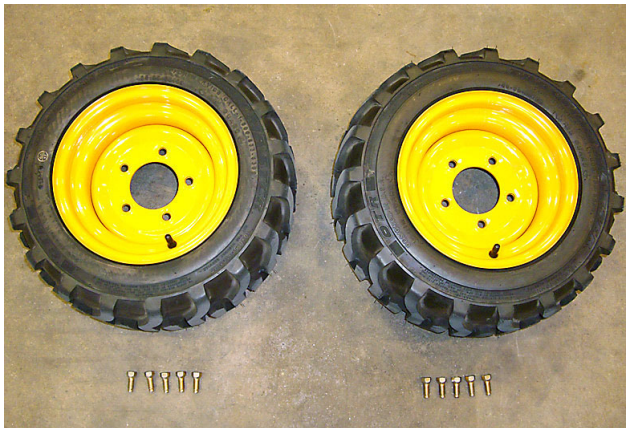

Fig. 7

* Photo **(Fig. 7)** shows the removed front tires.

8. Remove the five (5) 7/16-20 UNF mounting bolts and remove the front tire. (This should be applied to the right and left sides.)

■ Front Tire

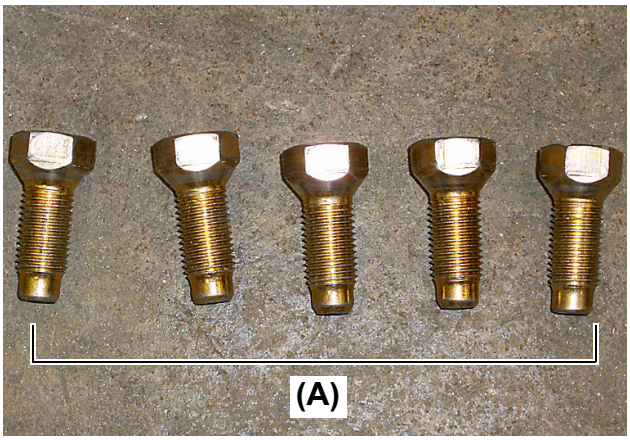

Fig. 8

(A) 7/16-20 UNF mounting bolts

9. Clean bolts free of any dirt or oil residue.

10. Install the 7/16 - 20 UNF bolts **(Fig. 8, (A))** and torque to 51.6 to 59.0 ft•lbs (70 to 80 N•m).

IMPORTANT

- Any damaged bolt should be replaced with new one.

13. Rear Tire

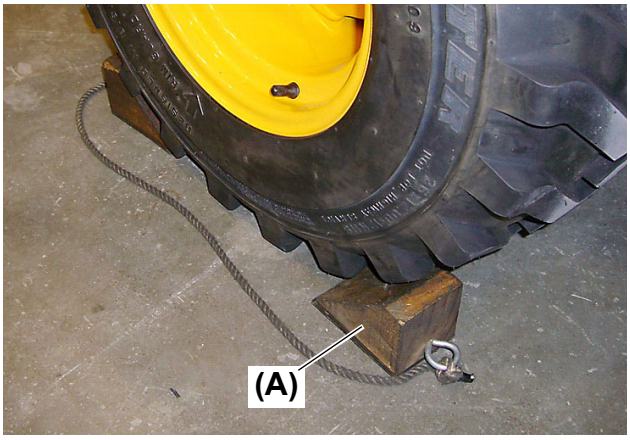

Fig. 1

(A) Wheel chock

1. Chock **(Fig. 1, (A))** the front tire to prevent accidental movement of the unit.

⚠ WARNING

- **In order to prevent the tractor from moving back and forth during working, engage the parking brake and chock the front tires.**

■ Rear Tire

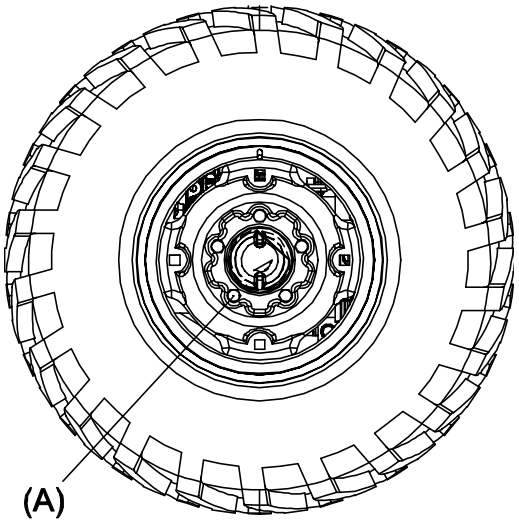

Fig. 2

(A) 7/16-20 UNF mounting bolts

2. Loosen the five (5) 7/16 - 20 UNF wheel bolts **(Fig. 2, (A))**.

⚠ WARNING

●Set a jack under the tractor before loosening the bolts. Do not remove the bolts.

■ Rear Tire

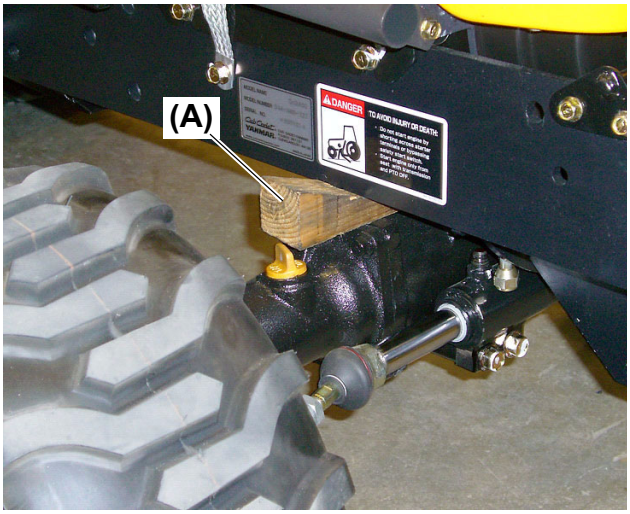

Fig. 3

(A) Wedge

3. Insert a wedge **(Fig. 3, (A))** between front axle and frame. This will stabilize the frame and prevent it from tilting side to side.

⚠ CAUTION

●Insufficient insertion of the wedge may cause the front axle to swing during working.

■ Rear Tire

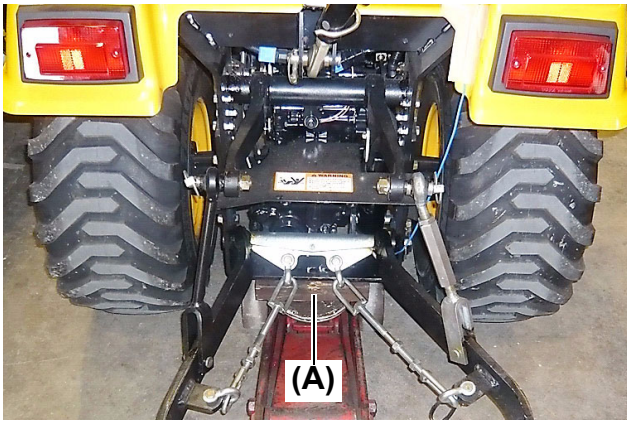

Fig. 4

(A) Position to be jacked up

4. Jack up the rear of the tractor high enough to place jack stands under the frame.

NOTE:

●Do not use the transmission housing as a lift point since damage may occur. Lift from the lower frame structure.

■ Rear Tire

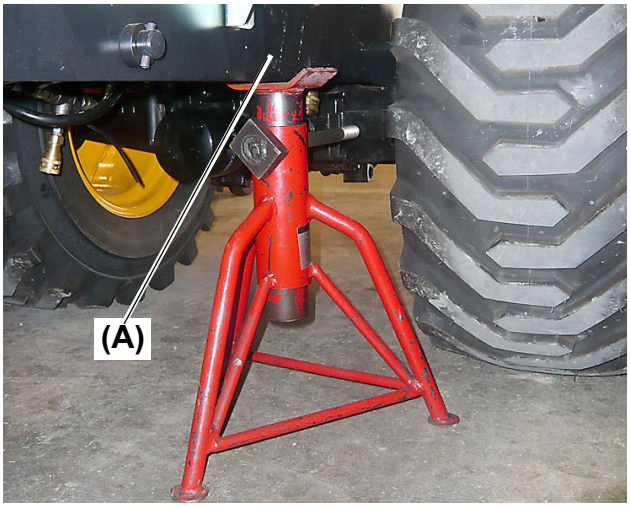

Fig. 5

(A) Main frame rail

5. Place jack stands in front of the rear tires under the main frame rail **(Fig. 5, (A))**.

⚠WARNING

●When setting, be careful not to contact the jack stands with the tires.

■ Rear Tire

6. Lower the unit to rest safely on the stands.

■ Rear Tire

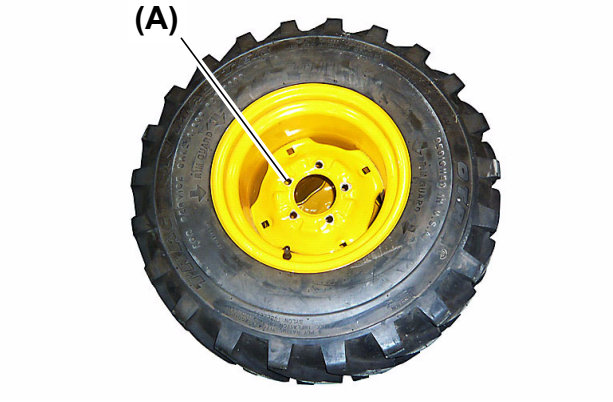

Fig. 6

(A) 7/16-20 UNF wheel bolts

7. Remove the five (5) 7/16 - 20 UNF wheel bolts **(Fig. 6, (A))**.

8. Remove the tire / wheel assembly.

⚠ CAUTION

●The rear tire / wheel assemblies are heavy and unstable. Be careful when removing them.

■ Rear Tire

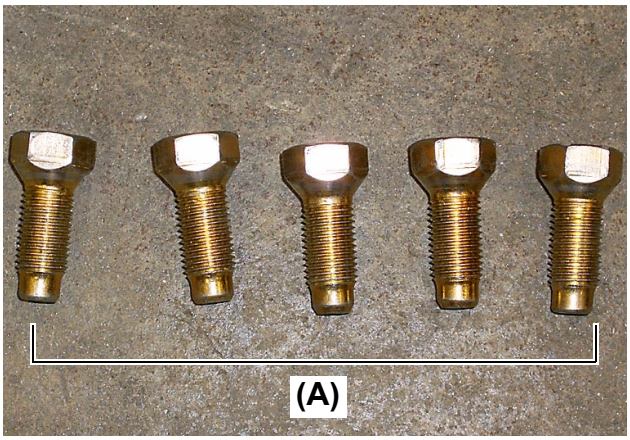

Fig. 7

(A) 7/16-20 UNF mounting bolts

9. Clean bolts free of any dirt or oil residue.

10. Install the 7/16 - 20 UNF bolts **(Fig. 7, (A))** and torque to 51.6 to 59.0 ft•lbs (70 to 80 N•m).

IMPORTANT

- Any damaged bolt should be replaced with new one.

14. Power Steering (PST) Cylinder

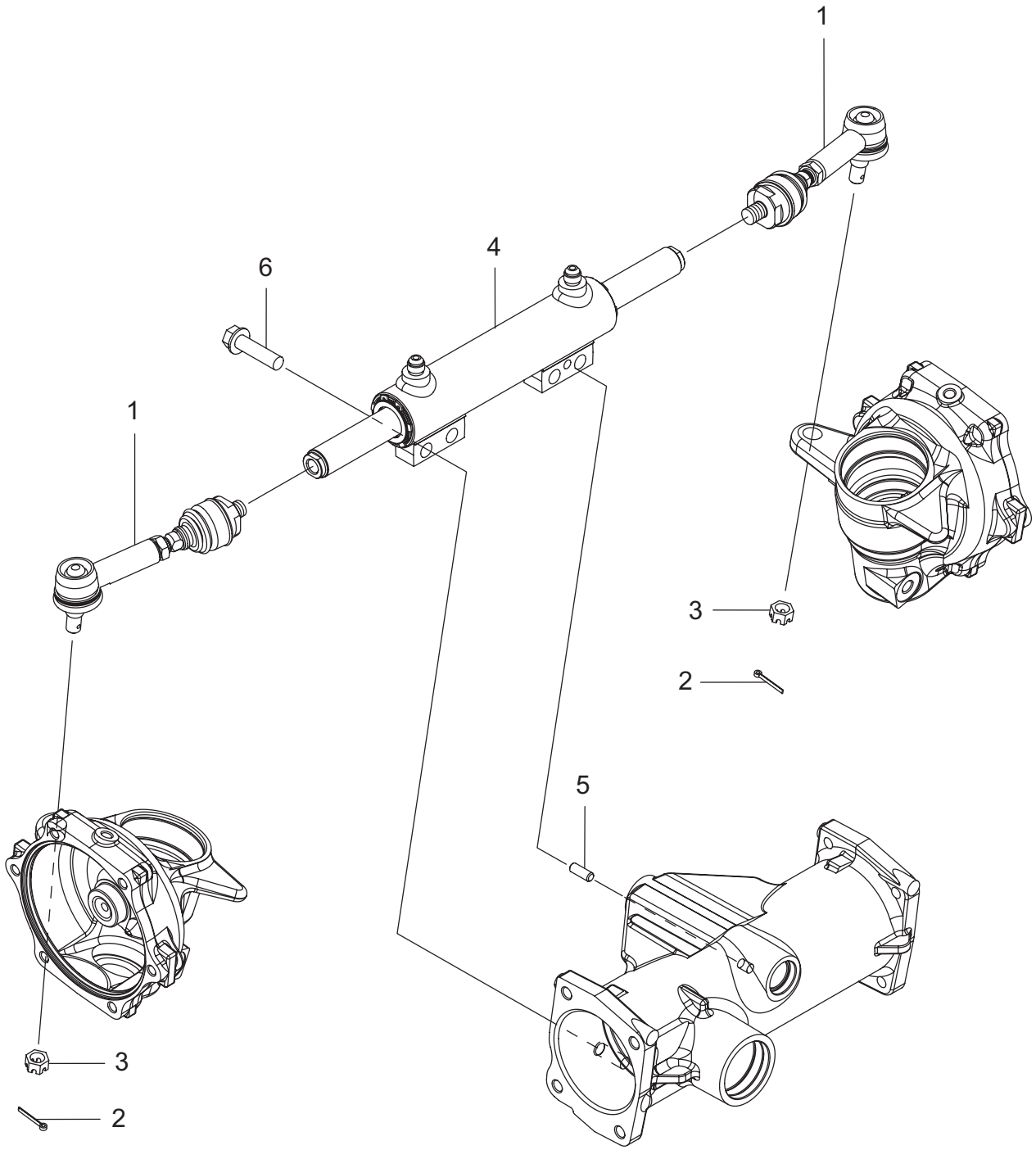

Fig. 1

REF.	Description	Q'TY.
1	Tie Rod 132 ASSY.	2
2	Cotter Pin, 3.2 × 25	2
3	Nut, 12	2
4	Power Cylinder ASSY.	1
5	Pin, 8 × 20	1
6	Bolt, 12 × 45 (L: 1.8 in.)	4

■ Power Steering (PST) Cylinder

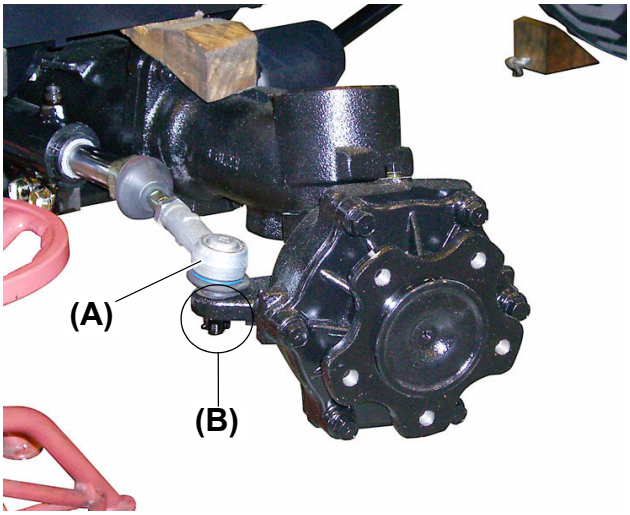

Fig. 2

(A) Tie rod
(B) Castle nut

1. Remove the cotter pin from the castle nut **(Fig. 2, (B))**.

2. Remove the castle nut.

3. Repeat for opposite side.

(Remove the 1/8 × 1 in. (3.2 × 25 mm) cotter pin and M12 castle nut **(Fig. 2, (B))** that connects the tie rod **(Fig. 2, (A))** to the front axle. (This should be applied to the right and left sides.))

■ Power Steering (PST) Cylinder

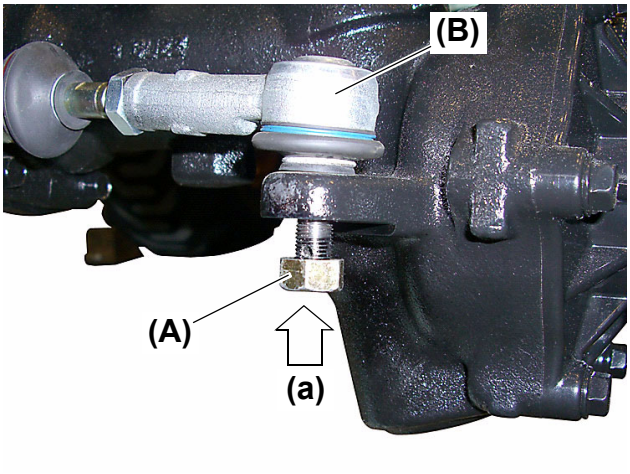

Fig. 3

(A) M12 thread nut
(B) Tie rod
(a) Tapping direction

4. Tap the nut **(Fig. 3, (A))** of the tie rod **(Fig. 3, (B))** with a hammer.

NOTE:

- To make sure that hammering the bolt of the tie rod **(Fig. 3, (B))** does not damage its threads, remove the M12 castle nut and screw a common M12 nut onto the bolt of the tie rod **(Fig. 3, (B))** only a few turns, and then tap the common M12 nut with the hammer.
- Do not allow any threads to be exposed from the nut.

5. Remove the tie rod **(Fig. 3, (B))**.

IMPORTANT

- Do not use the M12 castle nut. If used, it may be broken.
- The nut has a fine pitch thread.

■ Power Steering (PST) Cylinder

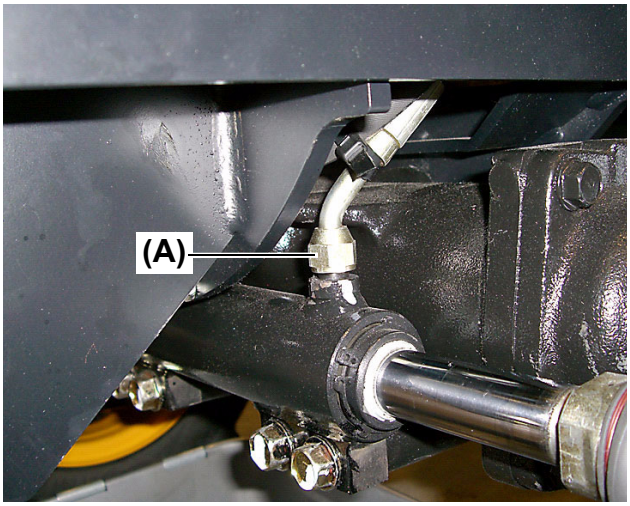

Fig. 4

(A) Hydraulic hose
(B) Installation angle: 25 ± 5 degrees

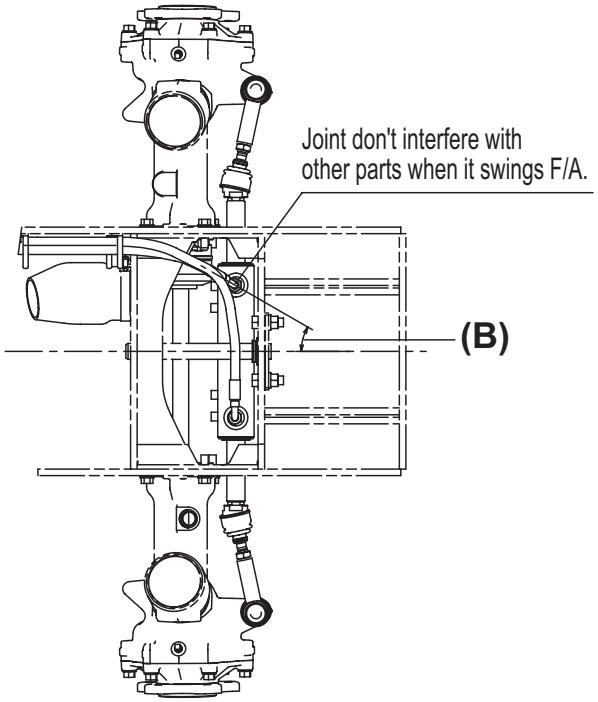

Fig. 5

6. Place a drain pan under the front axle to catch any fluid from the Power Steering (PST) cylinder.

7. Disconnect the left power steering hose **(Fig. 4, (A))**.

8. Disconnect the right power steering hose.

NOTE:

●Tightening torque for assembling: 26.0 to 31.8 ft•lbs (35.3 to 43.1 N•m)

IMPORTANT

●Place an oil pan on the floor in advance since oil flows out from the hydraulic hose and the power steering cylinder.
●When installing the hydraulic oil, be careful of its installation angle **(Fig. 5, (B))**.

■ Power Steering (PST) Cylinder

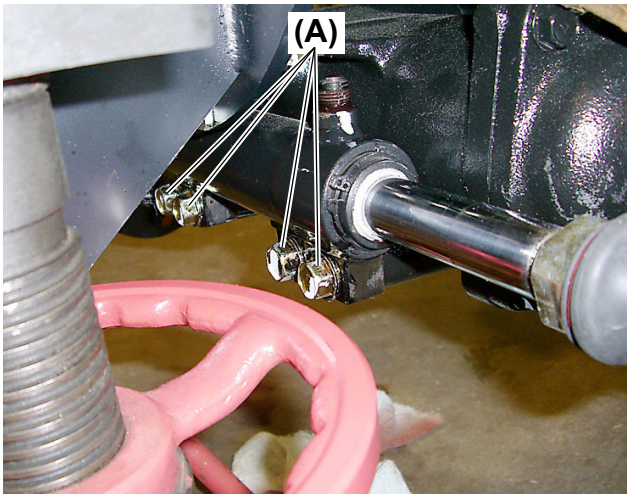

Fig. 6

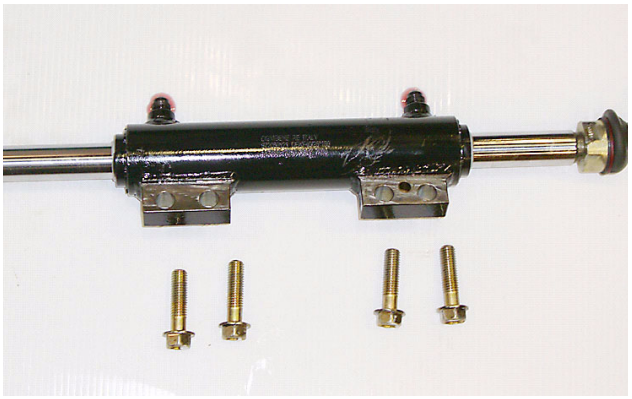

Fig. 7

(A) Bolt M12 × 45 mm (L: 1.8 in.)

* Photo **(Fig. 7)** shows the removed power steering cylinder.

9. Remove the four (4) M12 × 45 mm (L: 1.8 in.) **(Fig. 6, (A))** flange head bolts that secure the Power Steering (PST) cylinder to the front axle housing.

10. Remove the Power Steering (PST) cylinder and set in a drain pan to catch any fluid.

■ Power Steering (PST) Cylinder

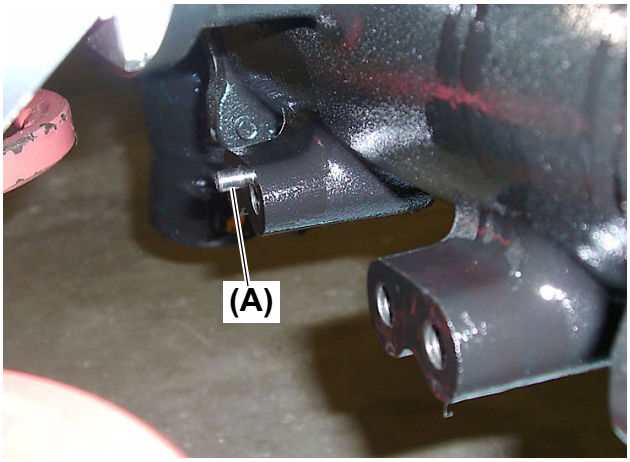

Fig. 8

(A) Knock pin

11. The Power Steering (PST) cylinder has an 8 × 20 mm (L: 0.8 in.) alignment pin **(Fig. 8, (A))** on the right hand side mounting boss above and between the two (2) mounting bolts.

NOTE:

- When installing Power Steering (PST) cylinder put a thin film of anti-seize on the alignment pin. Be careful. Not to get any anti-seize into the mounting bolt holes.

■ Power Steering (PST) Cylinder

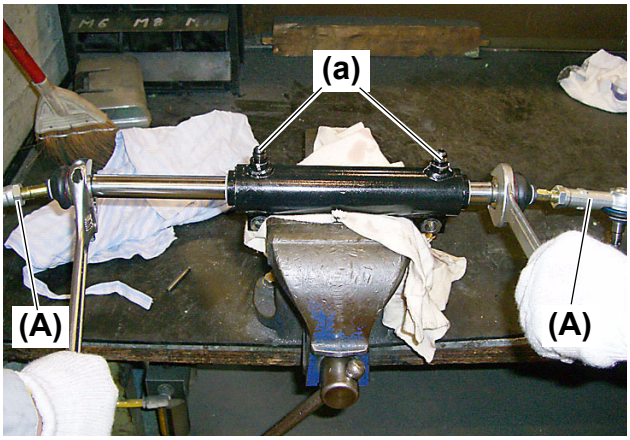

Fig. 9

(A) Tie rod

12. Wrap the Power Steering (PST) cylinder in a shop towel and place the Power Steering (PST) cylinder in a soft jawed shop vise with the fittings on the top side. This will allow the vise to catch the mounting bosses in the vise jaws. Tighten securely to keep cylinder from turning, Do Not over tighten to cause damage to the cylinder.

13. Using two (2) open end wrenches or adjustable wrenches, remove the tie rod assemblies **(Fig. 9, (A))** from the Power Steering (PST) cylinder.

⚠ CAUTION

- **Since Locktite has been applied to the threaded portion of the tie rod, removal of the tie rod is difficult. For its removal, securely fix the Power Steering (PST) cylinder.**
- **If the Power Steering (PST) cylinder rod moves, internal oil exits out from the fittings (Fig. 9, (a)). So, wear safety goggles during working.**

■ Power Steering (PST) Cylinder

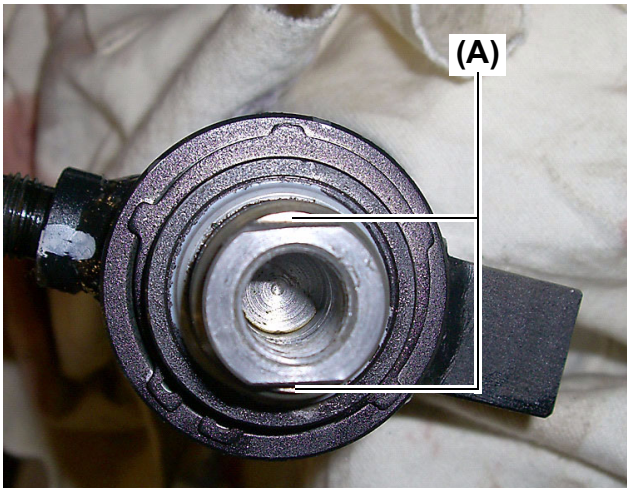

Fig. 10

(A) Width across flat portions at the end of the cylinder rod

14. The cylinder rod has two (2) flat ends **(Fig. 10, (A))** as shown above. Once one of the tie rod assemblies has been removed, the flats on the end of the cylinder rod is used to retain the cylinder rod to remove the opposite tie rod.

15. The installation process is in reverse order.

NOTE:

- When removing another tie rod, utilize the width across flat portions at the end of the removed cylinder rod.
- The **Fig. 10, (A)** portions have narrow space for tool engagement, resulting in easy disengagement of the tool. Be careful of this matter when working.

■ Power Steering (PST) Cylinder

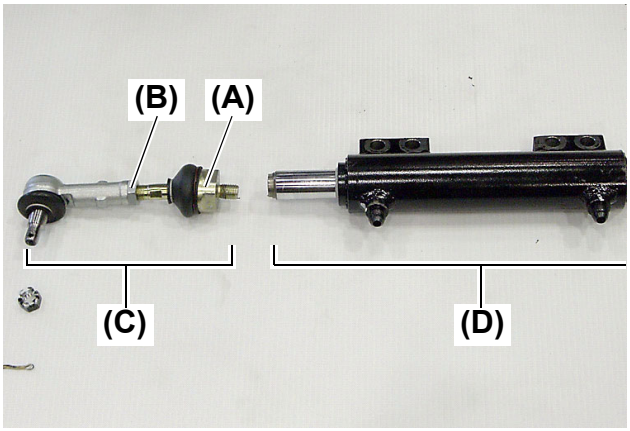

Fig. 11

(A) Widge across flat portion
(B) Nut
(C) Tie rod
(D) Power steering cylinder

16. When installing or replacing the tie rod assemblies torque the tie rod assembly to the cylinder rod to 43.5 to 50.9 ft•lbs (59 to 69 N•m).

17. Apply locktite to the **(Fig. 11, (A))** portion when fitting the tie rod to the power steering cylinder. (This should be applied to the right and left sides.)

NOTE:

- Loctite: ThreeBond 1401 or equivalent
- Tightening torque for **(Fig. 11, (A))** and **(Fig. 11, (B))**: 43.5 to 50.9 ft•lbs (59 to 69 N•m)
- Each of the tie rod **(Fig. 11, (C))** and the power steering cylinder **(Fig. 11, (D))** is supplied in an assembly. Independent supply of its internal parts cannot be offered.

■ Power Steering (PST) Cylinder

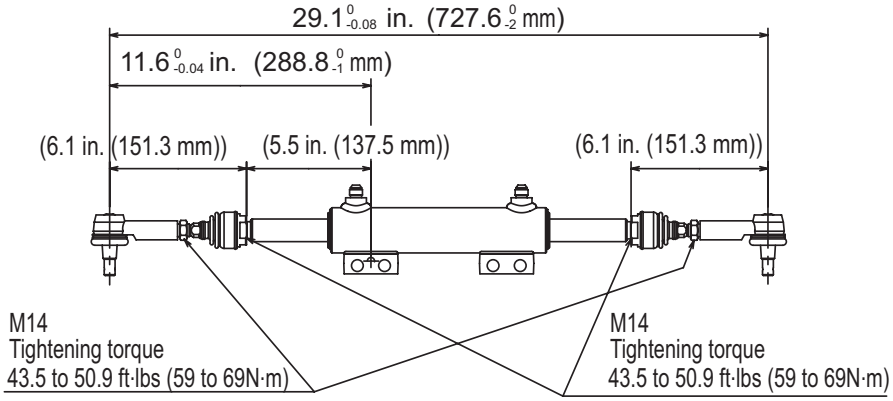

Fig. 12

18.After adjustment, fit the tie rod to the front axle in reference to the dimensions of **Fig. 12**:

■ Power Steering (PST) Cylinder

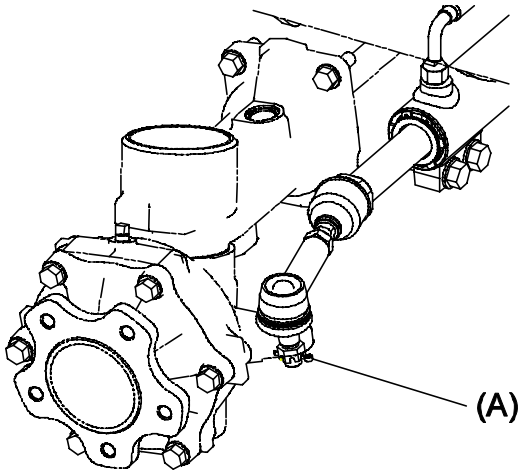

Fig. 13

(A) Castle Nut

19. Install the tie rod end into the arm of the front gear box.

20. Install castle nut **(Fig. 13, (A))** and torque to 43.5 to 50.9 ft•lbs. (59 to 69 N•m).

21. Install a new cotter pin.

IMPORTANT

- Before installing the nut, remove any oil and/or dirt on the portion where the tie rod is installed to the front axle.

22. Installation of power steering cylinder to the front axle is the reverse of removal. During installation, see page 10-76 **(Fig. 8, (A))** for information about the alignment pin.

15. Front Drive Shaft

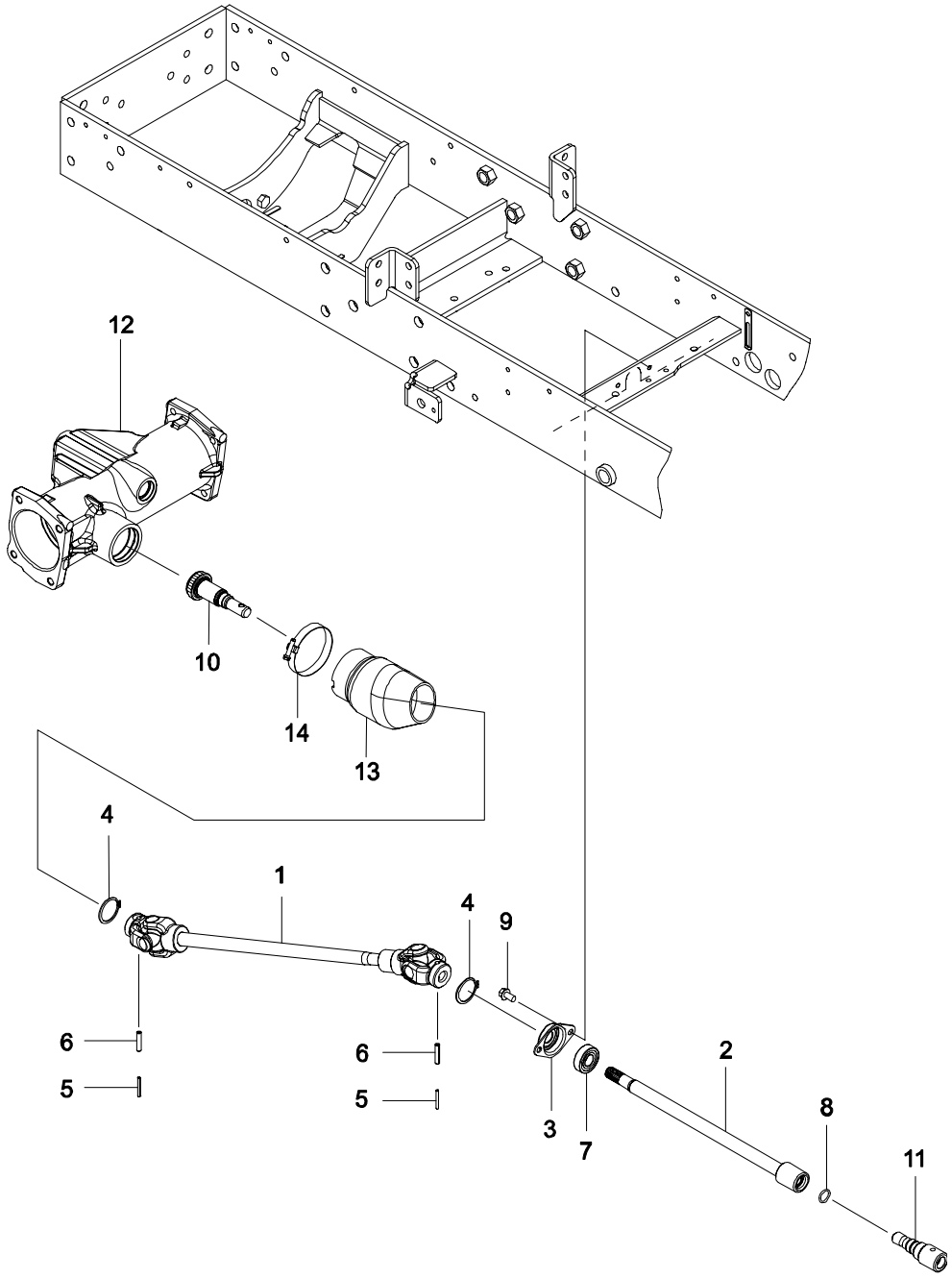

Fig. 1

REF.	Description	Q'TY.
1	Shaft, PROP. F	1
2	Shaft, PROP. R	1
3	Retainer 40,Bearing	1
4	Ring, 36	2
5	Pin, 3.5A × 32	2
6	Pin, 6.0A × 32	2
7	Bearing, 6203UU	1

REF.	Description	Q'TY.
8	Packing, P 16.0	1
9	Bolt, 8 × 16 (L: 0.64 in.)	2
10	Input Shaft	1
11	4WD Output Shaft	1
12	Front Axle Case	1
13	Cover, Shaft	1
14	Clamp, Hose 75	1

■ Front Drive Shaft

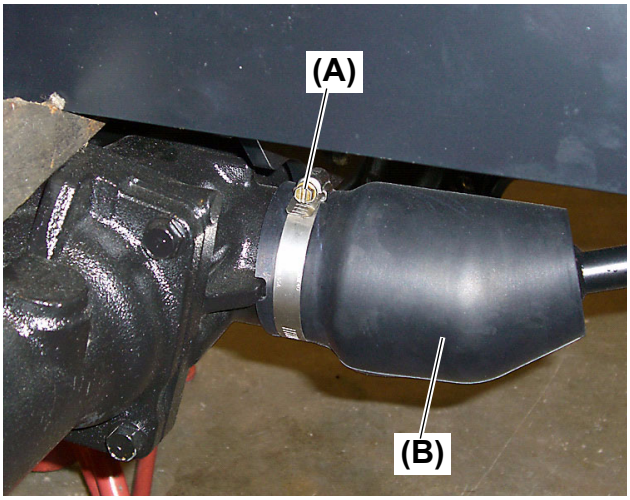

Fig. 2

(A) Hose clamp
(B) Shaft cover

1. Loosen the hose clamp **(Fig. 2, (A))**.

2. Slide the shaft cover **(Fig. 2, (B))** up the drive shaft to expose the drive shaft coupler end.

■ Front Drive Shaft

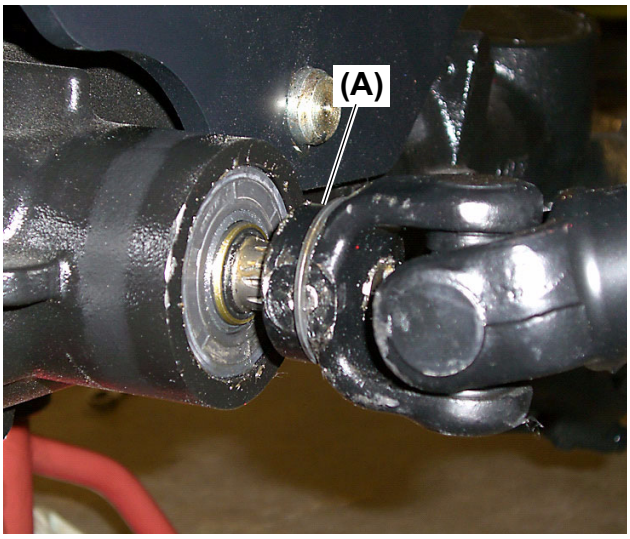

Fig. 3

(A) External snap ring

3. Remove the external snap ring **(Fig. 3, (A))** to gain access to the spring pins.

NOTE:

- When removing the snap ring, be careful not to expand or deform it.
  If expanded or deformed, it should be replaced with new one.

■ Front Drive Shaft

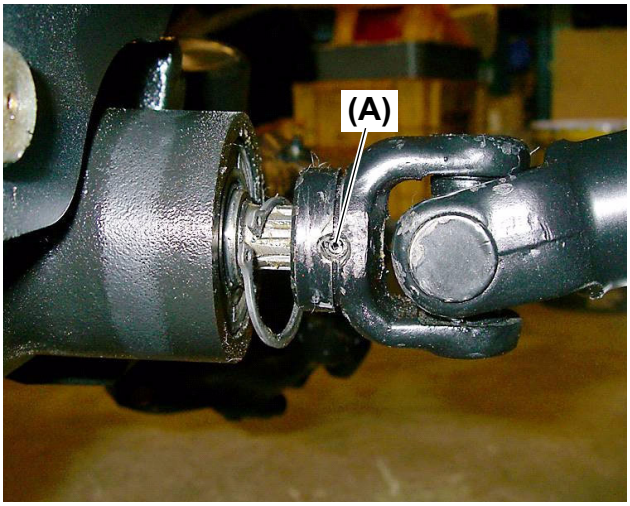

Fig. 4

(A) Spring pin

4. There are two (2) spring pins **(Fig. 4, (A))**, one inside the other.

5. Remove the spring pins using the correct size punch.

■ Front Drive Shaft

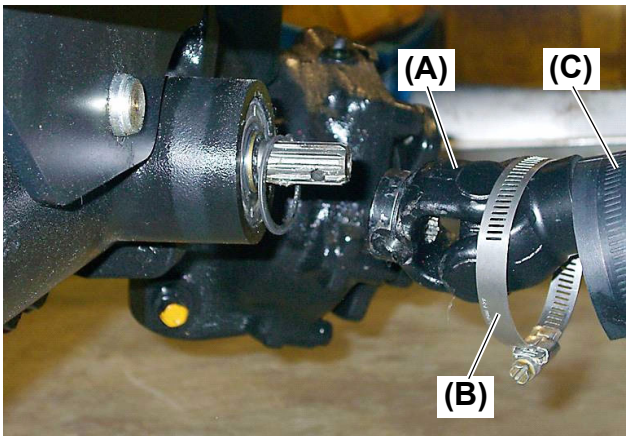

Fig. 5

(A) Front drive shaft
(B) Clamp
(C) Shaft cover

6. Remove drive shaft **(Fig. 5, (A))** from front axle shaft.

7. The hose clamp **(Fig. 5, (B))** and shaft cover **(Fig. 5, (C))** can be replaced at this time if needed.

■ Front Drive Shaft

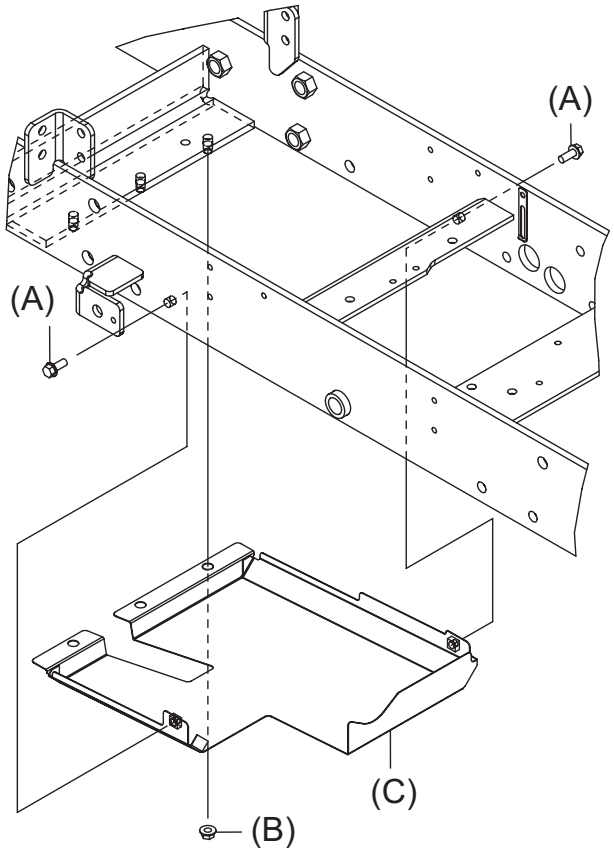

Fig. 6

(A) Bolt M8 × 20 mm (L: 0.78 in.): 2 pieces
(B) Nut M8: 3 pieces
(C) Fuel tank lower cover

8. Remove the fuel tank lower cover **(Fig. 6, (C))**.

9. The fuel tank lower cover is secured by three (3) M8 nuts **(Fig. 6, (B))** across the front, and two (2) M8 × 20 mm (L: 0.78 in.) bolts **(Fig. 6, (A))** from the lower section of the tractor.

NOTE:

●It is recommended to remove the cover first.

■ Front Drive Shaft

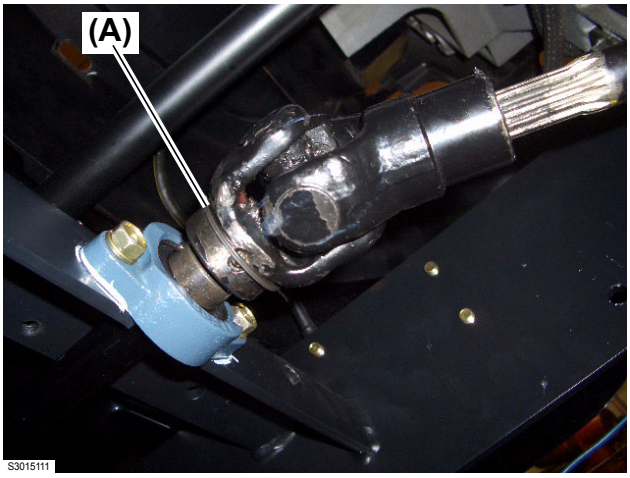

Fig. 7

(A) Circlip 36 (shaft)

10.Remove the circlip **(Fig. 7, (A))** to expose the spring pins in the front prop shaft coupler.

■ Front Drive Shaft

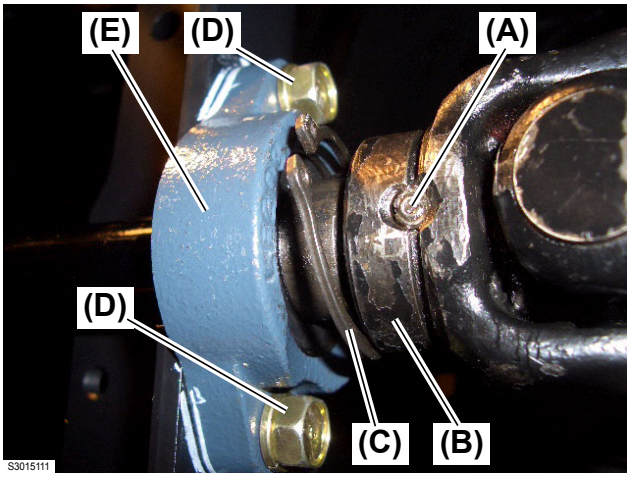

Fig. 8

(A) Spring pin
(B) Front prop shaft
(C) Circlip 36
(D) Bolt M8 × 16 mm
(E) Bearing retainer

11. Remove the spring pins **(Fig. 8, (A))** using the proper size punch.

12. Remove the front prop shaft **(Fig. 8, (B))** from the rear prop shaft.

⚠ CAUTION

●Be careful to avoid injury due to falling of the front prop shaft.

13. Remove the two (2) M8 × 16 mm (L: 0.64 in.) bolts **(Fig. 8, (D))** securing the bearing retainer **(Fig. 8, (E))** to the main frame assembly.

⚠ CAUTION

●Be careful to avoid injury from falling parts.

■ Front Drive Shaft

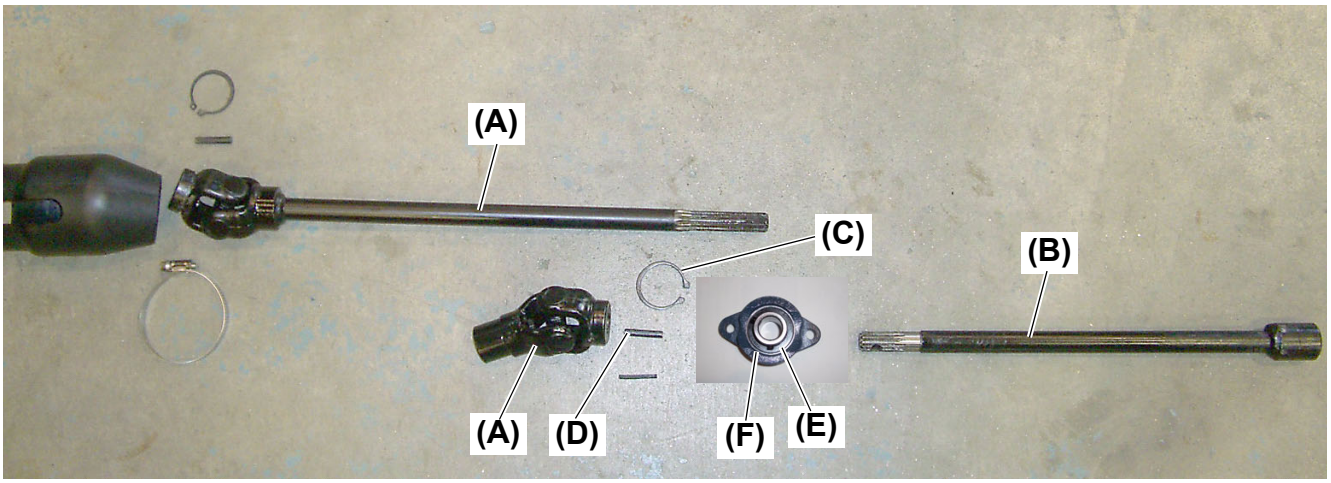

Fig. 9

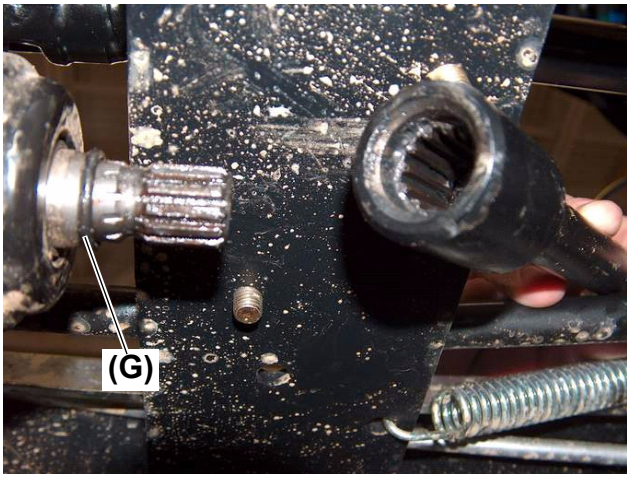

Fig. 10

(A) Front prop shaft
(B) Rear prop shaft
(C) External snap ring (Circlip 36)
(D) Spring pins
(E) Bearing
(F) Bearing retainer
(G) O-Ring (This o-ring is located on the 4WD shaft from the transmission)

14. At this time the rear prop shaft **(Fig. 9, (B))** can be removed from the 4WD output shaft. Make note of the O-ring seal on the 4WD output shaft. Replace O-ring **(Fig. 10, (G))** any time the rear prop shaft **(Fig. 9, (B))** is removed from the 4WD output shaft. During installation of O-ring **(Fig. 10, (G))** and rear prop shaft **(Fig. 9, (B))**, apply grease to the O-ring and to the splines of the 4WD output shaft as well as to the internal splines of the rear prop shaft.

■ Front Drive Shaft

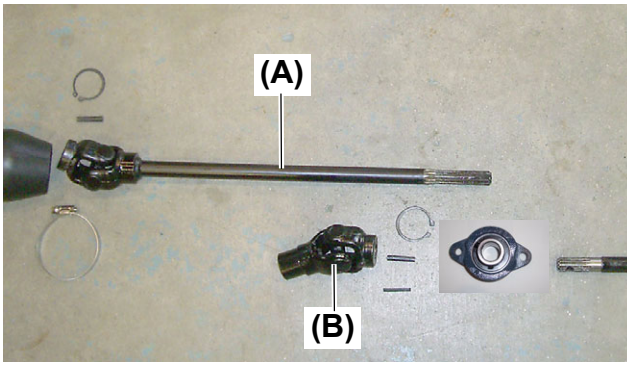

Fig. 11

15.When assembling, be careful of the following point:

(1) When assembling the parts **(Fig. 11, (A))** and **(Fig. 11, (B))** of the front drive shaft, align their matching positions.
(2) Apply grease to the O-ring seal, internal splines of the rear prop shaft and to the splines of the 4WD output shaft.

■ Front Drive Shaft



Fig. 12

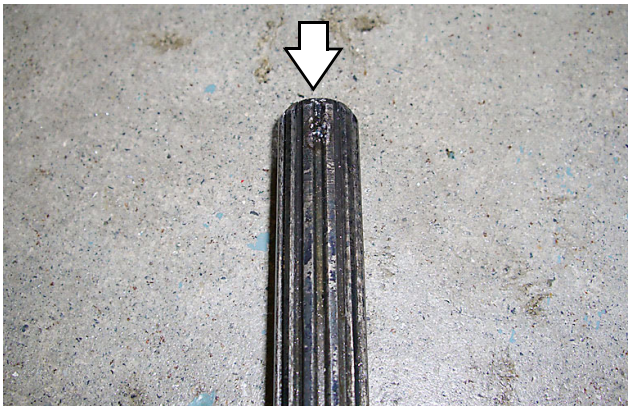

Fig. 13

(3) Coat the spline portion of the front prop shaft with Anti-sieze or grease.

NOTE:

●Before assembling, apply Alvania grease to the splined section.

(4) Replace the circlips, pins and packing with new ones.

■ Front Drive Shaft

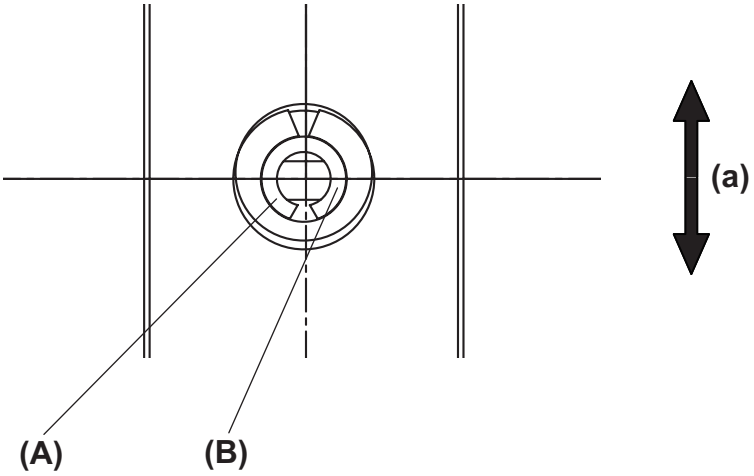

Fig. 14

(A) Inner pin
(B) Outer pin
(a) Direction of load

(5) Install each internal or external spring pin with its slit facing toward the axial direction. The slit of the internal spring pin should be positioned with a 180-degree turn from that of the external spring pin.

16. Front Axle

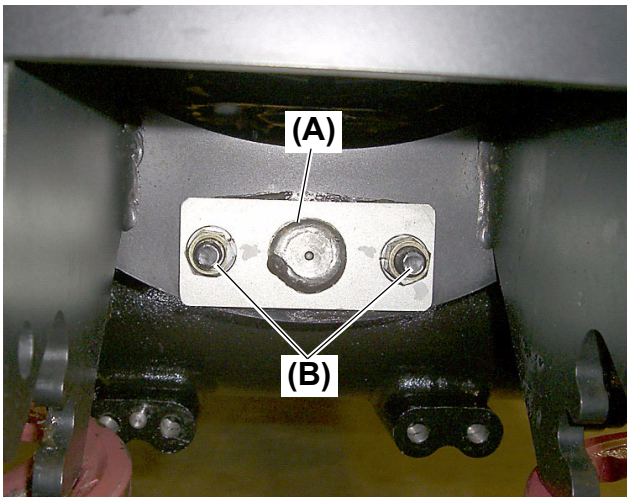

Fig. 1

(A) Center pin
(B) Nut M12

⚠ WARNING

- Before working, ensure that the rigid stands have been securely installed to the chassis frame.

1. Remove the two (2) M12 nuts **(Fig. 1, (B))** from the center pin **(Fig. 1, (A))** located in front of the center of the front axle.

NOTE:

- Tightening torque for assembling: 57.8 to 72.3 ft•lbs (78.4 to 98.0 N•m)

■ Front Axle

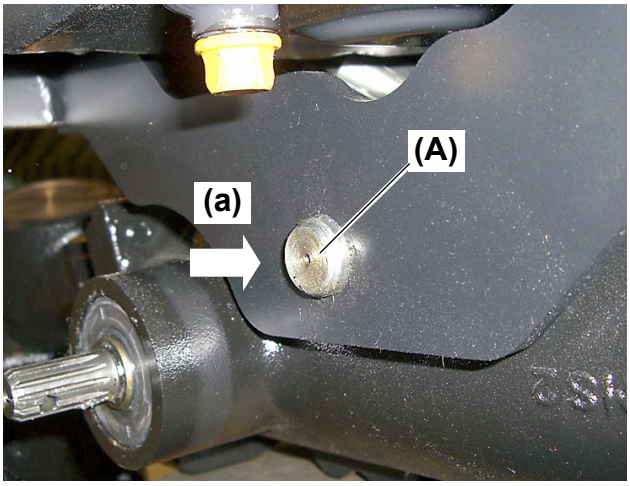

Fig. 2

(A) Center pin
(a) Tapping direction

2. To avoid falling of the front axle, support front axle with a hydraulic, wheeled jack. Once the center pin **(Fig. 2, (A))** has been removed, lower the axle to the ground and remove the front axle from under the tractor.

3. One (1) person should tap out the center pin **(Fig. 2, (A))** with an appropriate tool from the rear of the center of the front axle while another person supports the front axle.

⚠ WARNING

●Note that the front axle may incline forward or backward after the center pin (Fig. 2, (A)) is tapped out.

■ Front Axle



Fig. 3

* Photo **(Fig. 3)** shows front view of the front axle.

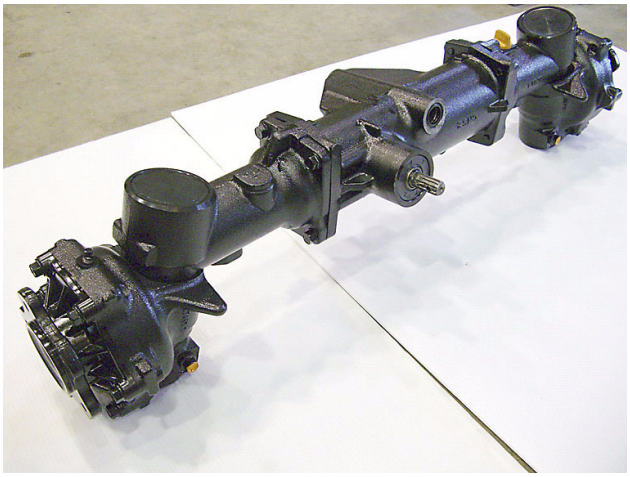

Fig. 4

* Photo **(Fig. 4)** shows rear view of the front axle.

■ Front Axle

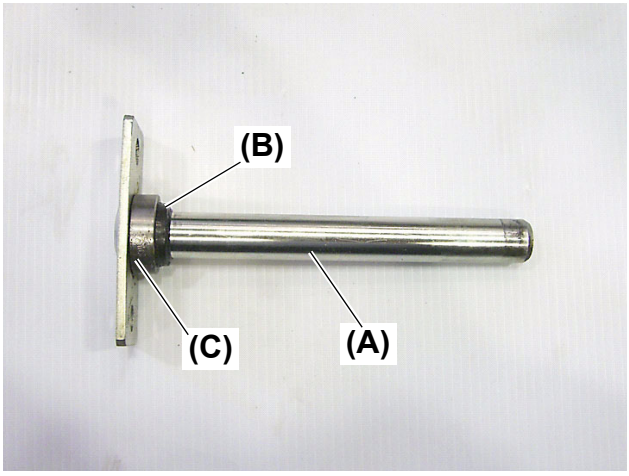

Fig. 5

(A) Center pin
(B) Oil seal
(C) Collar

4. In some cases, the oil seal **(Fig. 5, (B))** on the front axle side is removed together with the center pin **(Fig. 5, (A))**, as shown in the photo **(Fig. 5)**.

NOTE:

●The oil seal should be replaced any time the center pin is removed from the tractor.

■ Front Axle

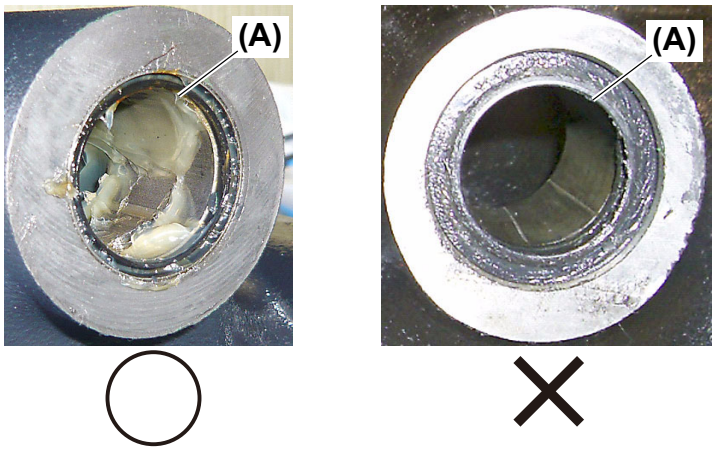

Fig. 6

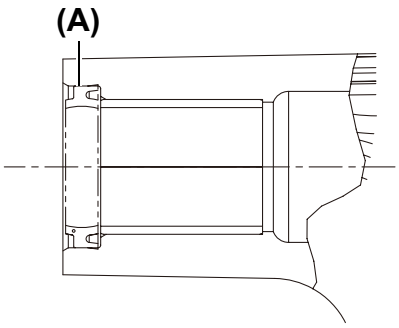

Fig. 7

(A) Oil seal

5. When assembling the front axle, observe the following point:
   The oil seal **(Fig. 6, 7, (A))** on the center pin of the front axle should be fitted as shown in the illustration **(Fig. 7)**. (This should be applied to the front and rear sides.)

NOTE:

●When installing a new seal, liberally apply grease to the sealing surface of the seal.

■ Front Axle

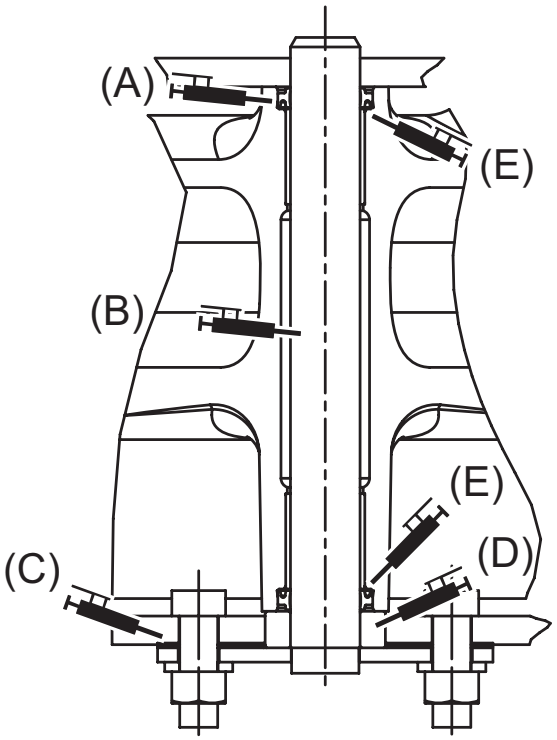

Fig. 8

(A) Greasing the dust seal
(B) Greasing the center pin
(C) Greasing the shim for the center pin
(D) Greasing the collar
(E) Greasing the oil seal lip

NOTE:

● Before installing the center pin, apply Shell Alvania grease to the oil seal and the center pin.

■ Front Axle

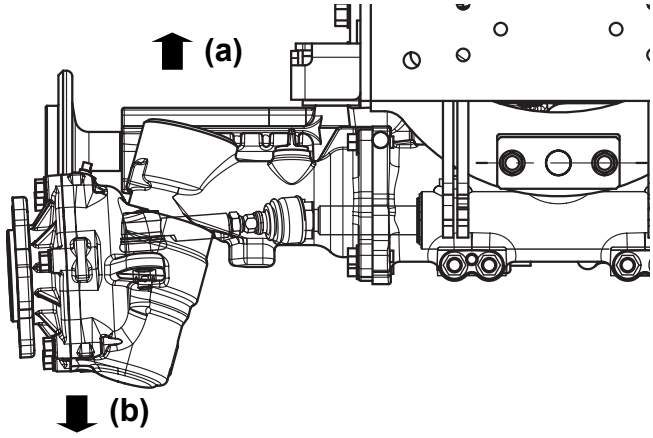

Fig. 9

(a) Upward
(b) Downward

6. Ensure that the installed front axle smoothly swings upward and downward.

NOTE:

● In assembling, resistance of about 11.2 to 78.7 lbs (50 to 350 N) is necessary in the directions **(Fig. 9, (a))** and **(Fig. 9, (b))**. To measure the resistance, use a spring scale.

IMPORTANT

● If the front axle rattles in swing movement, **remove the shim** from between the frame and center pin mounting flange.

IMPORTANT

● Assembling with no smooth swing movement of the front axle causes wear of the front axle case.

■ Front Axle

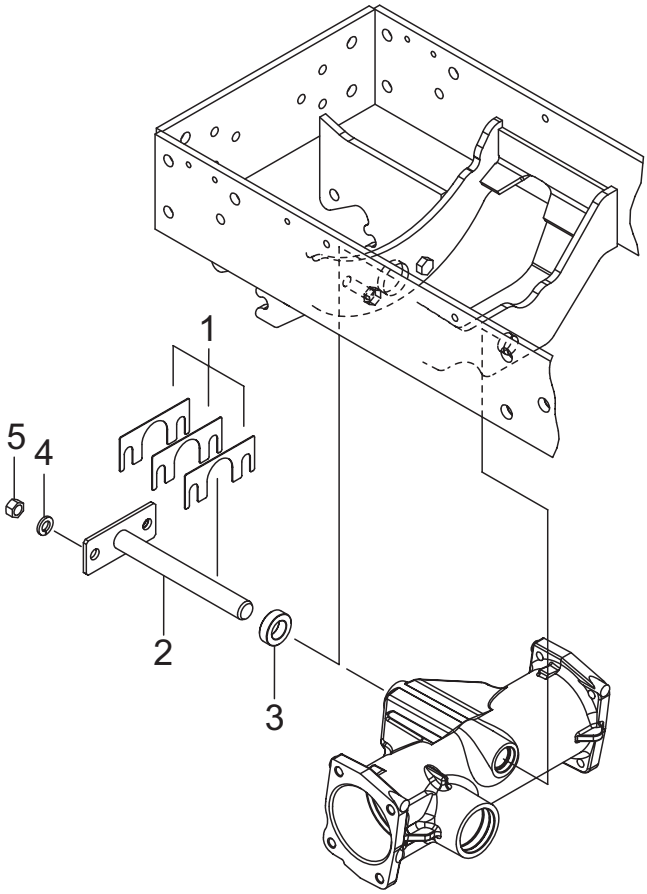

Fig.10

REF.	Description	Q'TY.
1	Shim Set, Center Pin	1
2	Pin ASSY., Center	1
3	Collar, 22 × 38 × 11.5	1
4	Washer, 12	2
5	Nut, 12	2

17. Steering Wheel

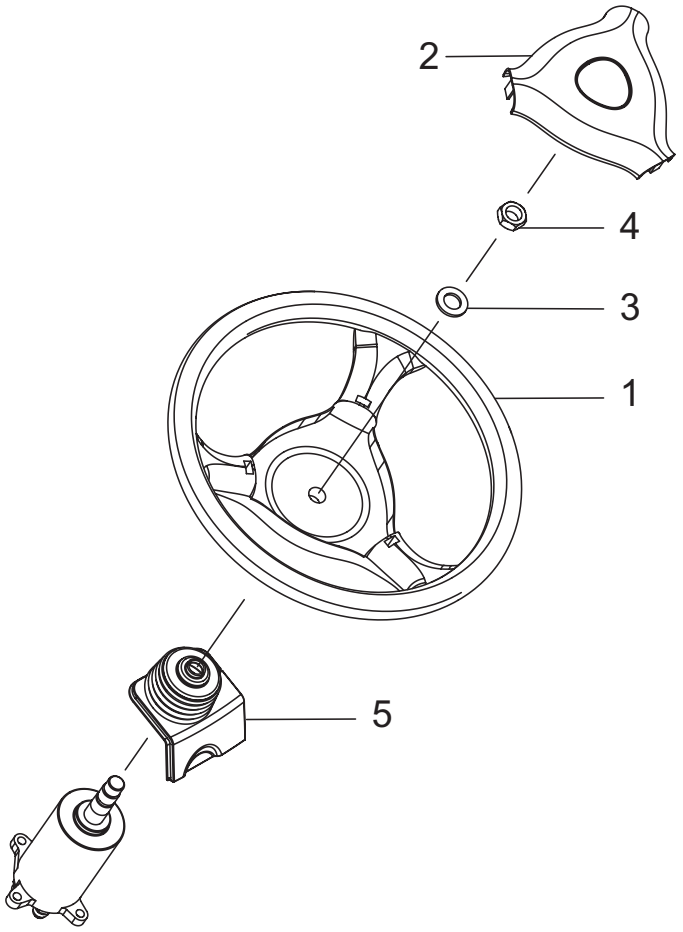

Fig. 1

REF.	Description	Q'TY.
1	Wheel, Steering	1
2	Cap, Steering Wheel	1
3	Washer, 16	1
4	Nut	1
5	Boot	1

NOTE:

- The dashboard upper including the instrument panel can be disassembled without removal of the steering wheel **(Fig. 1, (Ref. #1))**.

■ Steering Wheel



Fig. 2

(A) Steering wheel cap

1. Pull off the steering wheel cap **(Fig. 2, (A))** by lifting upward.

■ Steering Wheel

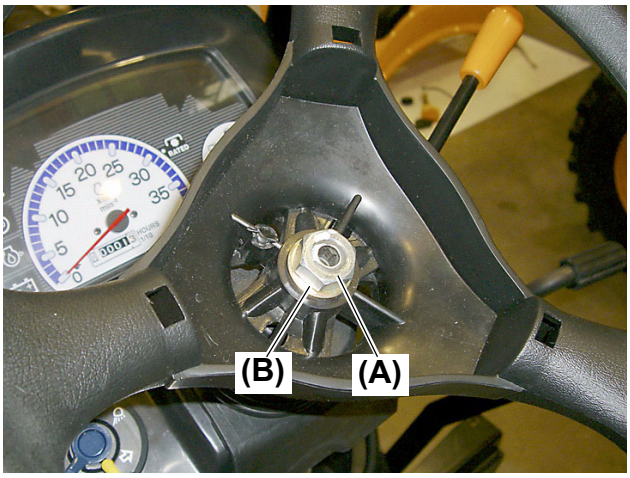

Fig. 3

(A) Nut, 5/8-18 UNF
(B) Washer

2. Remove the 5/8-18 UNF nut **(Fig. 3, (A))** and the washer **(Fig.3, (B))**.
   Tightening torque for assembling: 18.1 to 21.7 ft•lbs (24.5 to 29.4 N•m)

■ Steering Wheel



Fig. 4

3. Remove the steering wheel.

⚠ WARNING

- **Removing the steering wheel is difficult because it has been fitted onto a splined, tapered shaft. Be careful to avoid hitting your face in reaction to withdrawal of the steering wheel.**

18. Battery

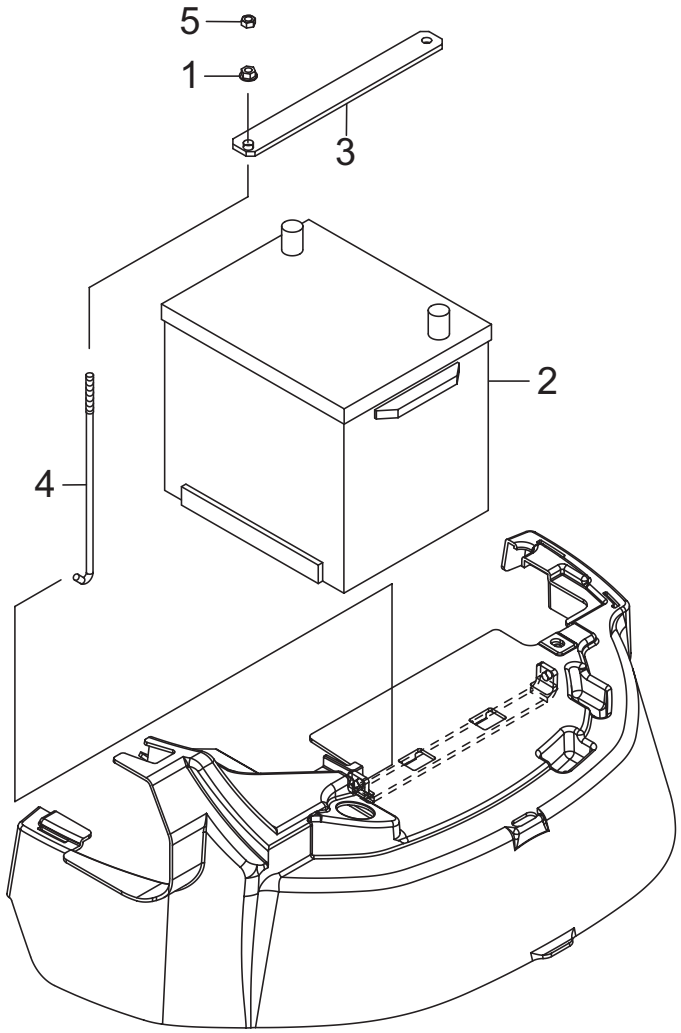

Fig. 1

REF.	Description	Q'TY.
1	Nut, M6	2
2	Battery, 26R, ASSY.	1
3	Clamp, Battery	1
4	Rod, Battery Clamp	2
5	Nut, 6	2

■ Battery

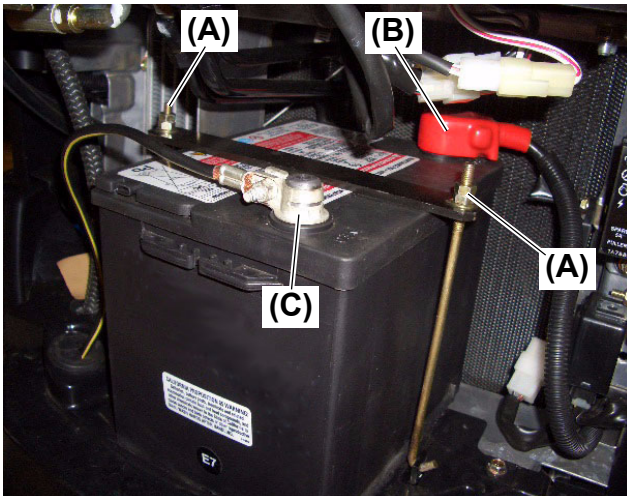

Fig. 2

(A) Jam nuts and nuts with washer
(B) Positive (+) terminal
(C) Negative (-) terminal

1. Remove the lower dash screen by removing the retaining knob located at the top center of the lower dash screen.
2. Disconnect the black / yellow negative (-) cable from the negative (-) terminal **(Fig. 2, (C))**.
3. Remove both jam nuts and nuts with washer **(Fig. 2, (A))** from the battery J-bolts.
4. Remove the battery retaining strap and both J-bolts.
5. Slide the battery out to gain access to the black positive (+) cable.
6. Disconnect the black positive (+) cable from the positive (+) terminal **(Fig. 2, (B))**.
7. Remove the battery.

NOTE:

- This photo shows that the negative (-) terminal **(Fig. 2, (C))** is connected. However, before maintenance work, it should be disconnected.

⚠ CAUTION

- **Make sure to first disconnect the negative (-) terminal (Fig. 2, (C)).**
  (For installation, start with connecting the positive (+) terminal (Fig. 2, (B)).)

■ Battery

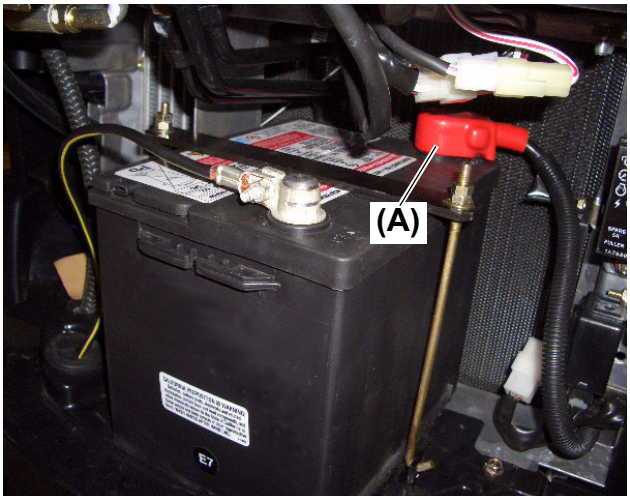

Fig. 3

(A) Red cover for the positive (+) terminal

8. Remove the positive (+) terminal **(Fig. 3, (A))** in the red cover positioned in the back and then remove the battery.

⚠ CAUTION

- **Keep the removed battery in a cool and dark place. Be careful to avoid any short circuit that occurs when the battery gets wet with water or contacts with a metal object.**
- **Make sure to first disconnect the negative (-) terminal.**
  (For installation, start with connecting the positive (+) terminal.)

19. Hour Meter Cable

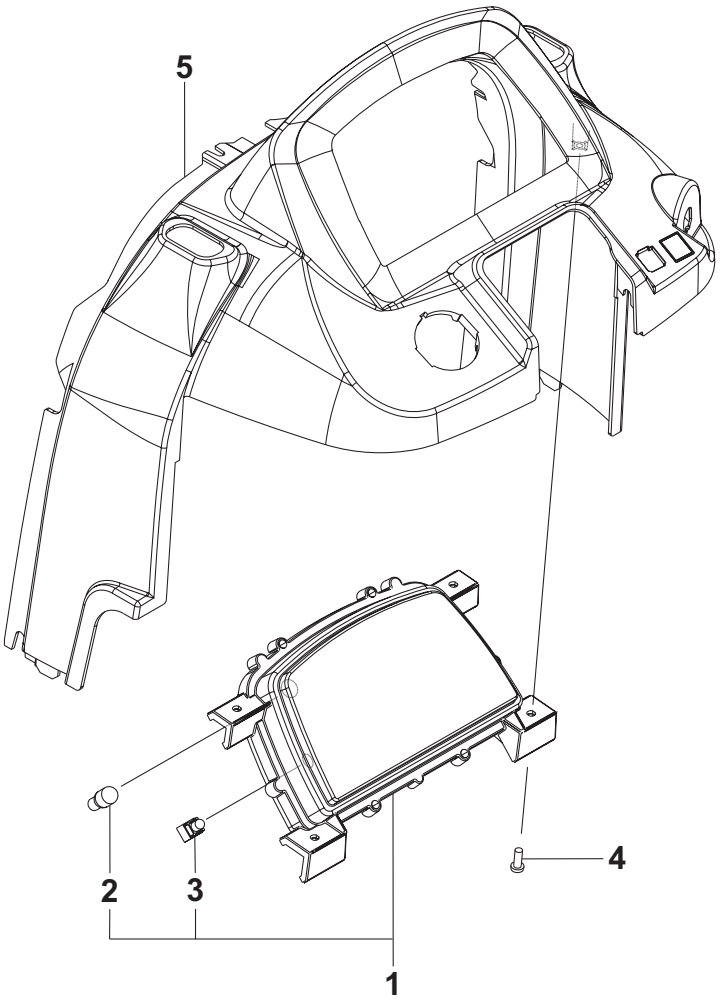

Fig. 1

REF.	Description	Q'TY.
1	Meter ASSY.	1
2	Bulb	12
3	Bulb, 14 V - 1.4 W	2
4	Screw, 6.0 × 16	4
5	Cover, Dashboard Upper	1

■ Hour Meter Cable

(Disconnect the hour meter cable from the rear of the instrument panel.)

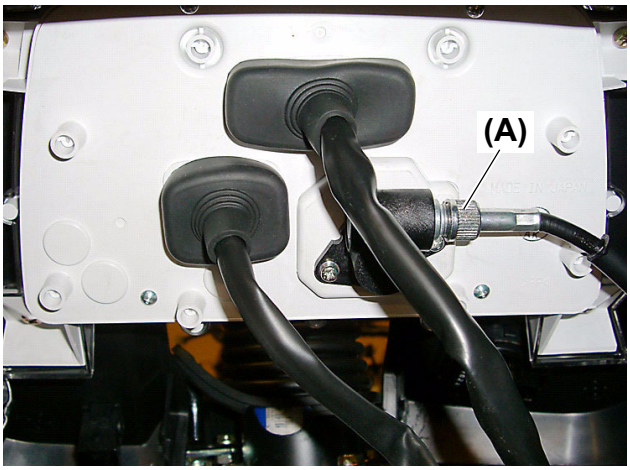

Fig. 2



Fig. 3

(A) Hour meter cable
(B) Front grip

1. The four (4) nuts securing the front grip to the column bracket must be removed. Remove the front grip **(Fig. 3, (B))**.

2. To remove the hour meter cable the seven (7) screws securing the dash cover upper must be removed.

3. Raise the dash to gain access to the bottom of the instrument panel.

4. Slide the rubber weatherproof boot off of the connectors.

5. Remove the connectors by depressing the lock tab to separate from the instrument panel.

6. Unscrew the hour meter cable **(Fig. 2, (A))** from the meter assembly.

■ Hour Meter Cable

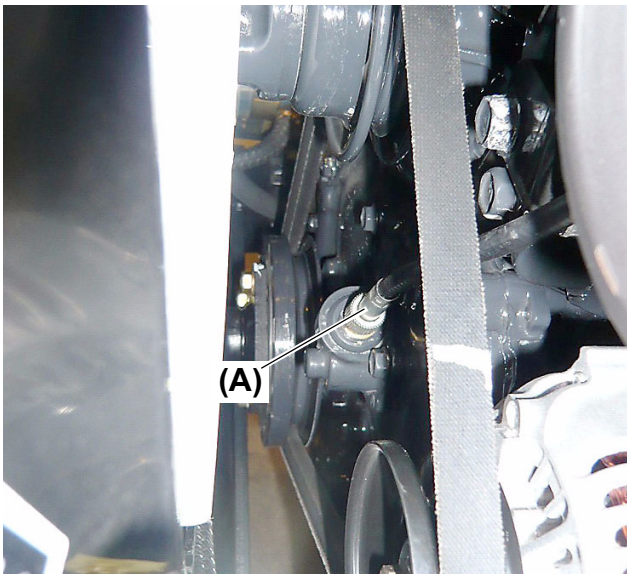

Fig. 4

(A) Hour meter cable

7. Unscrew the hour meter cable **(Fig. 4, (A))** from the mounting point on the engine.

■ Hour Meter Cable

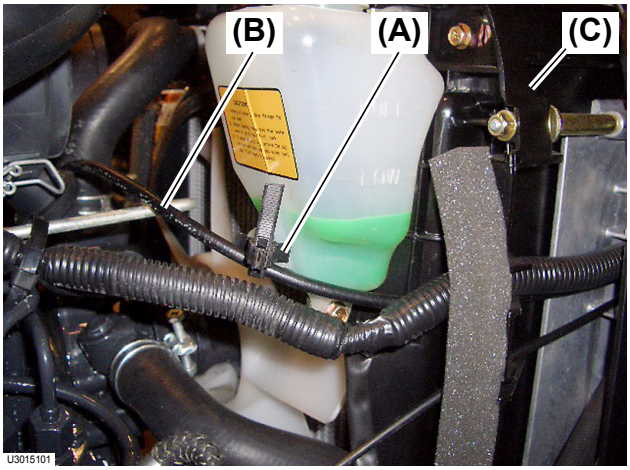

Fig. 5

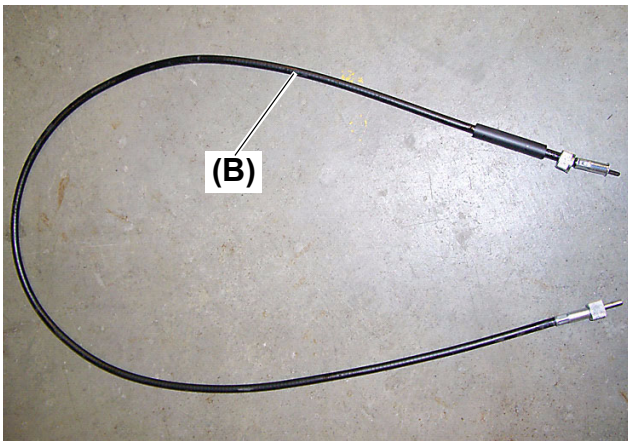

Fig. 6

(A) Wire clamp
(B) Hour meter cable
(C) Column bracket

8. Loosen the adjustable wire clamp **(Fig. 5, (A))**.

9. Remove the wire harness from the column bracket **(Fig. 5, (C))**. The hour meter cable **(Fig. 5, 6, (B))** is located behind the wire harness.
   Remove the hour meter cable from the unit.

■ Hour Meter Cable

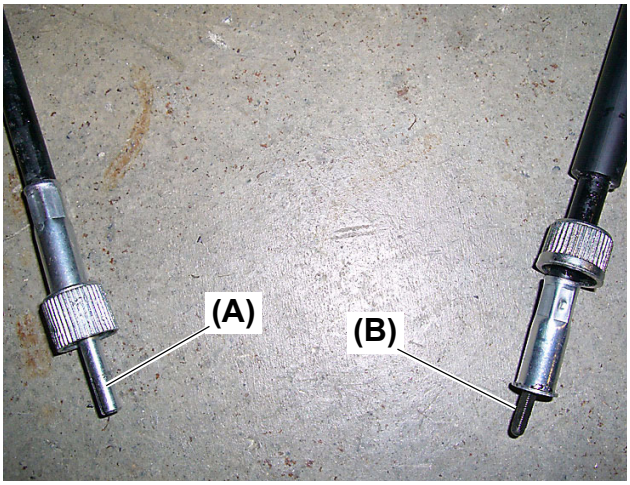

Fig. 7

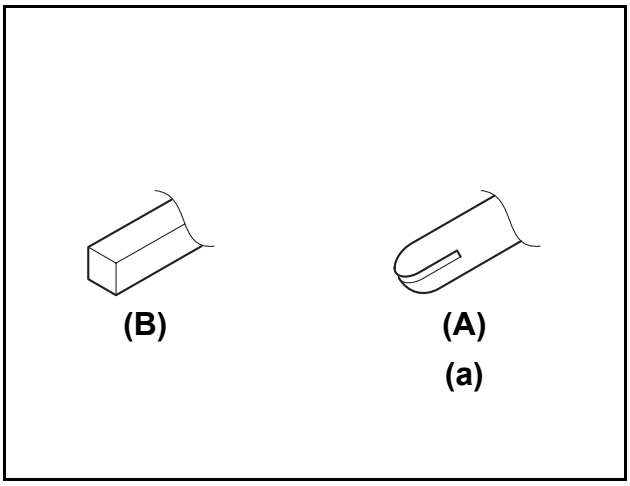

Fig. 8

(A) Hour meter cable end on the engine side
(B) Hour meter cable end on the meter side
(a) Groove (Hour meter cable end on the engine side)

10.The end of the hour meter cable **(Fig. 7, (A), (B))** goes to the meter assembly in the dash.

NOTE:

When installing the hour meter cable, observe the following point:

- Direct the hour meter cable end **(Fig. 7, 8, (A))** with the groove **(Fig. 8, (a))** toward the engine.
- The removed sponge must be reinstalled.

11.Installation of the hour meter cable is the reverse order of removal.

20. Front Grip

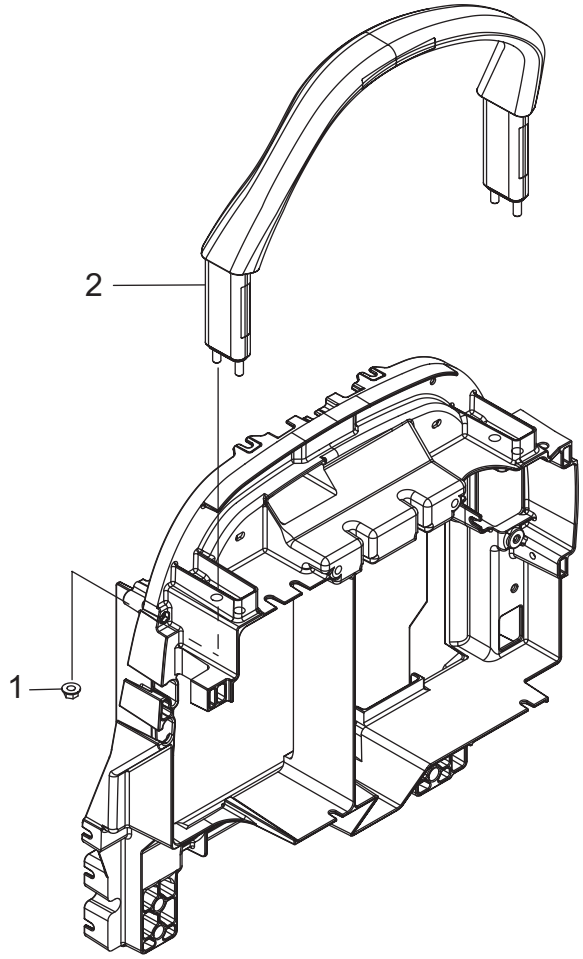

Fig. 1

REF.	Description	Q'TY.
1	Nut, M8	4
2	Grip	1

■ Front Grip



Fig. 2

(A) Front grip

1. Remove the two (2) M8 nuts from the right side as well.
2. Remove the front grip **(Fig. 2, (A))**.

21. Dashboard Upper

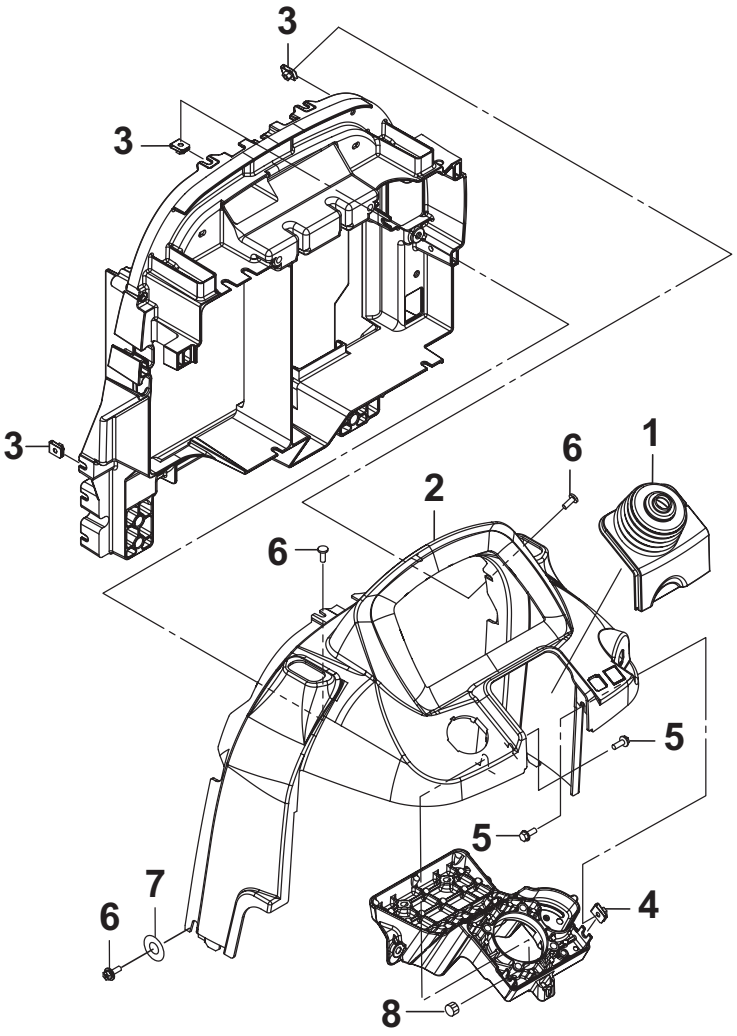

Fig. 1

REF.	Description	Q'TY.
1	Boot	1
2	Cover, Dashboard Upper	1
3	Plate Nut, M6	5
4	Plate Nut, M6	1
5	Bolt, 6 × 16 (L: 0.64 in.)	2
6	Screw, 6 × 16 (L: 0.64 in.)	5
7	Large Washer, M6	2
8	Nut - Washer 6	1

NOTE:

●The dashboard upper **(Fig. 1, (Ref. #2))** can be disassembled without removal of the steering wheel.

■ Dashboard Upper

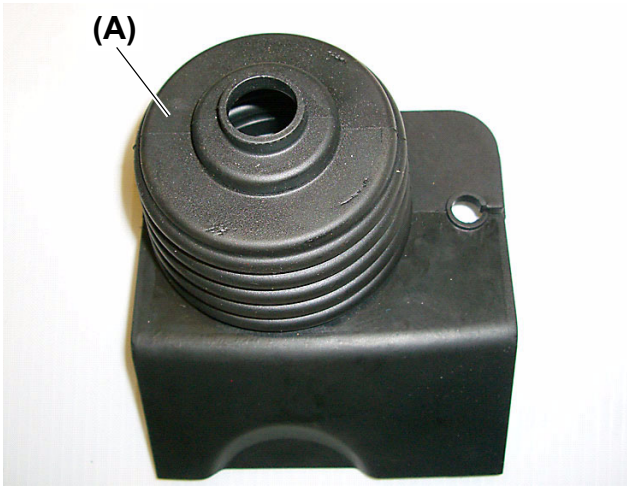

Fig. 2

(A) Steering wheel boot

NOTE:

●When removing the dashboard upper, be careful not to lose the plate nut.

1. Remove the steering wheel boot **(Fig. 2,(A))**.

NOTE:

●The steering wheel boot can be easily removed with no tool.
●The dashboard upper cannot be removed unless the engine control lever is removed.

■ Dashboard Upper

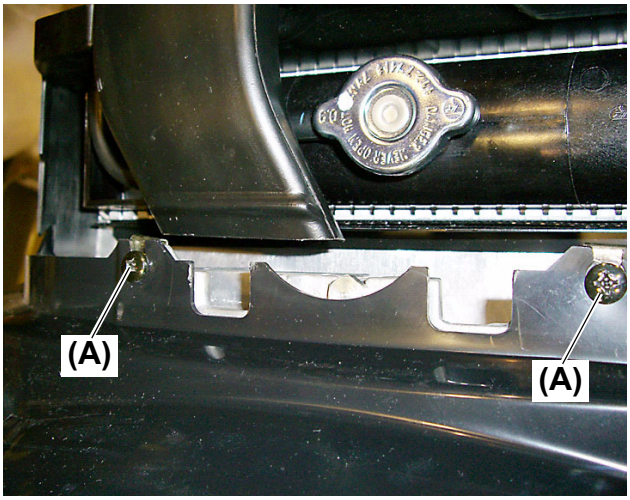

Fig. 3

(A) Screws

2. Remove the two (2) screws **(Fig. 3, (A))** from the top side of the dashboard upper.

■ Dashboard Upper

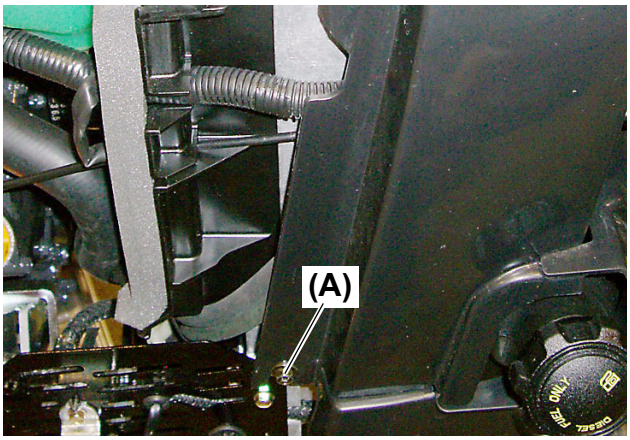

Fig. 4

(A) Screw

3. Remove the one (1) screw **(Fig.4, (A))** from the lower left side of the dashboard upper.

■ Dashboard Upper

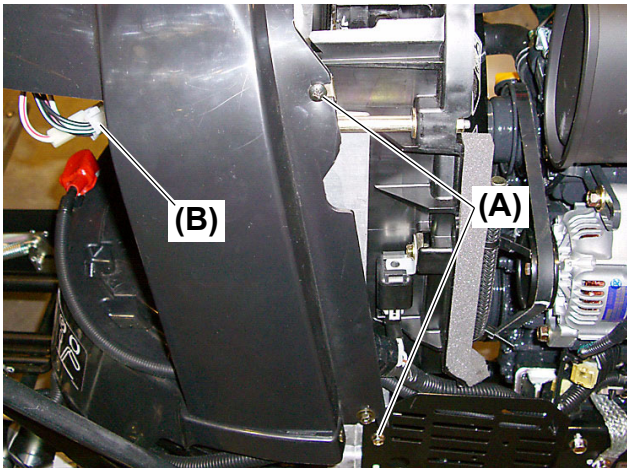

Fig. 5

(A) Screws
(B) Starter key switch connector

4. Remove the two (2) screws **(Fig. 5, (A))** and two (2) starter key switch connectors **(Fig. 5, (B))** from the right side of the dashboard upper.

■ Dashboard Upper

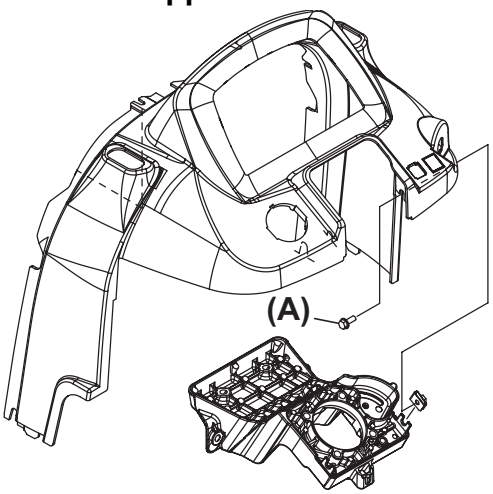

Fig. 6

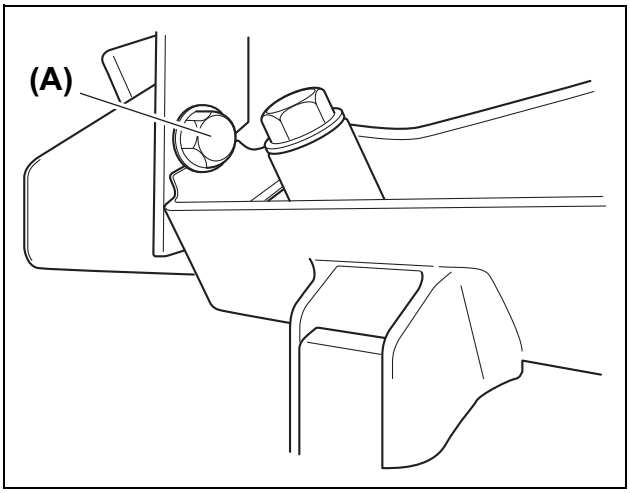

Fig. 7

(A) Bolt M6

5. Remove the two (2) M6 bolts **(Fig. 6, 7, (A))** from the right and left sides inside the steering column section.

■ Dashboard Upper

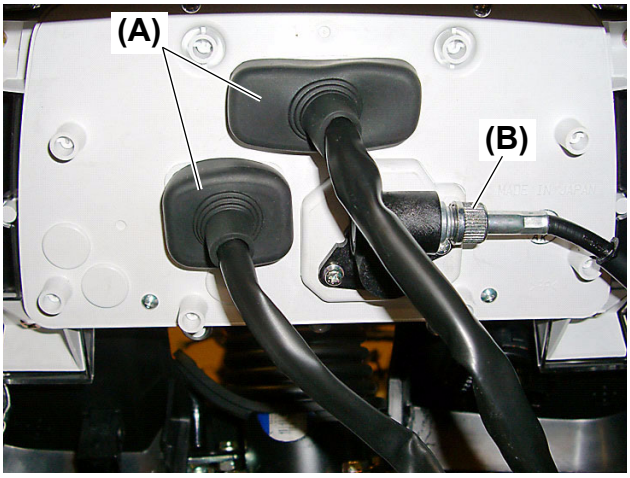

Fig. 8

(A) Two (2) instrument panel connectors
(B) Meter cable

6. Disconnect the instrument panel connectors **(Fig. 8, (A))** and the meter cable **(Fig. 8, (B))** from the rear side of the instrument panel.

■ Dashboard Upper

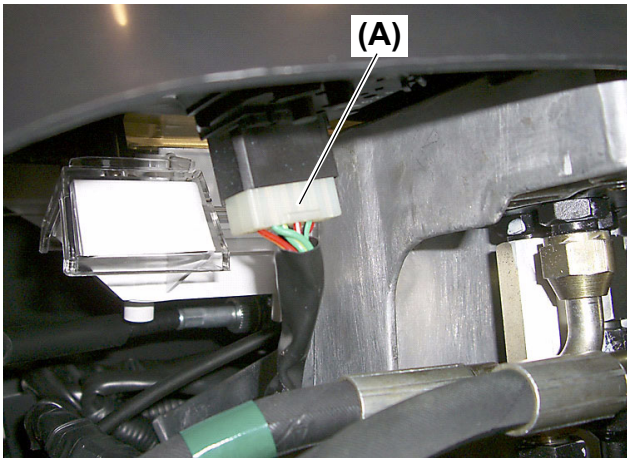

Fig. 9

(A) Connector for the headlight / work light / turn signal switch

7. Disconnect the connector for the headlight / work light / turn signal switch (combination switch) **(Fig. 9, (A))**.

■ Dashboard Upper

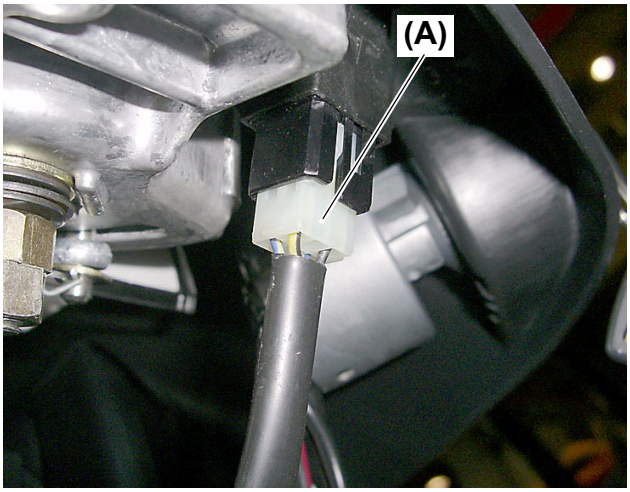

Fig. 10

(A) Hazard lights button switch connector

8. Disconnect the hazard lights button switch connector **(Fig. 10, (A))**.

■ Dashboard Upper

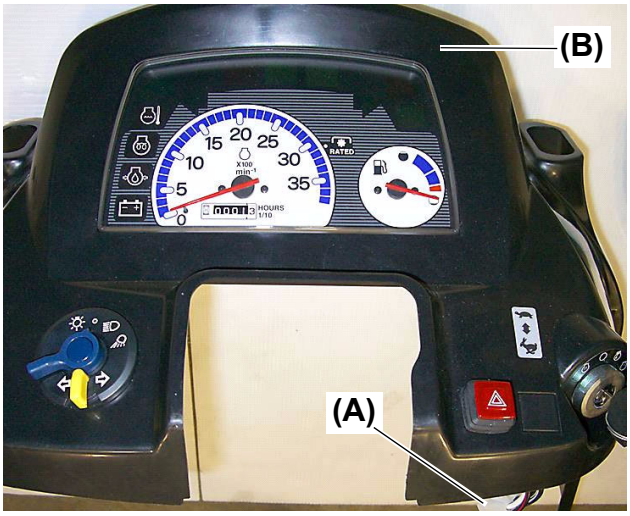

Fig. 11

(A) Key switch coupler
(B) Dashboard upper

9. Unplug the two (2) key switch couplers **(Fig. 11, (A))**.

10. Remove the dashboard upper **(Fig. 11, (B))**.

22. Dashboard Upper Switch

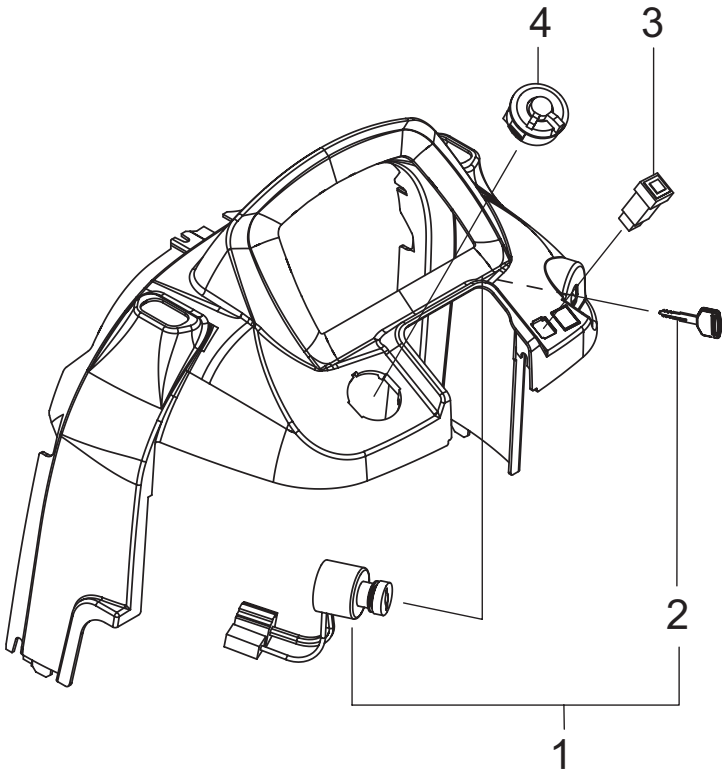

Fig. 1

REF.	Description	Q'TY.
1	Switch ASSY., Starter	1
2	Key	1
3	Hazard lights button switch	1
4	Switch, Combination	1

NOTE:

●The switches on the dashboard upper can be removed without removal of the dashboard upper.

■ Dashboard Upper Switch

1. Remove the connector and meter cable from the rear side of each switch (See page 10-123, 21, Step 6).

■ Dashboard Upper Switch

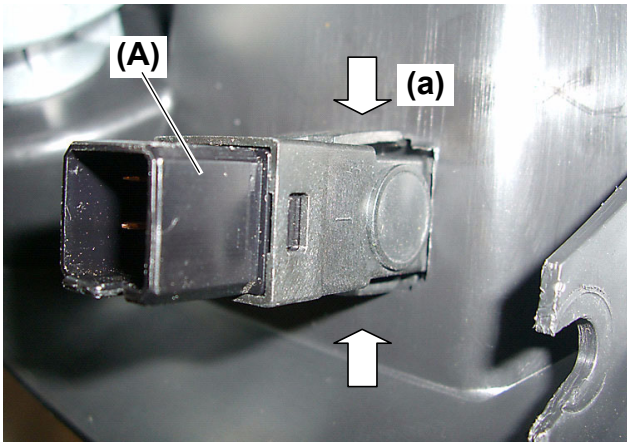

Fig. 2

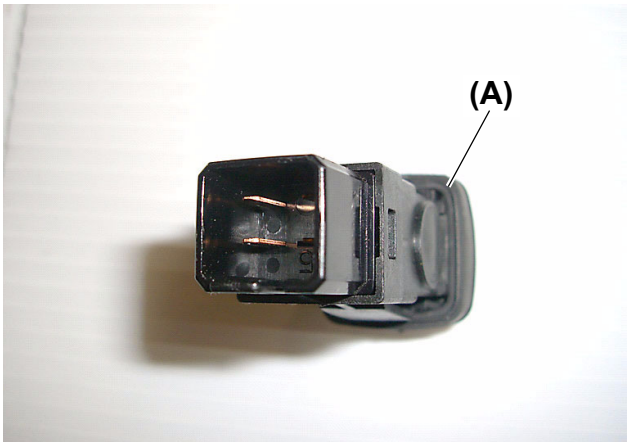

Fig. 3

(A) Hazard lights button switch
(a) Push

2. Pull out the hazard lights button switch **(Fig. 2, 3, (A))** by compressing the notch from the back of the hazard lights button switch.

NOTE:

●To install switch, snap the switch into the dashboard from the front side. Reconnect the harness terminal connector to the switch. Check for proper operation of the hazard lights.

■ Dashboard Upper Switch

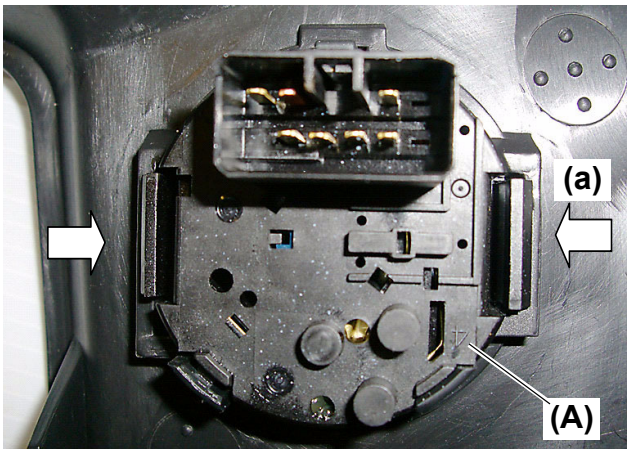

Fig. 4

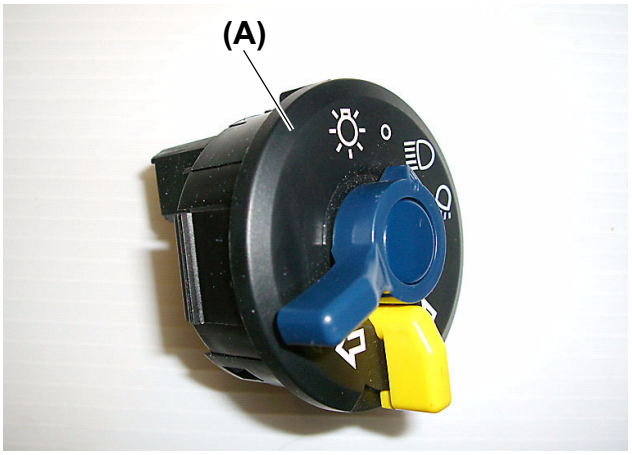

Fig. 5

(A) Headlight / work light / turn signal switch (combination switch)
(a) Push

3. Pull out the headlight / work light / turn signal switch **(Fig. 4, 5, (A))** by compressing the notch from the back of the headlight / work light / turn signal switch.

NOTE:

- To install switch, snap the switch into the dashboard from the front side. Reconnect the harness terminal connector to the switch. Check for proper operation of the headlights, work lights, turn signals.

■ Dashboard Upper Switch

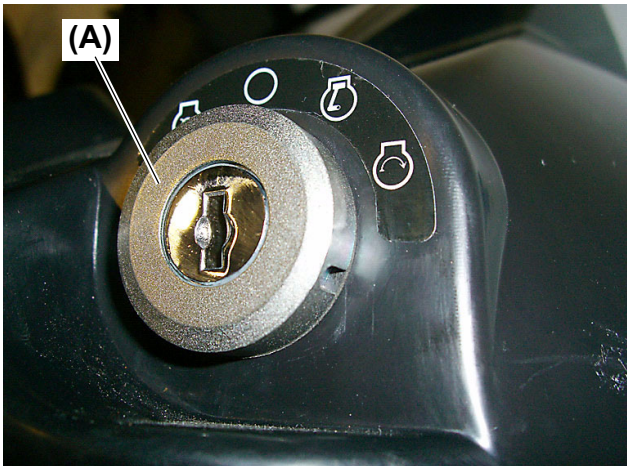

Fig. 6

(A) Ring nut of the starter key switch

4. Using a spanner wrench or a pair of pliers, remove the ring nut **(Fig. 6, (A))** of the starter key switch. Remove the internal washer and then pull out the starter key switch toward the inside of the dashboard upper.

NOTE:

●Tightening torque for installation: 5.9 to 10.3 ft•lbs (8.0 to 14.0 N•m)

■ Dashboard Upper Switch

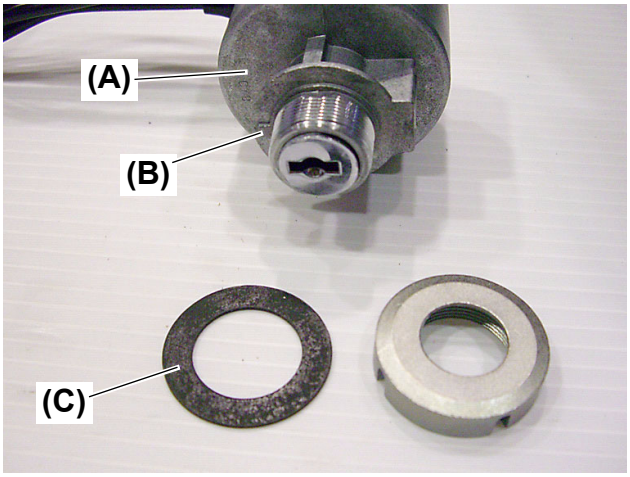

Fig. 7

(A) Starter key switch
(B) Notch
(C) Washer

IMPORTANT

- When installing the starter key switch **(Fig. 7, (A))** align the notch **(Fig. 7, (B))** of the starter key switch with the groove on the dashboard.
- Remember to install the washer **(Fig. 7, (C))**.
- Check for proper operation of the engine starter and glow plugs.

23. Instrument Panel

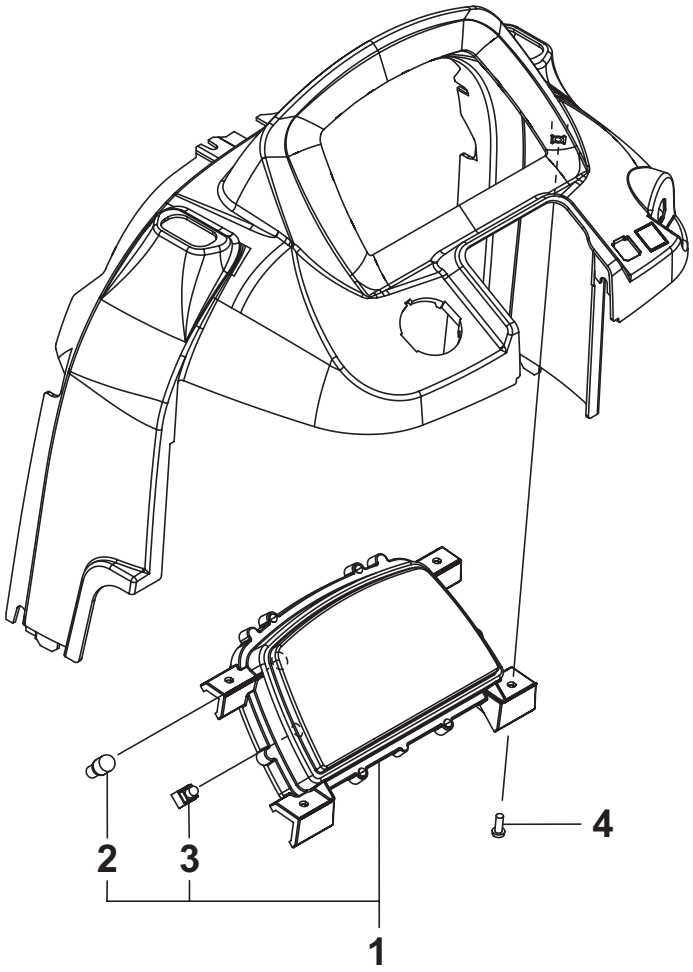

Fig. 1

REF.	Description	Q'TY.
1	Meter ASSY.	1
2	Bulb	6
3	Bulb, 14 V - 1.4 W	2
4	Screw, 6.0 × 16	4

NOTE:

- In order to allow the instrument panel to be more easily removed, first remove the dashboard upper.
- The dashboard upper can be disassembled without removal of the steering wheel.

■ Instrument Panel

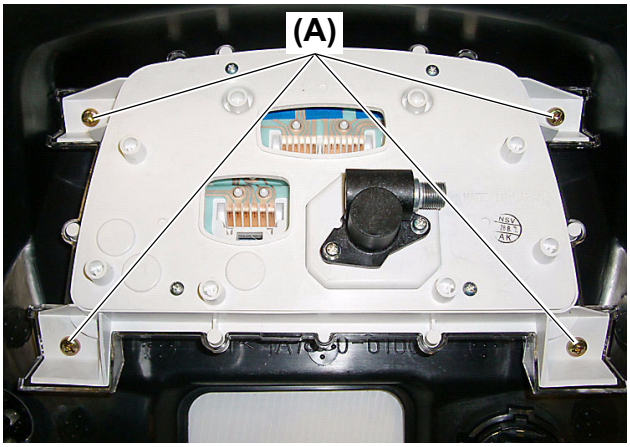

Fig. 2

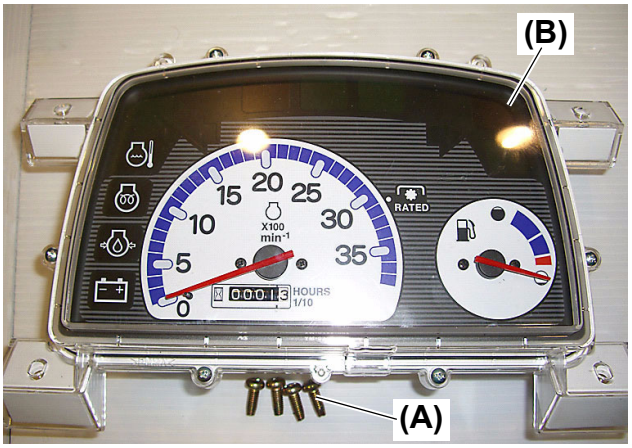

Fig. 3

(A) Screws, M6 × 16 mm (L: 0.64 in.)
(B) Instrument panel

1. Separate the instrument panel **(Fig. 3, (B))** by removing the four (4) M6 × 16 mm (L: 0.64 in.) screws **(Fig. 2, 3, (A))** at the back of the instrument panel.

NOTE:

●Tightening torque for installation: 1.8 to 2.5 ft•lbs (2.5 to 3.4 N•m)

■ Instrument Panel

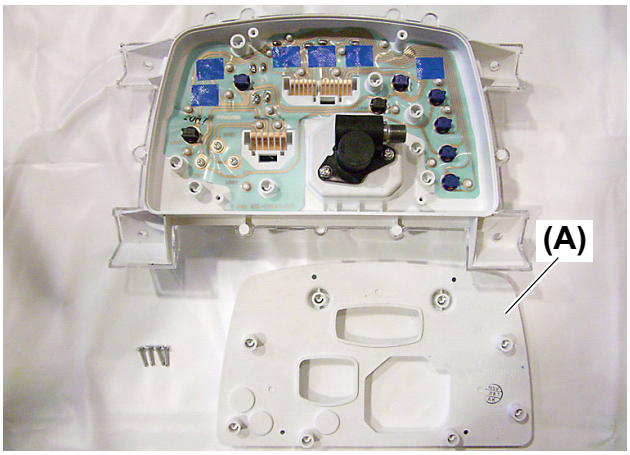

Fig. 4

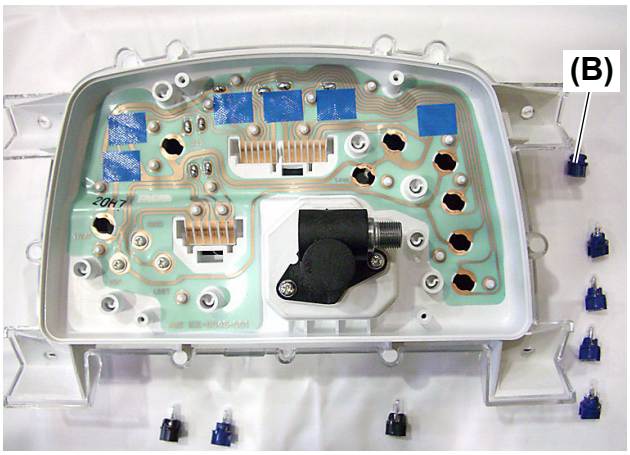

Fig. 5

(A) Rear cover for the instrument panel
(B) Light bulb

2. Removing the rear cover for the instrument panel **(Fig. 4, (A))** allows for replacement of individual light bulbs **(Fig. 5, (B))**.

3. Reassembly and installation of the instrument panel is the reverse order of disassembly and removal.

24. Dashboard Bottom Cover

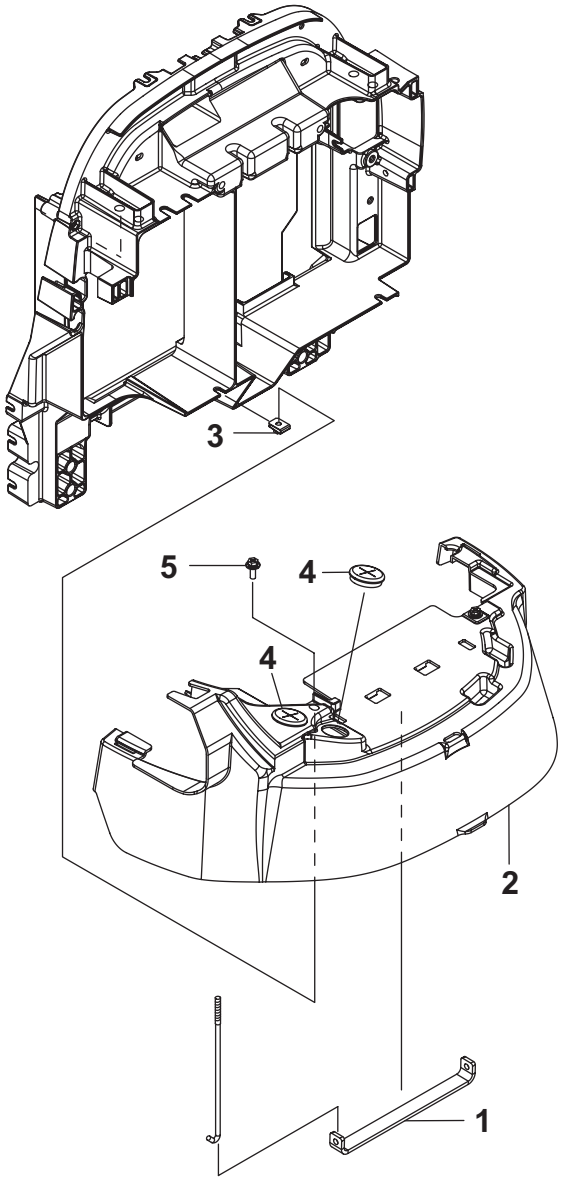

Fig. 1

REF.	Description	Q'TY.
1	Stay, Battery	1
2	Cover M ASSY., Dash BTM	1
3	Plate Nut, M6	2
4	Grommet 31	2
5	Bolt, M6 × 20 (L: 0.8 in.)	2

NOTE:

●Do not lose the plate nut **(Fig. 1, (Ref. #3))** when removing the dashboard bottom cover.

■ Dashboard Bottom Cover

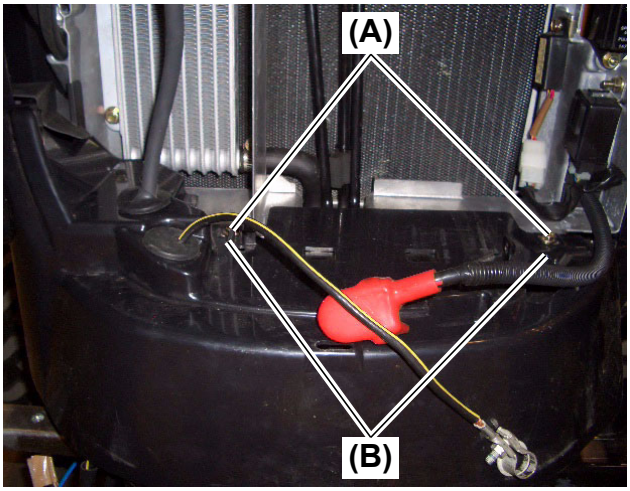

Fig. 2



Fig. 3

(A) Bolts, M6 × 20 mm (L: 0.8 in.)
(B) Battery stay
(C) Dashboard bottom cover

1. Remove the two (2) M6 × 20 mm (L: 0.8 in.) bolts **(Fig. 2, (A))** and take out the dashboard bottom cover **(Fig. 3, (C))** together with the battery stay **(Fig. 2, (B))**.

NOTE:

- The negative (–) battery cable will need to be disconnected from the frame of tractor and feed the cable through the grommet to allow complete removal of the dashboard bottom cover.

25. Air Cleaner

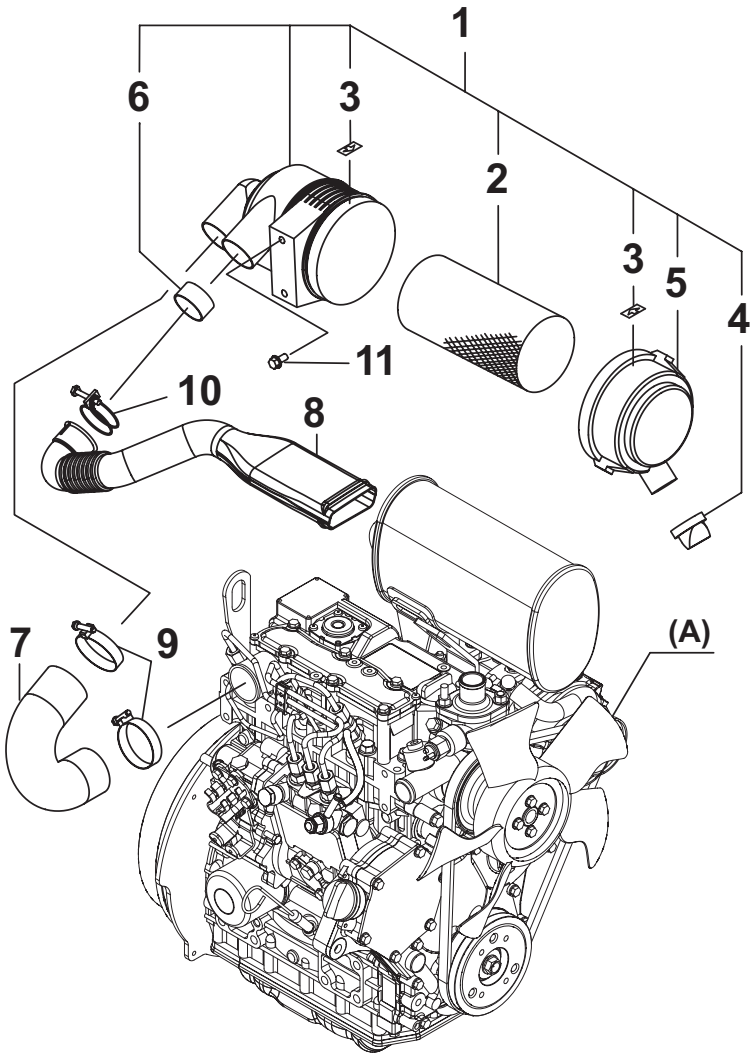

Fig. 1

REF.	Description	Q'TY.
1	Cleaner ASSY., Air	1
2	Element Cleaner	1
3	Label, Mark	2
4	Valve, Unloader	1
5	Cover ASSY.	1
6	Ring	1
7	Hose, Air Intake	1
8	Air Intake Pipe	1
9	Clamp, Hose 54	2
10	Clamp, Hose 50	1
11	Bolt, 8 × 16 (L: 0.64 in.)	2

■ Air Cleaner

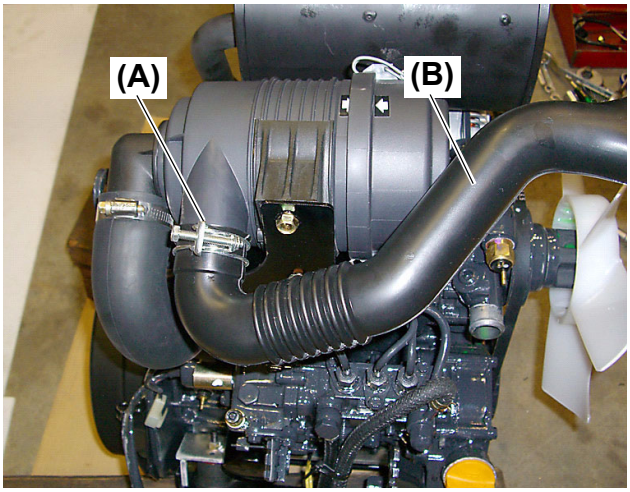

Fig. 2

(A) Hose clamp 50
(B) Air intake pipe

1. Remove hood for ease of access to the air cleaner.

2. Remove the hose clamp **(Fig. 2, (A))** and air intake pipe **(Fig. 2, (B))**.

■ Air Cleaner

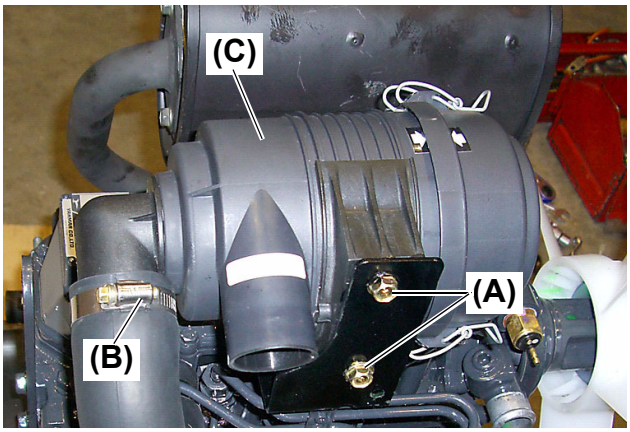

Fig. 3

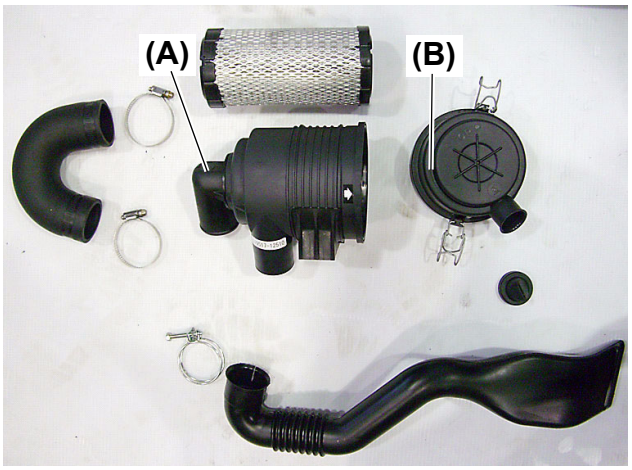

Fig. 4

(A) Bolt M8 × 16 mm (L: 0.64 in.)
(B) Hose clamp 54
(C) Air cleaner

* Photo **(Fig. 4)** shows the disassembled air cleaner.

3. Loosen the hose clamp **(Fig. 3, (B))** and remove the hose from the air cleaner.

4. Remove the two (2) M8 × 16mm (L: 0.64 in.) bolts **(Fig. 3, (A))** that secure the air cleaner **(Fig. 3, (C))** to the air cleaner bracket.

5. Remove air cleaner from tractor.

26. Exhaust Pipe & Muffler

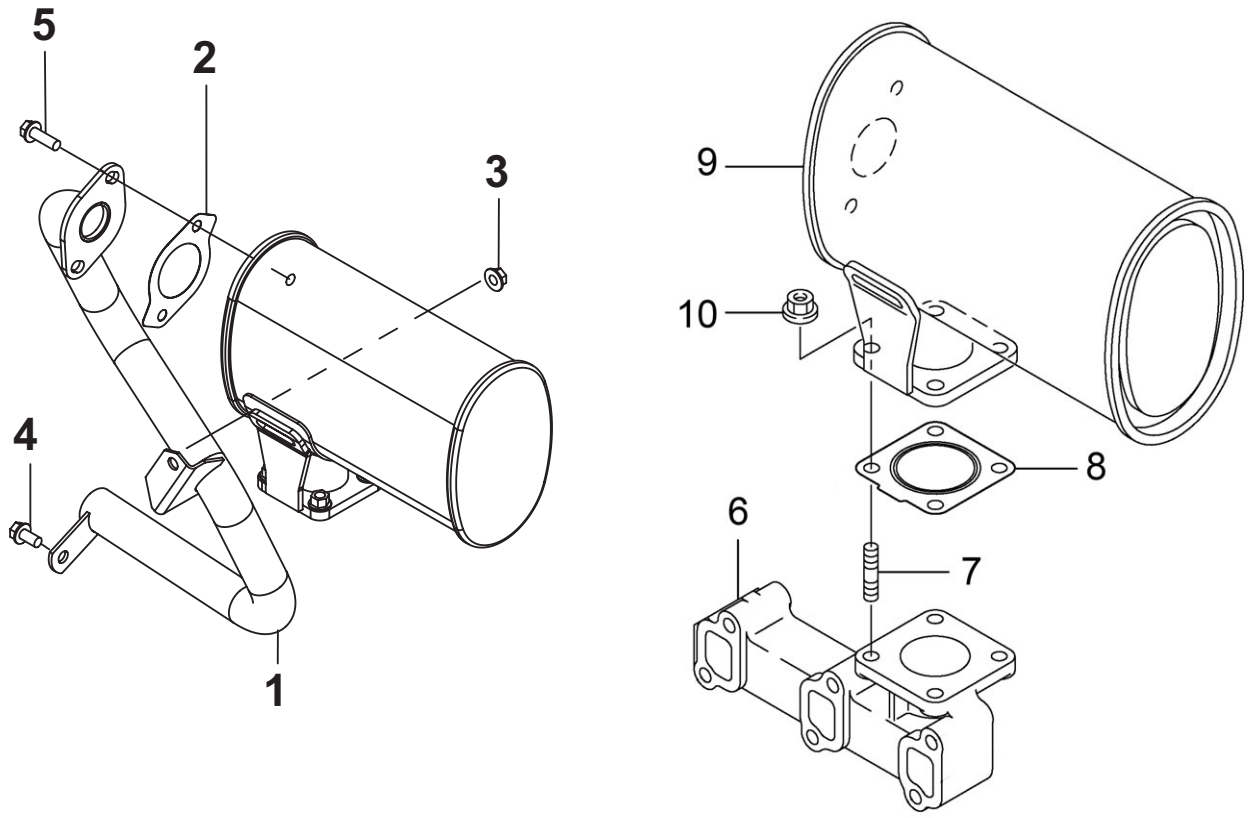

Fig. 1

REF.	Description	Q'TY.
1	Pipe, Exhaust	1
2	Gasket, Exhaust	1
3	Nut, M8	1
4	Bolt, 8 × 16 (L: 0.64 in.)	1
5	Bolt, 8 × 25 (L: 1.0 in.)	2
6	Manifold, exhaust	1
7	Bolt, M8 × 22 (L: 0.88 in.)	4
8	Gasket, muffler	1
9	Muffler	1
10	Nut	4

■ Exhaust Pipe & Muffler

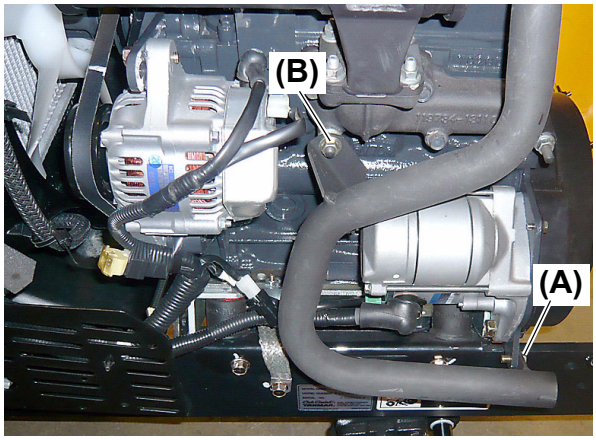

Fig. 2

(A) Bolt M8 × 16 mm (L: 0.64 in.)
(B) Nut M8

1. Remove hood.
2. Remove the M8 nut **(Fig. 2, (B))** on the exhaust pipe bracket to the exhaust manifold stud.
3. Remove the M8 × 16mm (L: 0.64 in.) bolt **(Fig. 2, (A))** from the exhaust pipe bracket to the frame.

■ Exhaust Pipe & Muffler

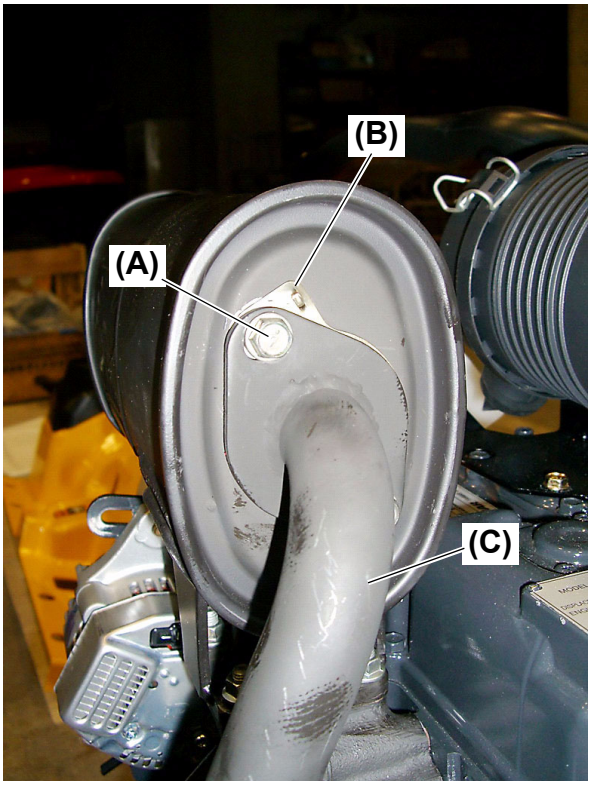

Fig. 3

(A) Bolt M8 × 25 mm (L: 1.0 in.)
(B) Gasket
(C) Exhaust pipe

4. Remove the two (2) M8 × 25 mm (L: 1.0 in.) bolts **(Fig. 3, (A))** that secure the exhaust pipe **(Fig. 3, (C))** to the muffler.

NOTE:

●The exhaust pipe is sealed to the muffler with a metal gasket **(Fig. 3, (B))**.

■ Exhaust Pipe & Muffler

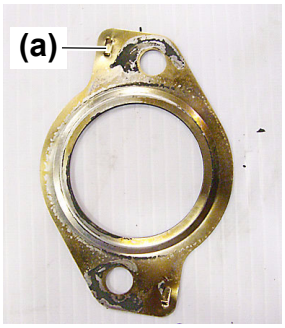

Fig. 4



Fig. 5

* Photo **(Fig. 4)** shows the muffler side.
* Photo **(Fig. 5)** shows the back side.

(a) Dented mark

IMPORTANT

- The face and back sides of the gasket are different. When installed, the face having the dented mark (a) should be positioned on the muffler side **(Fig. 4)**.

Exhaust Pipe & Muffler

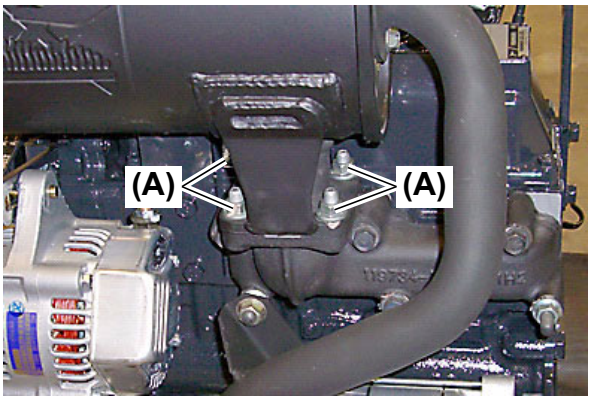

Fig. 6

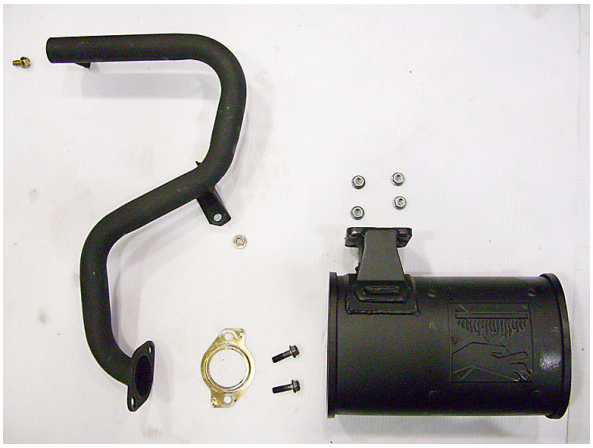

Fig. 7

(A) Nut

* Photo **(Fig. 7)** shows the disassembled exhaust pipe and muffler.

5. Remove the four (4) nuts **(Fig. 6, (A))** that secure the muffler to the exhaust manifold.

27. Engine Control Cable

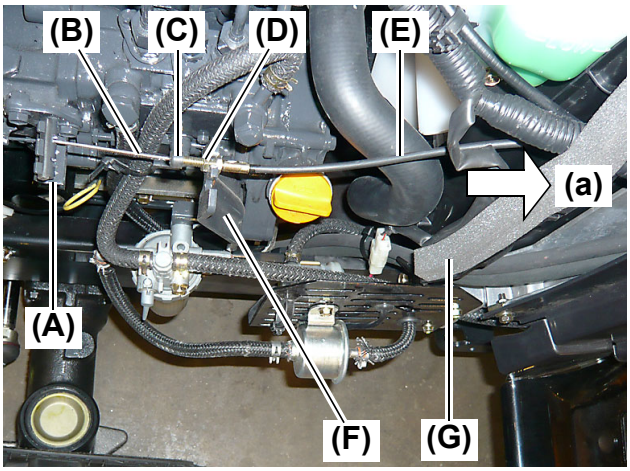

Fig. 1

(A) Stopper rubber
(B) Inner wire
(C) Cable cap
(D) Nut
(E) Engine control cable
(F) Holder
(G) Sponge
(a) Backward the machine body

1. Remove the stopper rubber **(Fig. 1, (A))** and then disconnect the inner wire **(Fig. 1, (B))**.

2. Remove the cable cap **(Fig. 1, (C))**.

3. Remove the nut **(Fig. 1, (D))** and then disconnect the engine control cable **(Fig. 1, (E))** from the holder **(Fig. 1, (F))**.

4. Strip off the upper half of the seal **(Fig. 1, (G))**. Pull out the cable **(Fig. 1, (E))** toward the rear of machine body.

■ Engine Control Cable

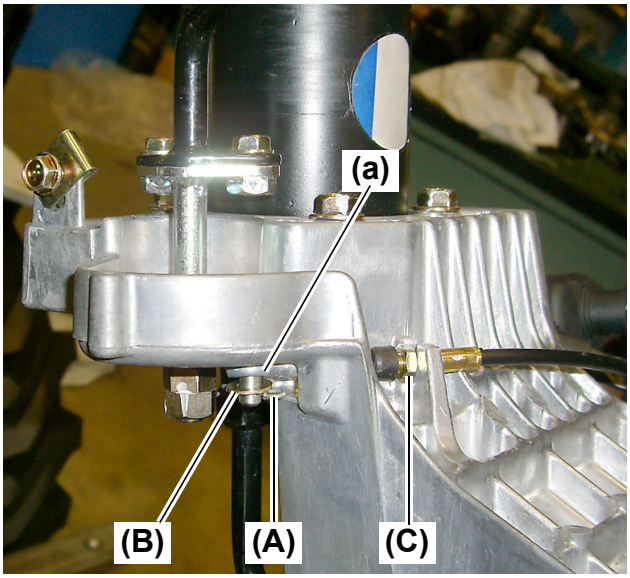

Fig. 2

(A) Snap pin
(B) Washer
(C) Nut

5. Remove the snap pin **(Fig. 2, (A))** and washer **(Fig. 2, (B))** under the accelerator lever. Remove the eyelet **(Fig. 2, (a))** of the engine control cable from the pin.

6. Remove the nut **(Fig. 2, (C))**. Disconnect the engine control cable **(Fig. 1, (E))** (See page 10-146).

■ Engine Control Cable

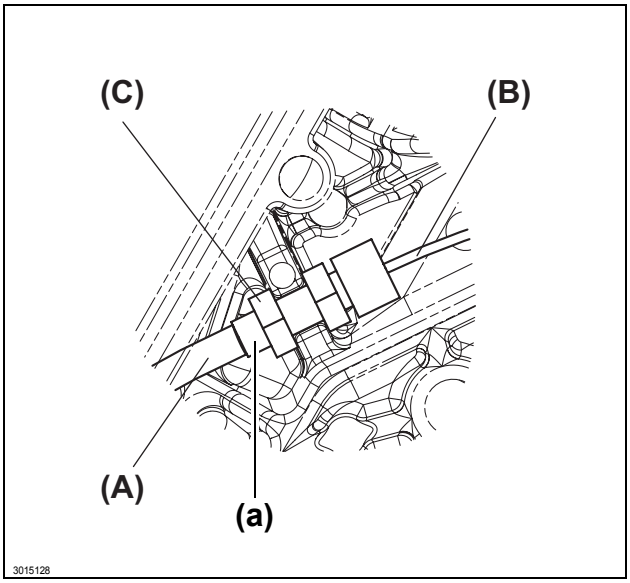

Fig. 3

(A) Outer cable
(B) Engine control inner cable
(C) Nut
(a) Threaded portion

7. Install and fix the engine control cable **(Fig. 3, (B))** on the lever side with the nut **(Fig. 3, (C))** positioned on the threaded portion **(Fig. 3, (a))** of the outer cable **(Fig. 3, (A))**.

■ Engine Control Cable

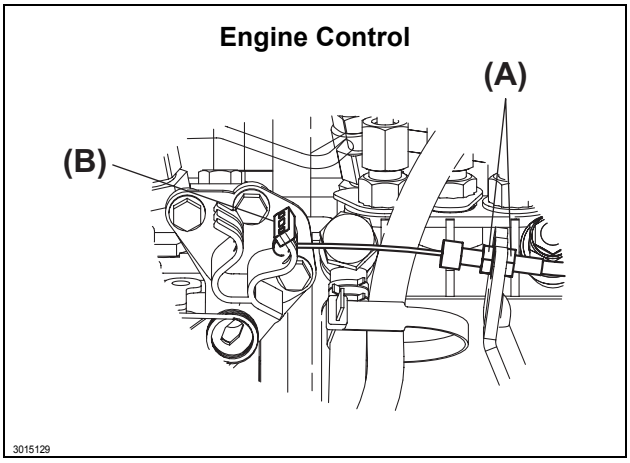

Fig. 4

(A) Adjust nut
(B) Stopper rubber

8. Install the engine control cable while adjusting the adjust nut **(Fig. 4, (A))** on the engine side so that the engine runs at the specified max. 3400 RPM with the accelerator lever fully opened. At this time, remember to install the stopper rubber **(Fig. 4, (B))**.
   The barrel end of the cable is positioned to the innermost slot of the engine control bracket.
   See Chapter 9. MISCELLANEOUS, "4. Accelerator / Throttle Adjustment" for throttle adjustment and routing of cable.

28. Engine Control Lever

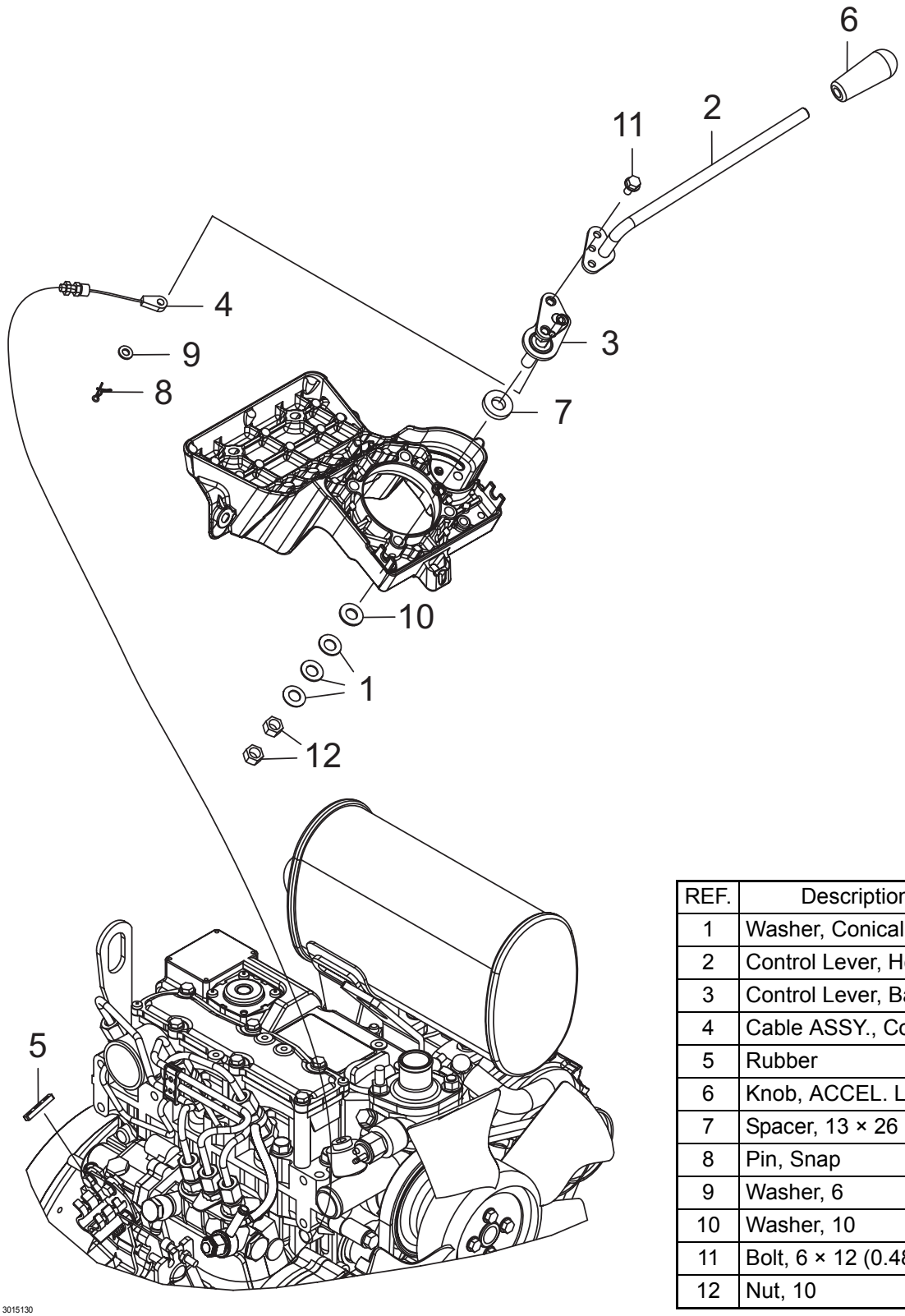

REF.	Description	Q'TY.
1	Washer, Conical 10	3
2	Control Lever, Head	1
3	Control Lever, Base	1
4	Cable ASSY., Control	1
5	Rubber	1
6	Knob, ACCEL. Lever	1
7	Spacer, 13 × 26 × 5	1
8	Pin, Snap	1
9	Washer, 6	1
10	Washer, 10	1
11	Bolt, 6 × 12 (0.48 in.)	2
12	Nut, 10	2

Fig. 1

■ Engine Control Lever

1. Disconnect the engine control cable **(Fig. 1, (Ref. #4))** (See page 10-150).

■ Engine Control Lever

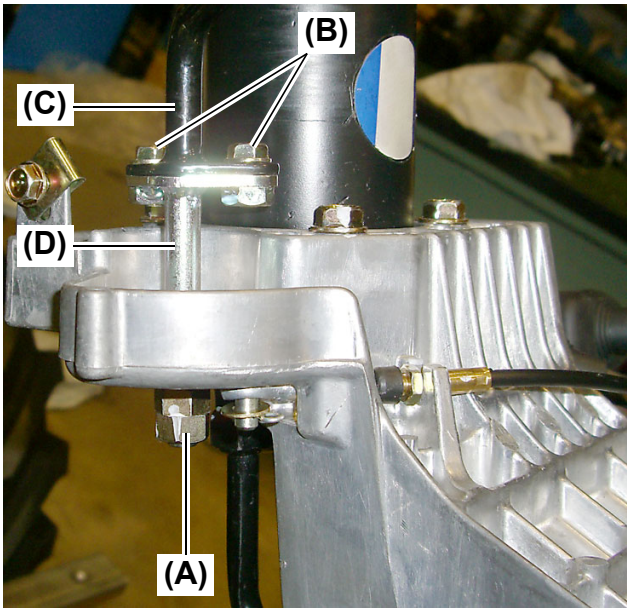

Fig. 2

(A) Two (2) nuts, M10
(B) Bolts, M6 × 12 mm (L: 0.48 in.)
(C) Engine control lever
(D) Engine control lever base

2. Remove the two (2) M6 × 12 mm (L: 0.48 in.) bolts **(Fig. 2, (B))** and then disconnect the engine control lever **(Fig. 2, (C))**.

3. Loosen the two (2) M10 nuts **(Fig. 2, (A))** serving as a double nut.

NOTE:

●Only loosen the nuts **(Fig. 2, (A))**. Failure to do so will not allow the lever to be removed.

4. In order to avoid losing the three (3) conical washers and one (1) washer, slowly unscrew the M10 nuts **(Fig. 2, (A))** and pull out the engine control lever base **(Fig. 2, (D))** and the spacer upward.

NOTE:

●Tightening torque for assembling: 18.1 to 23.9 ft•lbs (24.5 to 32.4 N•m)

■ Engine Control Lever

<Disassembled parts of the engine control lever base>

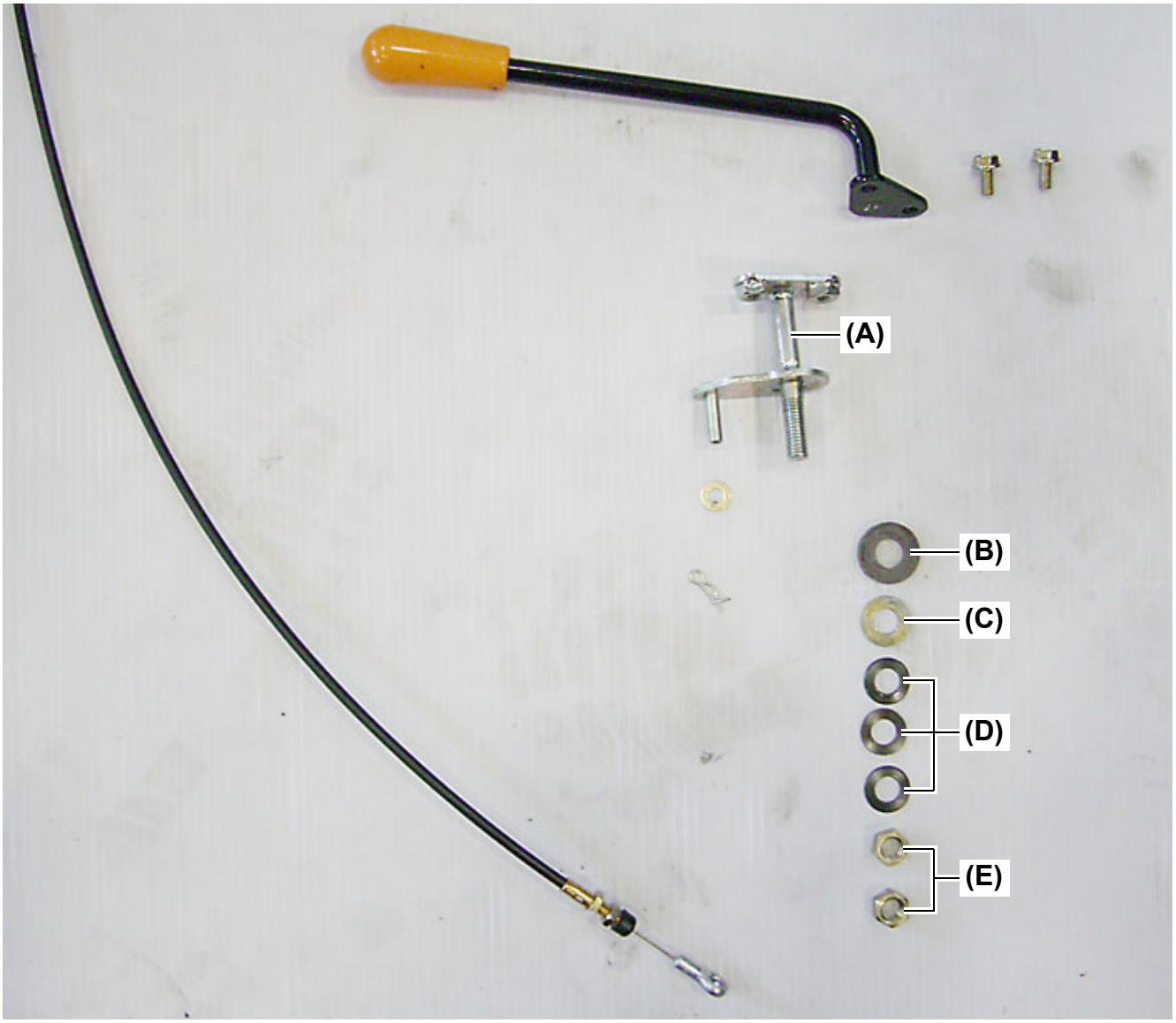

Fig. 3

(A) Engine control lever base
(B) Spacer
(C) Washer
(D) Conical washer
(E) Nut M10

■ Engine Control Lever

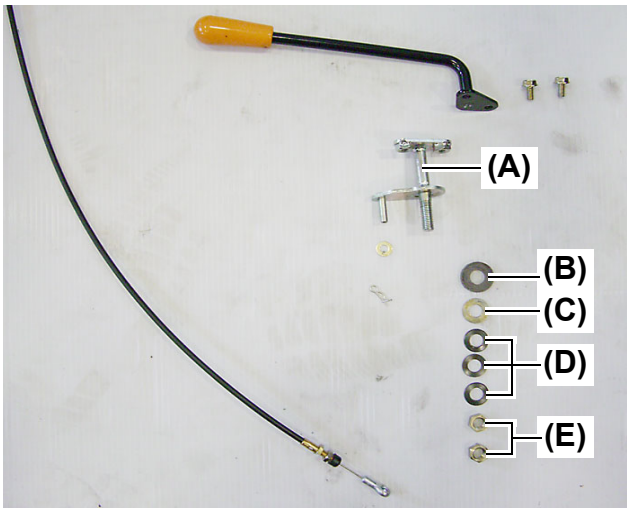

Fig. 4

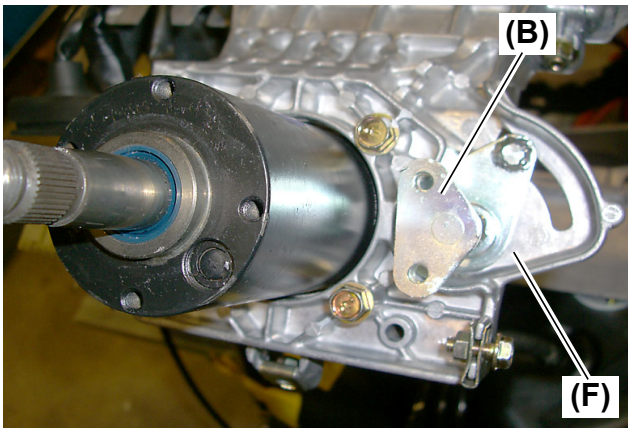

Fig. 5

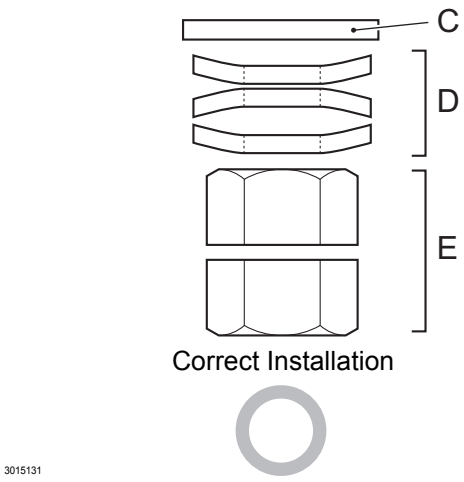

Fig. 6

(A) Engine control lever base
(B) Spacer
(C) Washer
(D) Conical washers
(E) M10 nuts
(F) Steering bracket

5. For installation, observe the following point:

⚠ WARNING

- **The engine control lever base (Fig. 4, (A)), spacer (Fig. 4, 5, (B)), washer (Fig. 4, (C)), conical washers (Fig. 4, (D)), M10 nuts (Fig. 4, (E)) and steering bracket (Fig. 5, (F)) must not be oiled. Before installing them, remove any oil from them.**
- **The spacer (Fig. 4, 5, (B)) should be installed between the engine control lever base (Fig. 4, (A)) and the steering bracket (Fig. 5, (F)).**
- **Assemble the washer (Fig. 6, (C)), conical washers (Fig. 6, (D)) and M10 nuts (Fig. 6, (E)) in the correct orientation and order according to Fig. 6.**
- **Tighten the M10 nuts (Fig. 6, (E)) so that the operating force at the end of the accelerator lever is 28.9 ± 7.2 ft•lbs (39.2 ± 9.8 N•m).**

29. Engine



Fig. 1

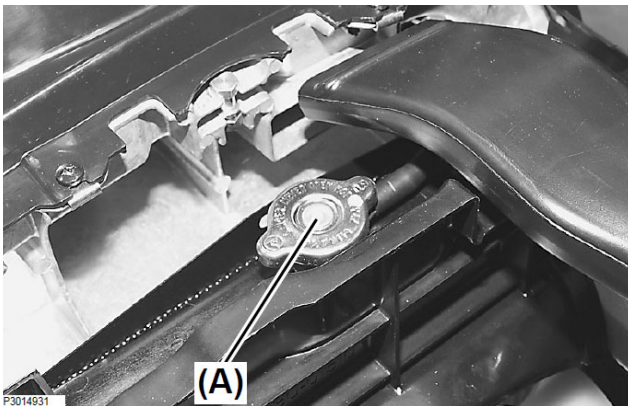

Fig. 2

(A) Radiator cap

⚠ CAUTION

Avoid injury.

- **ALWAYS allow radiator to cool before removing the radiator cap. The radiator will be hot and can cause burns. When the radiator cap is removed, pressure build-up in the cooling system can cause the coolant to spray out explosively.**
- **ALWAYS shut the engine down and allow it to cool.**
- **Only remove the radiator cap when the radiator and the engine are sufficiently cool such that they can be touched with bare hands.**
- **Loosen the radiator cap carefully to the first stop, allowing excessive pressure to escape. Only then remove the radiator cap.**

1. Park the tractor on a flat level surface. Chock the rear wheels.

2. Allow the engine to cool off.

3. Remove the lower dash screen and disconnect the negative battery cable from the negative battery terminal.

4. Open hood and disconnect the main wire harness from the hood. Remove the hood assembly and set off to the side.

5. Cover the radiator cap **(Fig. 2, (A))** with a couple of shop towels. Carefully open the radiator cap **(Fig. 2, (A))** to the first notch to relieve all the pressure in the cooling system.

■ Engine

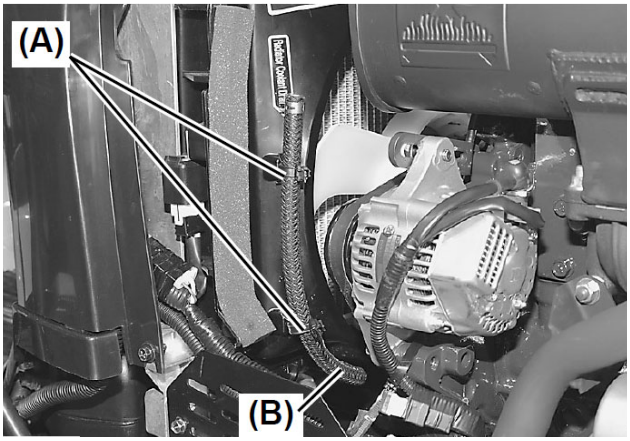

Fig. 3

(A) Drain hose clamps
(B) Drain hose

NOTE:

●For refilling the coolant, See "Chapter 14 in the *Operator's Manual*"

6. Place a drain pan underneath the drain hose **(Fig. 3, (B))**.

7. Remove the two (2) drain hose clamps **(Fig. 3, (A))** on the drain hose **(Fig. 3, (B))** of the radiator.

8. Allow the coolant system to drain completely.

9. Remove the two (2) bolts and the hose to remove the reserve tank. Drain the coolant from the reserve tank.

10. Reinstall the reserve tank. And plug the drain hose **(Fig. 3, (B))**.

■ Engine

11.Disconnect the hour meter cable (See page 10-110, "19. Hour Meter Cable").

■ Engine

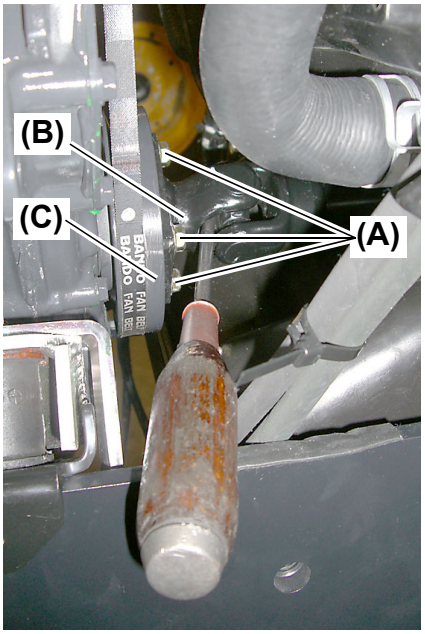

Fig. 4

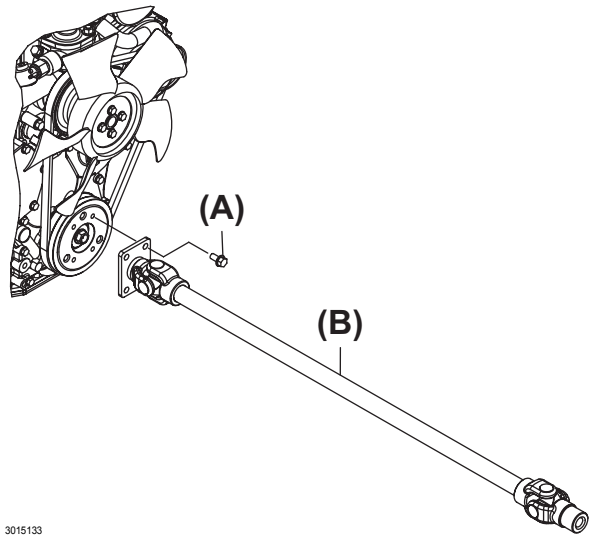

Fig. 5

(A) Bolt M8 × 16 mm (L: 0.64 in.)
(B) Drive shaft
(C) Pulley

12.Place a large screw driver or pry bar through the drive shaft coupler to lock the drive shaft.

13.Remove the four (4) M8 × 16 mm (L: 0.64 in.) bolts **(Fig. 4, 5, (A))** that secure the drive shaft **(Fig. 4, 5, (B))** to the engine crankshaft V-pulley **(Fig. 4, (C))**.

NOTE:

- Inserting a screw driver, etc. into the universal joint section of the drive shaft **(Fig. 4, 5, (B))** blocks rotation of the pulley **(Fig. 4, (C))**. This can make work easier.
- The drive shaft **(Fig. 4, 5, (B))** cannot be removed.

■ Engine

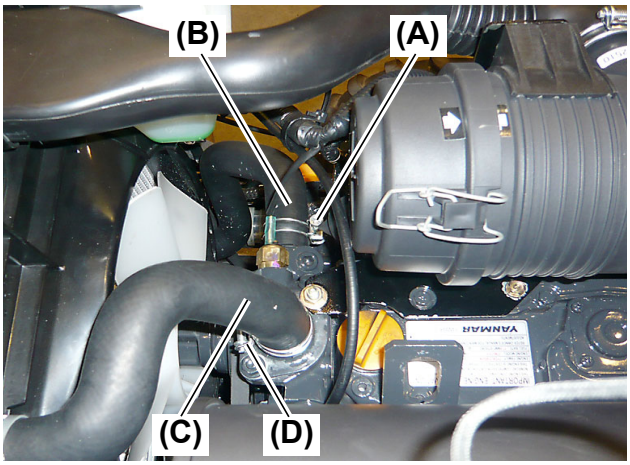

Fig. 6

(A) Hose clamp for lower radiator hose
(B) Lower radiator hose
(C) Upper radiator hose
(D) Hose clamp for upper radiator hose

14. Remove the hose clamp **(Fig. 6, (A))** from the lower radiator hose. Remove the lower radiator hose **(Fig. 6, (B))** from the water pump assembly.

15. Remove the hose clamp for the upper radiator hose **(Fig. 6, (D))** and remove the upper radiator hose **(Fig. 6, (C))** from the thermostat cover.

■ Engine

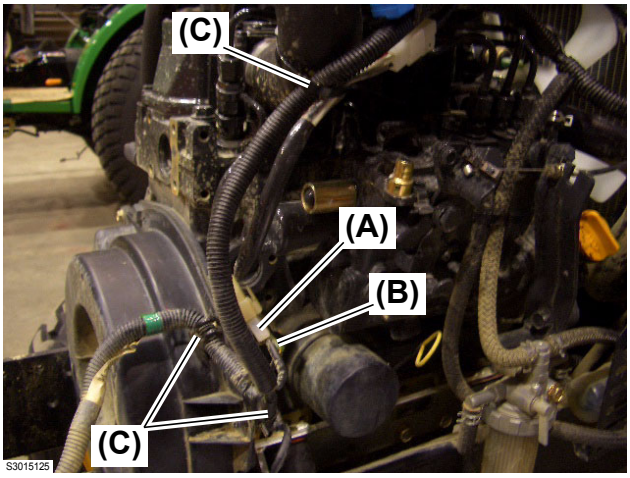

Fig. 7

(A) Connector for the glow plug
(B) Connector for the engine oil pressure switch
(C) Clip for the wire harness

16.Disconnect the glow plug wire harness connector **(Fig. 7, (A))** from the main harness connector.

17.Disconnect the connector for the engine oil pressure switch **(Fig. 7, (B))**.

18.Separate the main harness from the wire clips **(Fig. 7, (C))** at the three (3) locations shown.

■ Engine

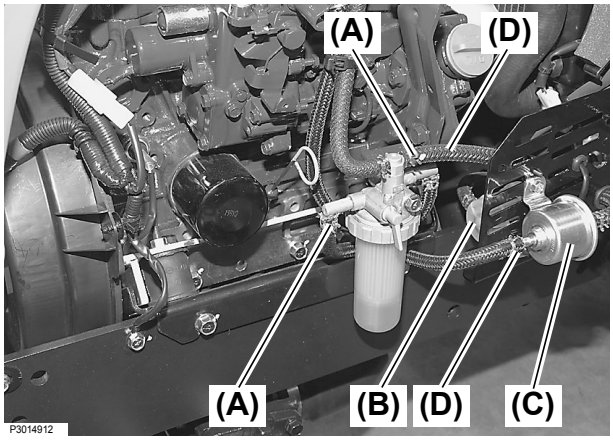

Fig. 8

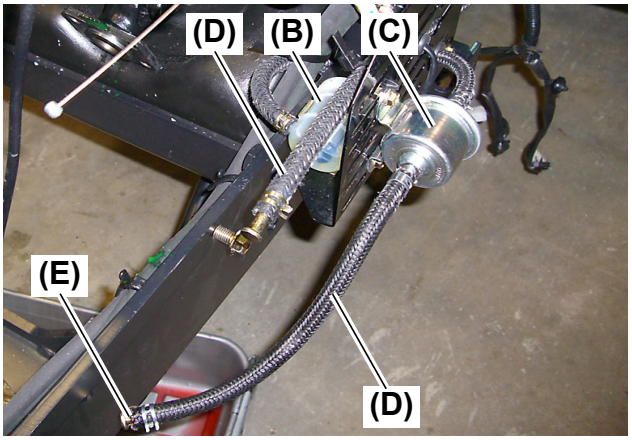

Fig. 9

(A) Hose clamp
(B) Fuel filter
(C) Fuel feed pump
(D) Fuel hose
(E) Pin, 0.32 in. (8 mm) dia.

19. Install a fuel line clamp to the fuel line from the tank to stop fuel flow from tank.

20. Remove the hose clamp **(Fig. 8, (A))** from the fuel hose **(Fig. 8, 9, (D))** at the fuel filter assembly **(Fig. 8, 9, (B))** from the fuel feed pump **(Fig. 8, 9, (C))**. Plug the line with a 0.32 in. (8 mm) pin **(Fig. 9, (E))**.

21. Remove the fuel hose clamp **(Fig. 8, (A))** from the fuel hose **(Fig. 8, 9, (D))** at the upper nipple of the fuel filter assembly. Plug the fuel hose with a 0.32 in. (8 mm) pin **(Fig. 9, (E))**.

⚠ WARNING

Avoid injury:
- **Remember that vapor from diesel fuel is explosive and flammable.**
- **NEVER smoke while handling the fuel.**
- **Keep the fuel away from open flames or sparks.**
- **Before servicing, stop the engine.**
- **Before servicing, allow the engine to cool off.**
- **Work in a well-ventilated area.**
- **Immediately wipe away spilled fuel.**

NOTE:
- Inserting a pin of 0.32 in. (8 mm) in diameter into the fuel hose followed by clamping with a hose clamp prevents fuel leakage. Fuel line pliers can also be used.
- Turning the lever horizontally (i.e., in a closed position) makes fuel leakage difficult.

■ Engine

Exploded view of the water separator

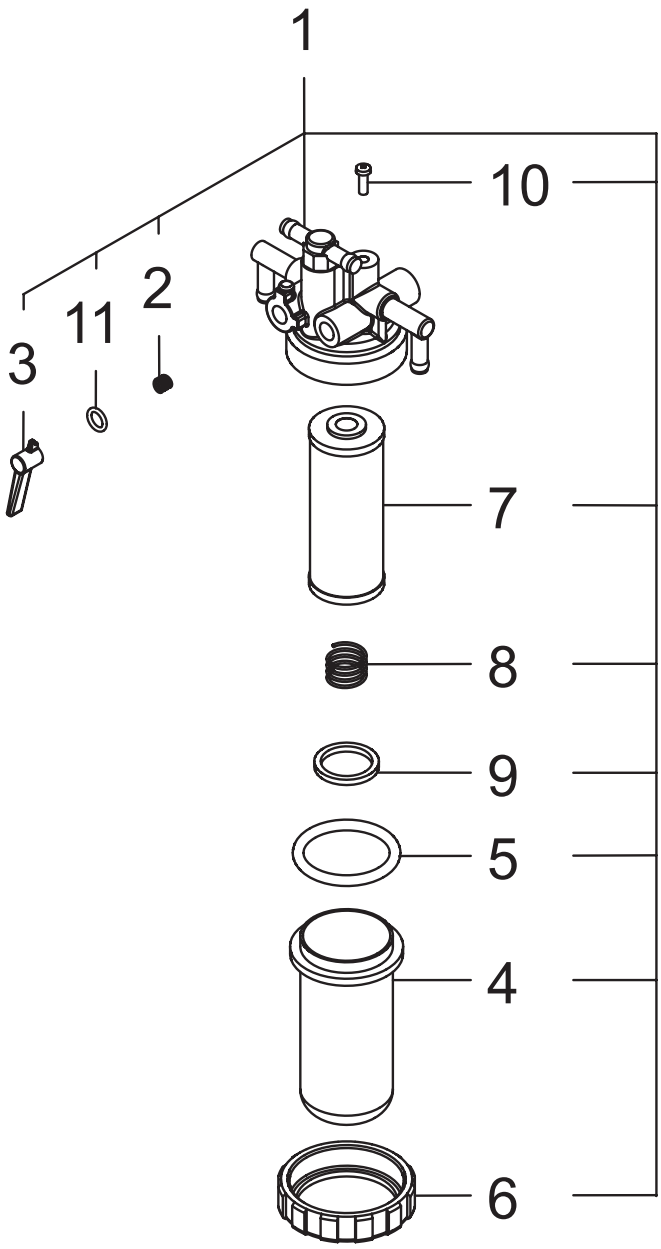

REF.	Description	Q'TY.
1	Filter ASSY., Fuel	1
2	Spring, Taper Valve	1
3	Lever	1
4	Cup	1
5	O-Ring	1
6	Ring, Retaining	1
7	Element, Filter	1
8	Spring, Screen	1
9	Float	1
10	Screw, Cock Handle M4	1
11	Packing, P 10a	1

Fig. 10

■ Engine

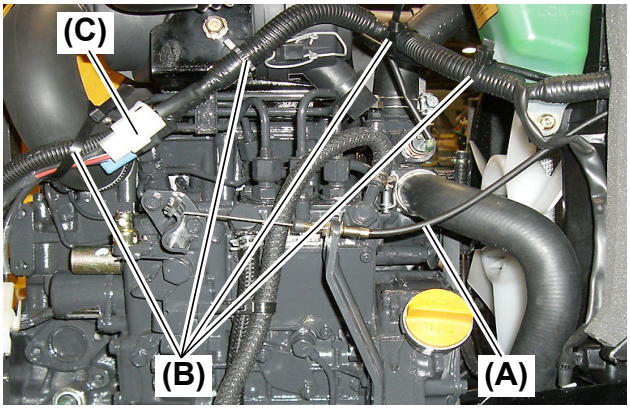

Fig. 11

(A) Engine control cable
(B) Harness cable clips
(C) Engine stop solenoid connector

22. Disconnect the engine control cable **(Fig. 11, (A))**.

23. Remove the harness cable clips **(Fig. 11, (B))**.

24. Disconnect the engine stop solenoid connector **(Fig. 11, (C))** from the main wire harness.

■ Engine

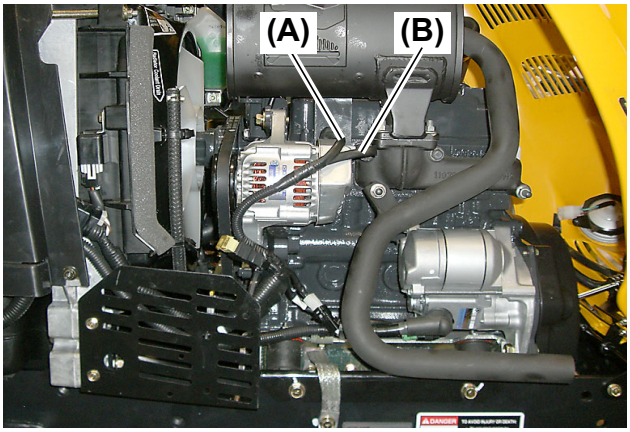

Fig. 12

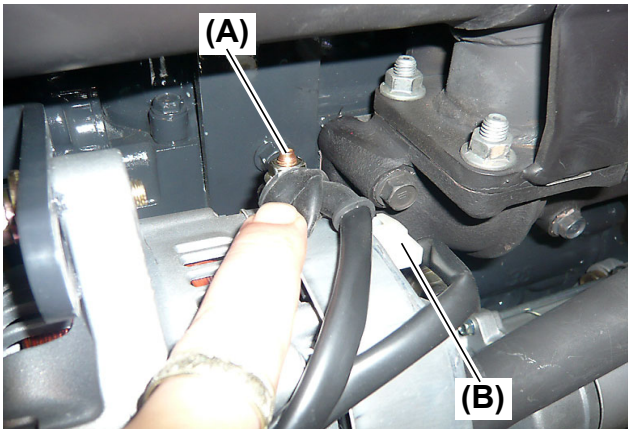

Fig. 13

(A) Alternator terminal
(B) Alternator connector

25.Disconnect the terminal **(Fig. 12, 13, (A))** and connector **(Fig. 12, 13, (B))** from the main harness to the alternator.

IMPORTANT

●The generator terminal **(Fig. 12, 13, (A))** is made of copper. Be careful of its tightening torque.
Tightening torque for installation: 4.4 to 7.2 ft•lbs (5.9 to 9.8 N•m)

NOTE:

●Make sure to disconnect the battery terminals. (First, disconnect the negative (–) terminal. Otherwise, a short circuit may occur. Next, disconnect the positive (+) battery cable.)

■ Engine

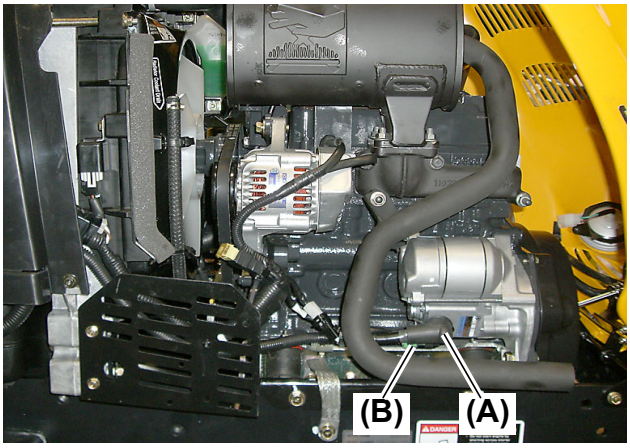

Fig. 14

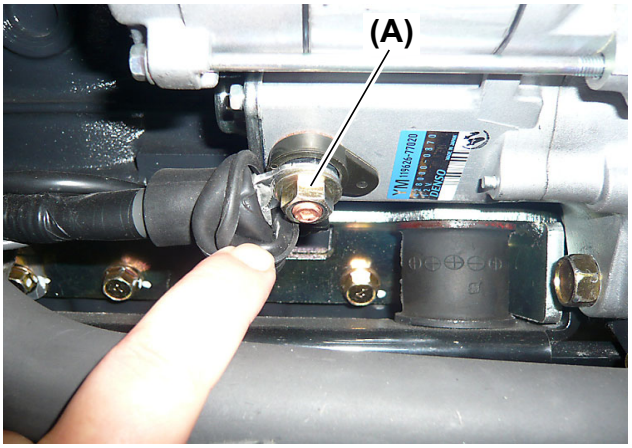

Fig. 15

(A) Positive (+) battery cable
(B) Starter motor connector

26. Disconnect the positive (+) battery cable **(Fig. 14, 15, (A))** and starter motor connector **(Fig. 14, (B))** from the starter motor.

IMPORTANT

- The positive (+) battery cable **(Fig. 14, 15, (A))** is made of copper. Be careful of its tightening torque.
- Tightening torque for installation: 5.4 to 7.2 ft•lbs (7.3 to 9.8 N•m)

■ Engine

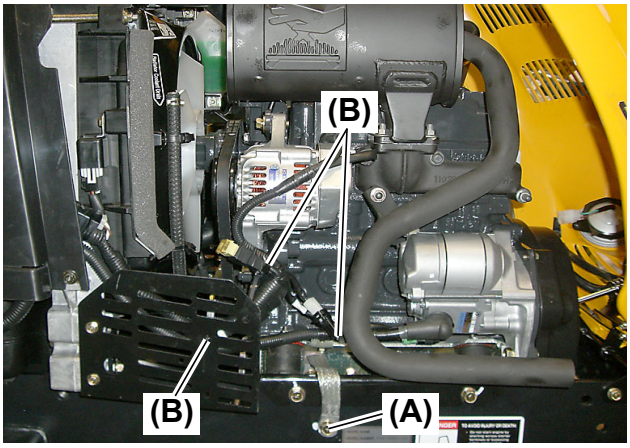

Fig. 16

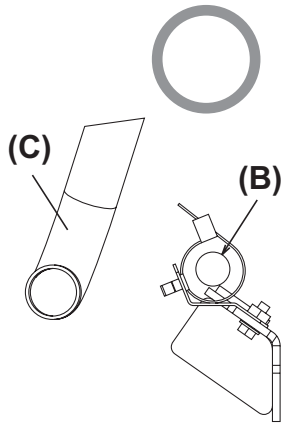

Fig. 17

(A) Engine body ground cable
(B) Harness clamps
(C) Exhaust pipe

27.Remove the engine body ground cable **(Fig. 16, (A))** from the main frame.

NOTE:

●Tightening torque for installation: 32.5 to 43.5 ft•lbs (44 to 59 N•m)

28.Remove the three (3) harness clamps **(Fig. 16, (B))**.

NOTE:

●Incorrect assembling of the harness clamps may interfere with the exhaust pipe.
See **Fig. 17** for proper positioning of harness clamps.

■ Engine

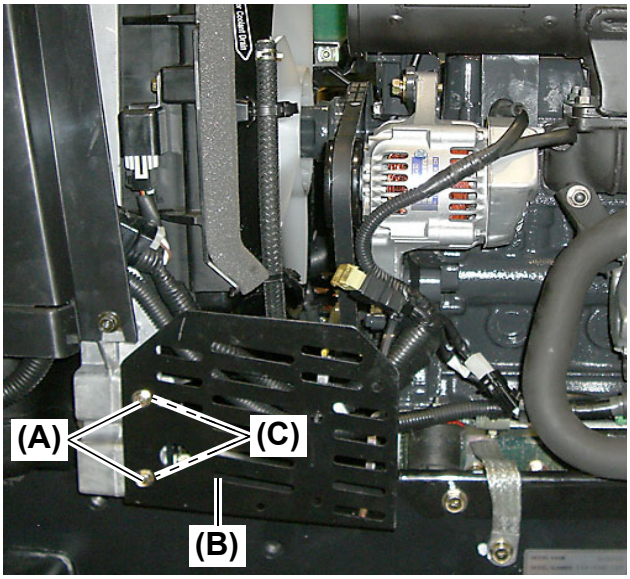

Fig. 18

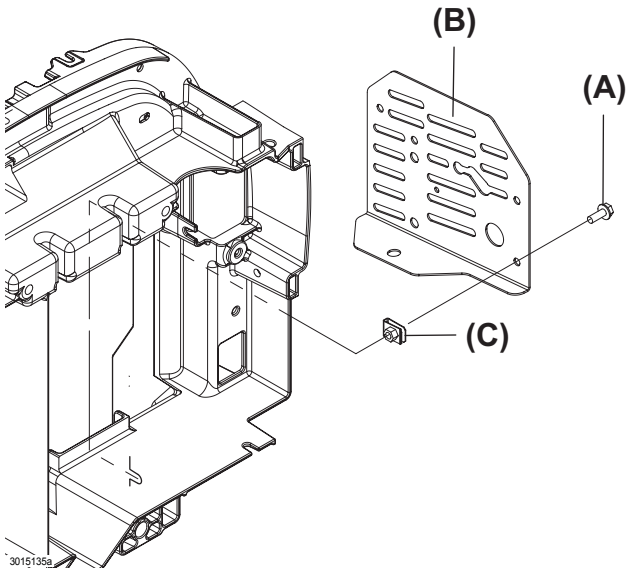

Fig. 19

(A) Bolt M6 × 16 mm (L: 0.64 in.)
(B) Fan belt cover
(C) Plate nut

29.Remove the left hand fan belt cover **(Fig. 18, 19, (B))**, by removing the two (2) M6 × 16 mm (L: 0.64 in.) bolts **(Fig. 18, 19, (A))**.

NOTE:

●Do not lose the plate nut **(Fig. 18, 19, (C))** located inside.

■ Engine

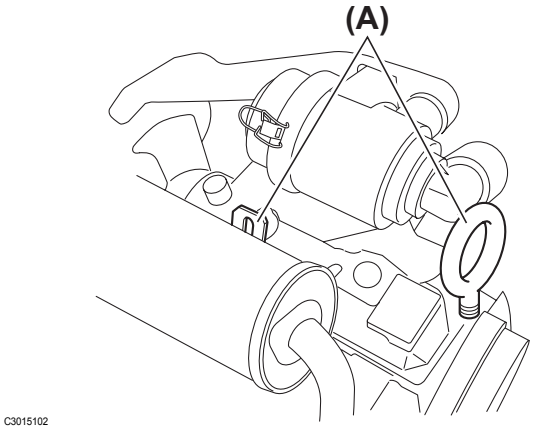

Fig. 20

(A) Lifting points / straps

30.Connect a suitable lifting point / strap to the two (2) lifting points / straps **(Fig. 20 (A))** provided on the Engine.

■ Engine

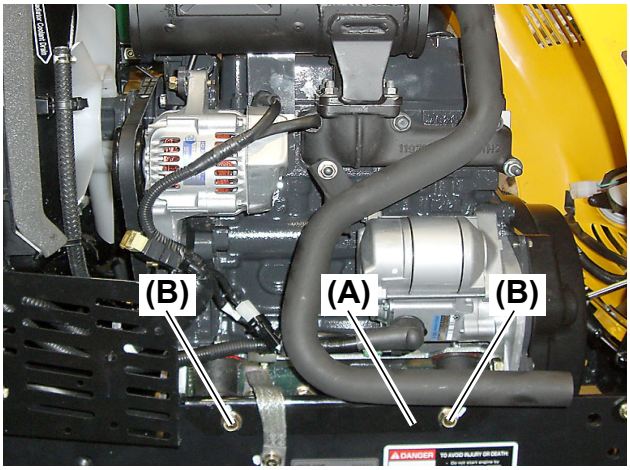

Fig. 21

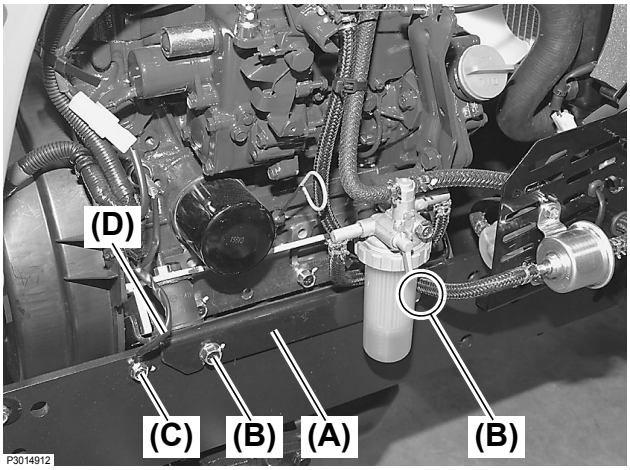

Fig. 22

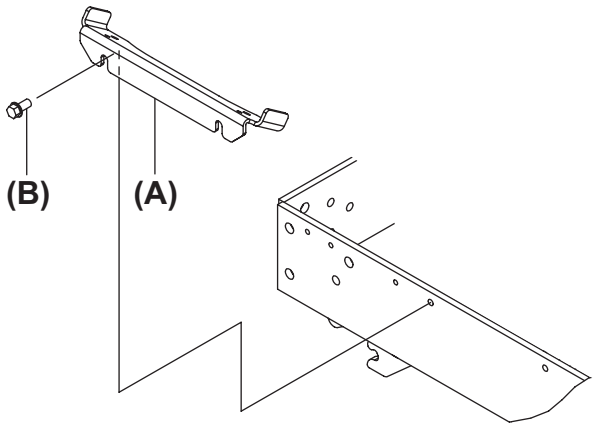

Fig. 23

(A) Mount stay
(B) Bolts, M10 × 20 mm (L: 0.8 in.)
(C) Bolt, M8 × 16 mm (L: 0.64 in.)
(D) Ground wire

31. Remove the two (2) M10 × 20 mm (L: 0.8 in.) bolts **(Fig. 21, 22, 23, (B))** that secure the mount stay **(Fig. 21, 22, 23, (A))** to the main frame on the left side.

32. Remove the M8 × 16 mm (L: 0.64 in.) bolt **(Fig. 22, (C))** that secures the main harness ground wire **(Fig. 22, (D))** to the main frame on the left side.

33. Remove the two (2) M10 × 20 mm (L: 0.8 in.) bolts **(Fig. 21, 22, 23, (B))** from that secure the mount stay **(Fig. 21, 22, 23, (A))** to the main frame on the right side.

NOTE:

● Tightening torque for installation: 32.5 to 43.5 ft•lbs (44 to 59 N•m)

■ Engine

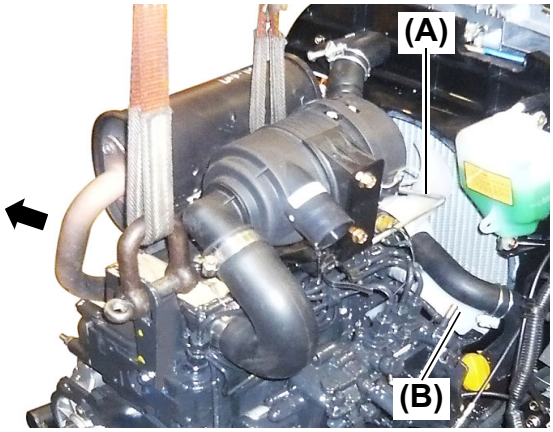

Fig. 24

(A) Cooling fan
(B) Radiator fan

IMPORTANT

●Disconnect the harness from the water temperature switch.

34.Be careful when lifting the engine, not to damage the cooling fan **(Fig. 24, (A))** and radiator fan **(Fig. 24, (B))**.

⚠CAUTION

●This work should be carried out by two (2) persons. Lift the engine with an engine hoist or crane.

■ Engine

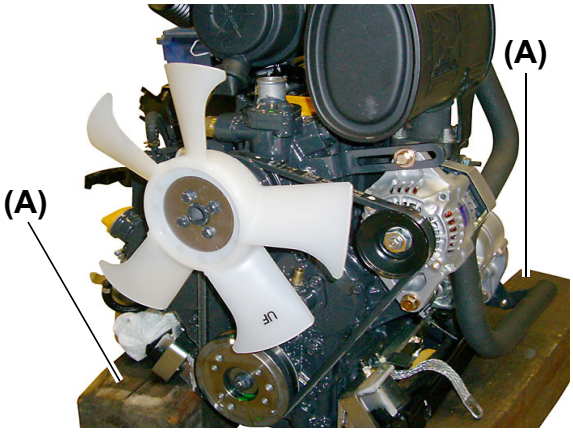

Fig. 25

(A) Wooden blocks

35. After engine is removed from tractor frame, either set engine on wooden blocks **(Fig. 25, (A))** to support engine off of the floor. Or mount engine to a suitable engine stand.

NOTE:

- The removed engine should be placed on wooden blocks in a stable manner. It is preferable to support the oil pan flange surface of the engine.

IMPORTANT

- Disconnect the harness from the water temperature switch.

30. Engine Mount

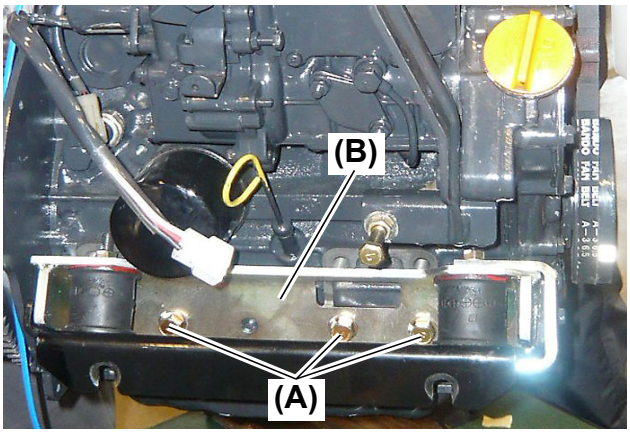

Fig. 1

(A) Bolt M10 × 20 mm (L: 0.8 in.)
(B) Mount stay

1. Remove the three (3) M10 × 20 mm (L: 0.8 in.) bolts **(Fig. 1, (A))** per side that secure the engine mount stay **(Fig. 1, (B))** to the engine block.

2. When installing the engine mount stay to the engine block, torque the M10 × 20 mm (L: 0.8 in.) bolts to 32.5 to 43.5 ft•lbs (44 to 59 N•m).

3. When replacing the rubber mounts, torque the retaining nuts to the normal torque setting per the hardware size.

4. Installation of the engine mount is the reverse order of removal.

■ Engine Mount

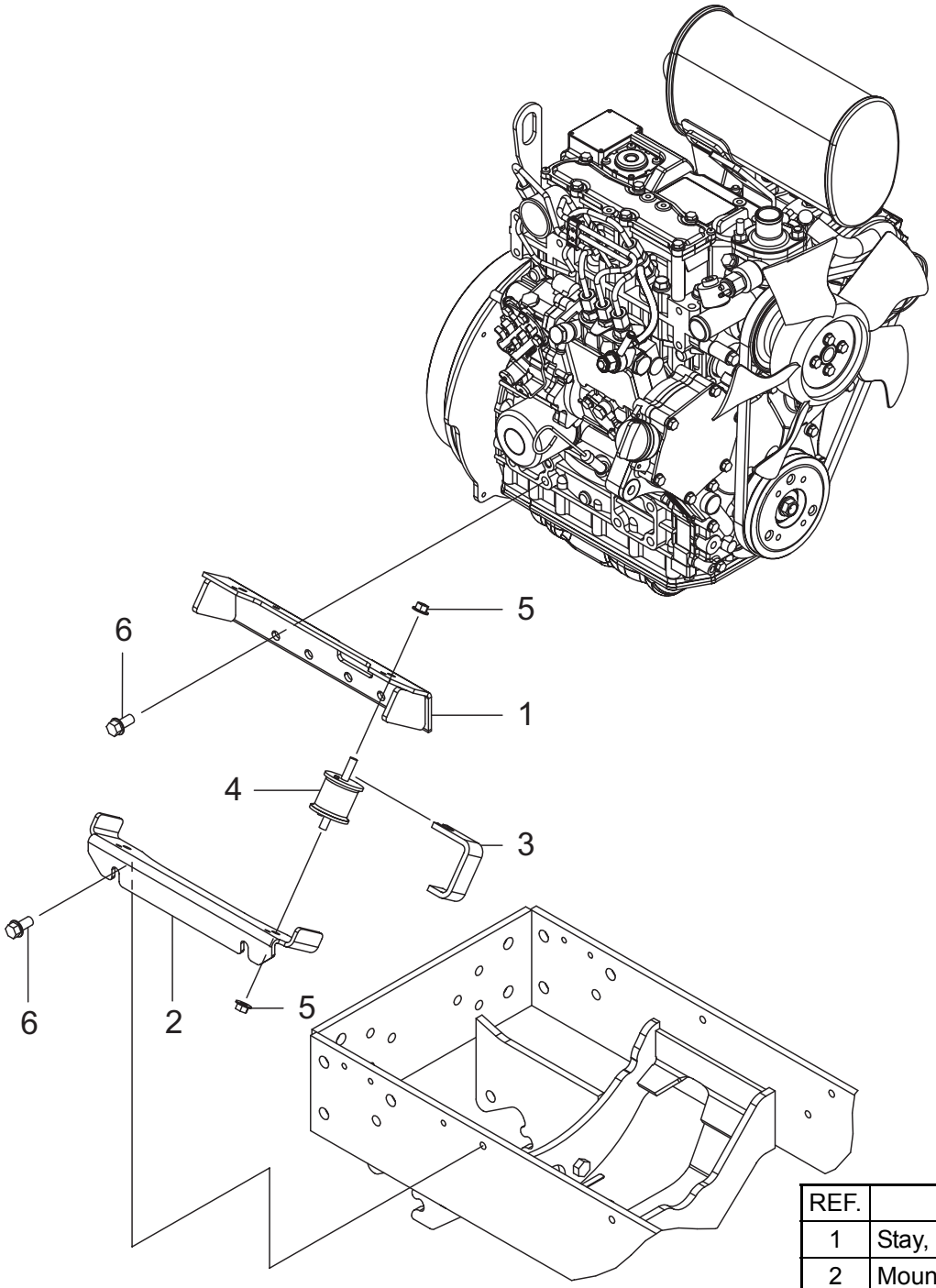

REF.	Description	Q'TY.
1	Stay, Engine	2
2	Mount Stay, Frame	2
3	Stopper	2
4	Rubber Mount	4
5	Nut, M8	8
6	Bolt, 10 × 20 (L: 0.8 in.)	10

fig. 2

5. The mount stay can be further disassembled.

IMPORTANT

●Do not forget to assemble the stopper.

31. Coolant Tank

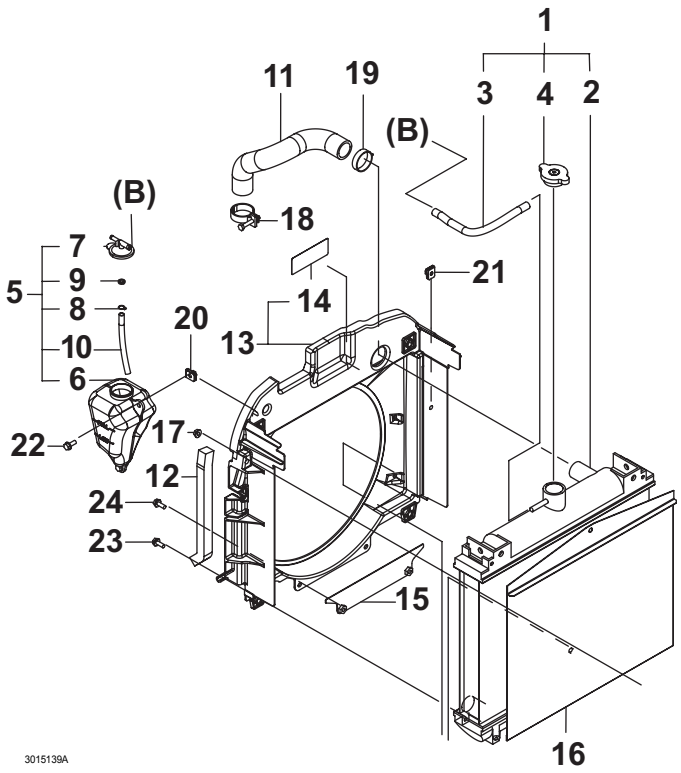

Fig. 1

REF.	Description	Q'TY.
1	Radiator ASSY.	1
2	Radiator	1
3	Hose, Tank	1
4	Cap, Radiator	1
5	Tank ASSY., Coolant	1
6	Tank, Coolant	1
7	Cap	1
8	Retainer, Hose	1
9	Gasket	1
10	Hose, 7 × 130	1
11	Hose, Cooling Water	1
12	Seal, Shroud Lower	2

REF.	Description	Q'TY.
13	Fan Shroud	1
14	Label, Warning, Fan	1
15	Plate ASSY., Shroud	1
16	Screen, Radiator	1
17	Nut, M6	2
18	Band, Hose 38	2
19	Clip, Hose 31.0	2
20	Nut, M6 Plate	2
21	Nut, M6 Plate	1
22	Bolt, 6 × 16 (L: 0.64 in.)	2
23	Bolt, 6 × 16 (L: 0.64 in.)	4
24	Bolt, 6 × 16 (L: 0.64 in.)	2

■ Coolant Tank

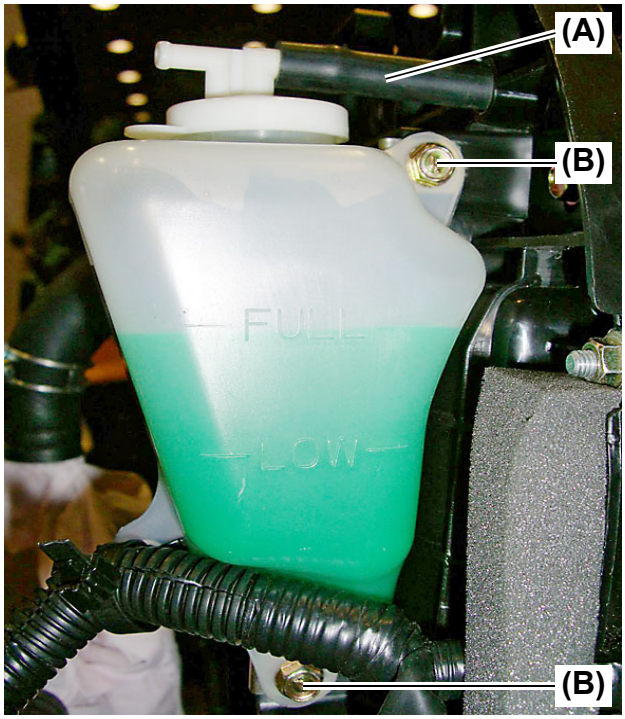

Fig. 2

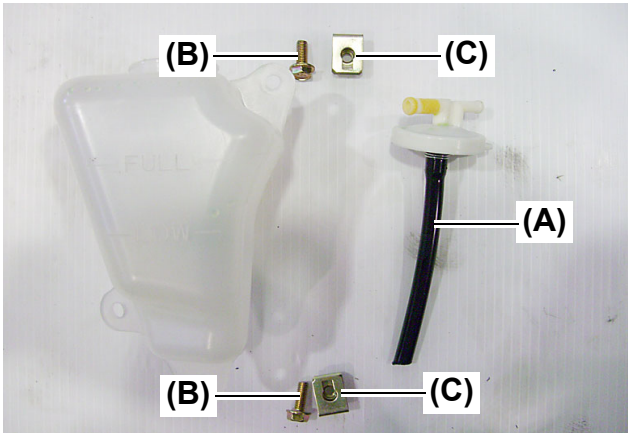

Fig. 3

(A) Rubber hose
(B) Bolts, M6 × 16 mm (L: 0.64 in.)
(C) Plate nuts

1. Disconnect the rubber hose **(Fig. 2, 3, (A))**.

2. Remove the M6 × 16 mm (L: 0.64 in.) bolts **(Fig. 2, 3, (B))** together with the plate nuts **(Fig. 3, (C))**.

32. Fuel Filter and Fuel Feed Pump

⚠ WARNING

Avoid injury:
- **Remember that vapor from diesel fuel is explosive and flammable.**
- **NEVER smoke while handling the fuel.**
- **Keep the fuel away from open flames or sparks.**
- **Before servicing, stop the engine.**
- **Before servicing, allow the engine to cool off.**
- **Work in a well-ventilated area.**
- **Immediately wipe away spilled fuel.**

1. Remove the hose clamp from the fuel line at the bottom of the fuel tank.

2. Drain fuel from the fuel tank into an appropriate container.

■ Fuel Filter and Fuel Feed Pump

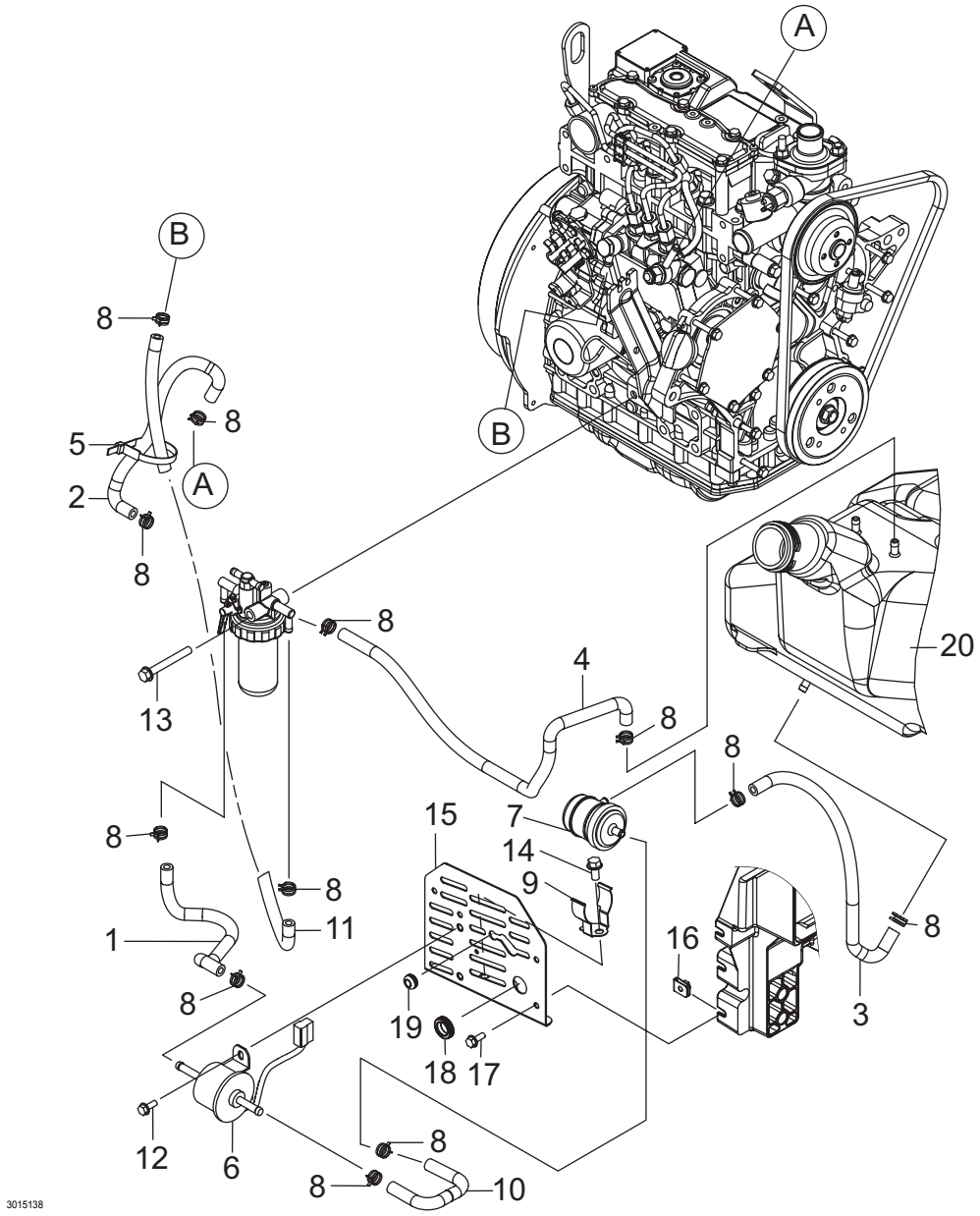

Fig. 1

REF.	Description	Q'TY.
1	Hose, Filter	1
2	Hose, Fuel	1
3	Hose	1
4	Hose, Fuel	1
5	Clamp, 200	1
6	Pump, Fuel Feed	1
7	Filter, Fuel Oil	1
8	Clamp, Hose 12	12
9	Clamp, Filter	1
10	Hose, 7.3 × 150	1

REF.	Description	Q'TY.
11	Hose, 7.3 × 330	1
12	Bolt, 6 × 16 (L: 0.64 in.)	2
13	Bolt, 8 × 65 (L: 2.6 in.)	1
14	Bolt, 8 × 16 (L: 0.64 in.)	1
15	Cover ASSY., LH, F-Belt	1
16	Nut, M6	2
17	Bolt, 6 × 16 (L: 0.64 in.)	2
18	Grommet, 16.0 × 2	1
19	Grommet, 8	1
20	Fuel Tank	1

■ Fuel Filter and Fuel Feed Pump

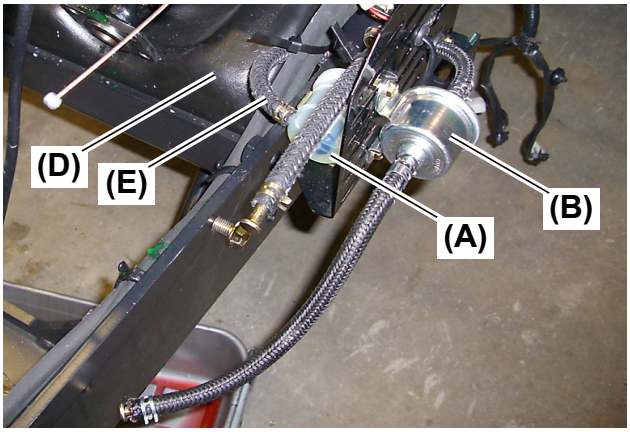

Fig. 2

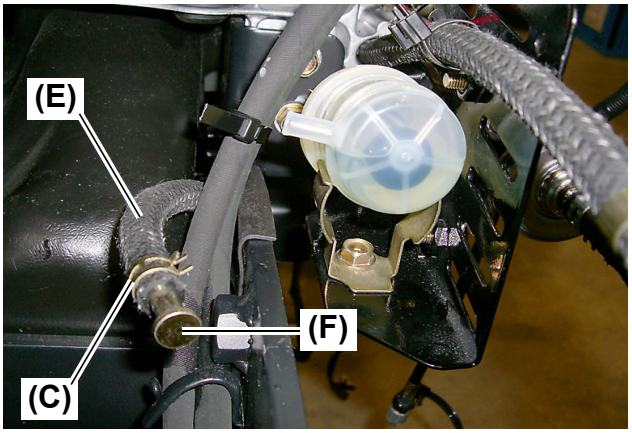

Fig. 3

(A) Fuel filter
(B) Fuel feed pump
(C) Hose clamp
(D) Fuel tank
(E) Fuel hose
(F) Pin, 0.32 in. (8 mm) dia.

3. Disconnect the fuel hose **(Fig. 2, 3, (E))** from the fuel filter **(Fig. 2, (A))**. Plug the fuel hose **(Fig. 2, 3, (E))** with a 0.32 in. (8mm) pin **(Fig. 3, (F))** or clamp with fuel line pliers.

4. Disconnect the other fuel hose **(Fig. 2, 3, (E))** to the fuel filter separator **(Fig. 2, (A))** and plug the fuel hose **(Fig. 2, 3, (E))** with a 0.32 in. (8mm) pin **(Fig. 3, (F))** or clamp with fuel line pliers.

IMPORTANT

- Install the fuel filter in the orientation shown in **Fig. 2**.

NOTE:

- In order to prevent fuel leakage, insert a pin **(Fig. 3, (F))** of 0.32 in. (8 mm) in diameter into the fuel hose **(Fig. 2, 3, (E))** and then clamp with a hose clamp **(Fig. 3, (C))** or clamp with fuel line pliers.

■ Fuel Filter and Fuel Feed Pump

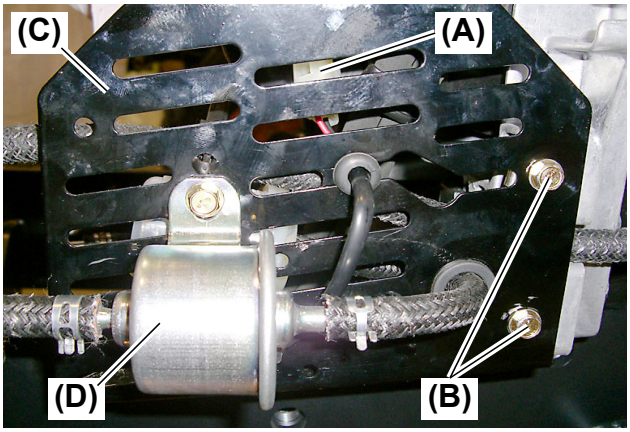

Fig. 4

(A) Feed pump connector (Located behind fan belt cover)
(B) Bolt M6 × 16 mm (L: 0.64 in.)
(C) Fan belt cover
(D) Fuel feed pump

5. Remove the two (2) M6 × 16 mm (L: 0.64 in.) bolts **(Fig. 4, (B))** that secure the left fan belt cover **(Fig. 4, (C))** to the column bracket.

6. Disconnect the fuel feed pump **(Fig. 4, (D))** from the feed pump connector **(Fig. 4, (A))**.

■ Fuel Filter and Fuel Feed Pump

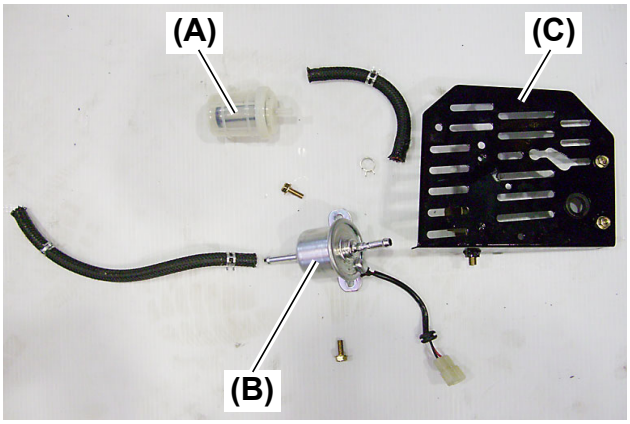

Fig. 5

(A) Fuel filter
(B) Fuel feed pump
(C) Fan belt cover

7. Slide the grommet for the fuel feed pump **(Fig. 5, (B))** wire over to remove from the left fan belt cover **(Fig. 5, (C))**.

8. The fuel filter **(Fig. 5, (A))** can be serviced by removing the two (2) M6 × 16 mm (L: 0.64 in.) bolts that secure the left fan belt cover **(Fig. 5, (C))** to the column bracket.

NOTE:

- The fuel filter cannot be disassembled.
- Reassembly of the fuel pump and fuel filter is the reverse order of removal.

33. Radiator

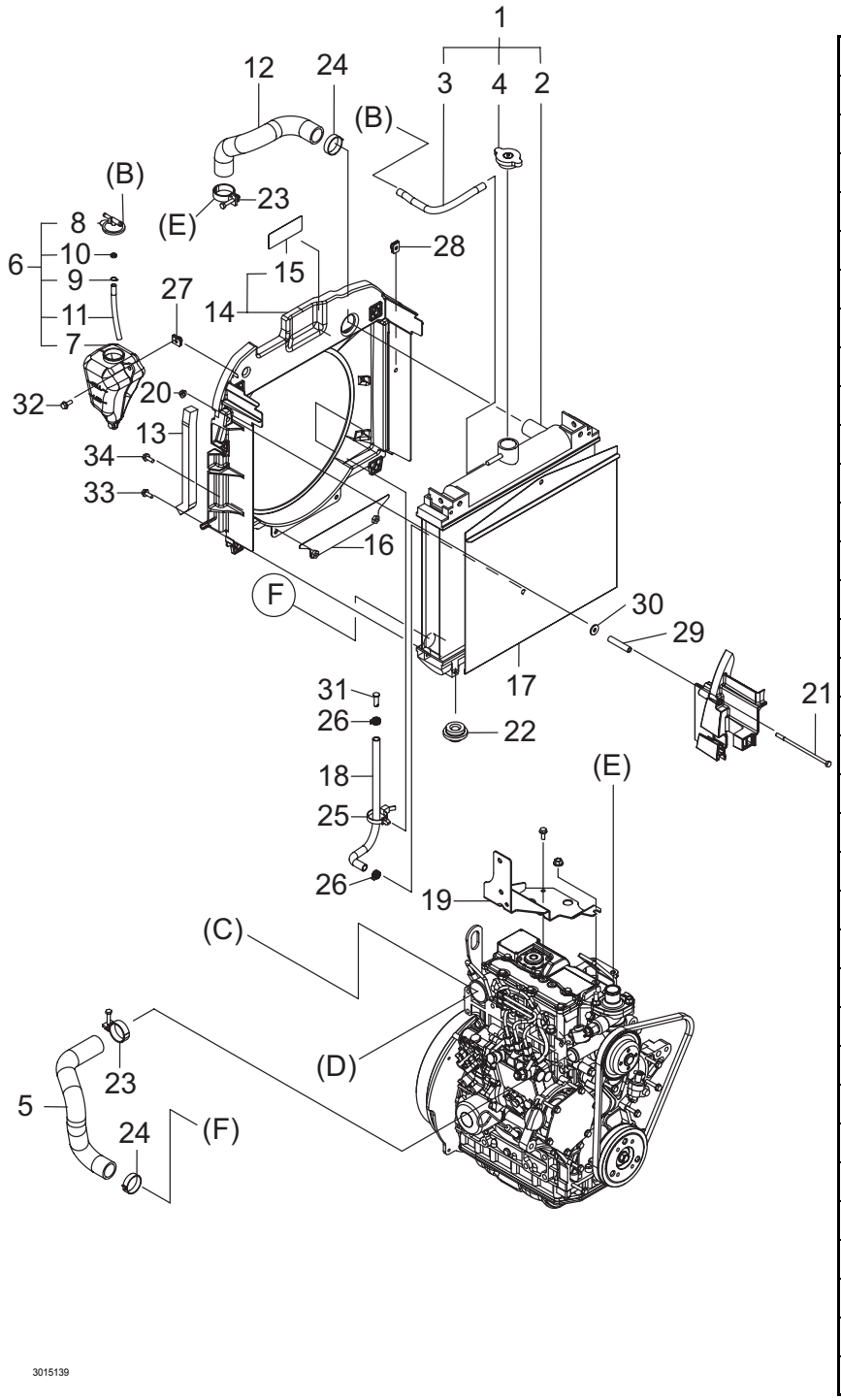

REF.	Description	Q'TY.
1	Radiator ASSY.	1
2	Radiator	1
3	Hose, Tank	1
4	Cap, Radiator	1
5	Pipe, Water	1
6	Tank ASSY., Coolant	1
7	Tank, Coolant	1
8	Cap	1
9	Retainer, Hose	1
10	Gasket	1
11	Hose, 7 × 130	1
12	Hose, Cooling Water	1
13	Seal, Shroud Lower	2
14	Fan Shroud	1
15	Label, Warning, Fan	1
16	Plate ASSY., Shroud	1
17	Screen, Radiator	1
18	Hose	1
19	Bracket, Air Cleaner	1
20	Nut, M6	2
21	Bolt M6 × 135 (L: 5.4 in.)	2
22	Rubber, Radiator	2
23	Band, Hose	2
24	Clip, Hose	2
25	Clamp	2
26	Clamp, Hose	2
27	Nut, M6	2
28	Nut, M6	1
29	Coller, 6.5 × 10 × 52	2
30	Washer, 6	2
31	Pin, 8 × 20	1
32	Bolt, 6 × 16 (L: 0.64 in.)	2
33	Bolt, 6 × 16 (L: 0.64 in.)	4
34	Bolt, 6 × 16 (L: 0.64 in.)	2

Fig. 1

■ Radiator

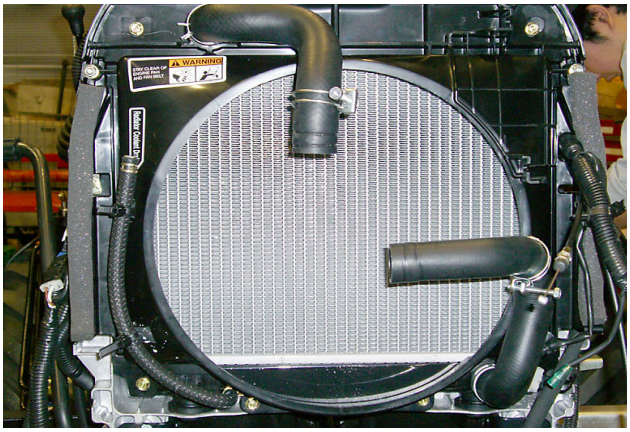

Fig. 2

1. Before working, thoroughly drain the coolant (See page 10-155, "29. Engine").

■ Radiator

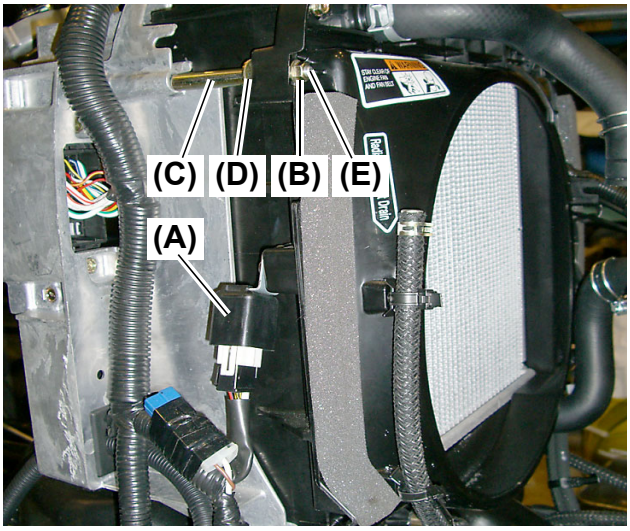

Fig. 3

(A) Relay
(B) Nut M6
(C) Collar
(D) Washer
(E) Bolt M6 × 135 mm (L: 5.4 in.)

2. Remove the relay **(Fig. 3, (A))** on the right side of the radiator.

3. Remove the M6 nut **(Fig. 3, (B))**. Then remove the collar **(Fig. 3, (C))**, washer **(Fig. 3, (D))** and M6 × 135 mm (L: 5.4 in.) bolt **(Fig. 3, (E))**.

■ Radiator

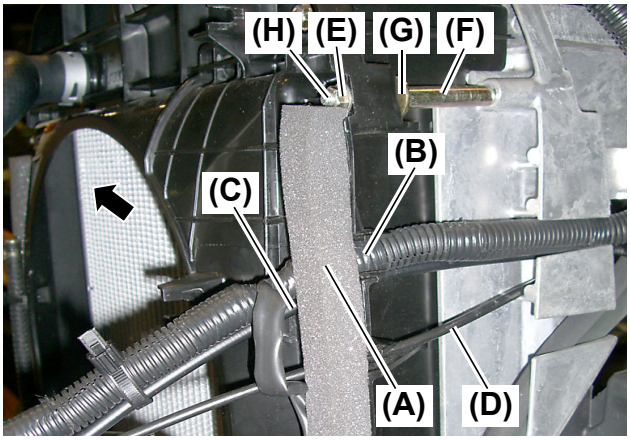

Fig. 4

(A) Seal, lower shroud
(B) Wire harnesses
(C) Hour meter cable
(D) Engine control cable
(E) Nut M6
(F) Collar
(G) Washer
(H) Bolt M6 × 135 mm (L: 5.4 in.)

4. Strip off the upper half of the lower shroud seal **(Fig. 4, (A))** on the left side of radiator. Then remove the wire harnesses **(Fig. 4, (B))**, hour meter cable **(Fig. 4, (C))** and engine control cable **(Fig. 4, (D))**.

IMPORTANT

- Remember where the individual wire harnesses and cables are routed. Drawing a sketch or labeling helps on reassembling.

5. Remove the M6 nut **(Fig. 4, (E))**. Then remove the collar **(Fig. 4, (F))**, washer **(Fig. 4, (G))** and M6 × 135 mm (L: 5.4 in.) bolts **(Fig. 4, (H))**.

■ Radiator

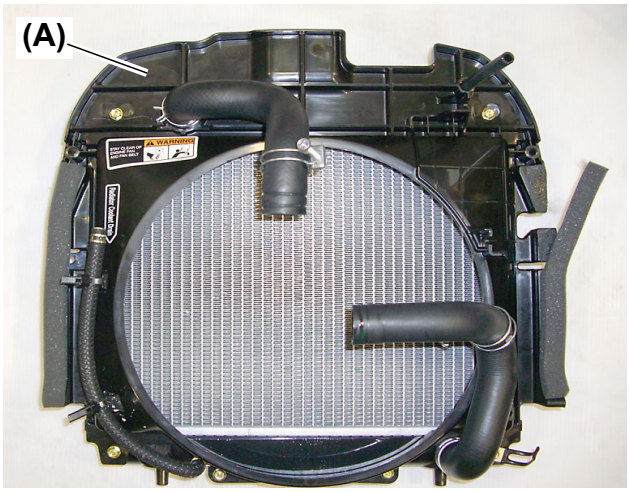

Fig. 5

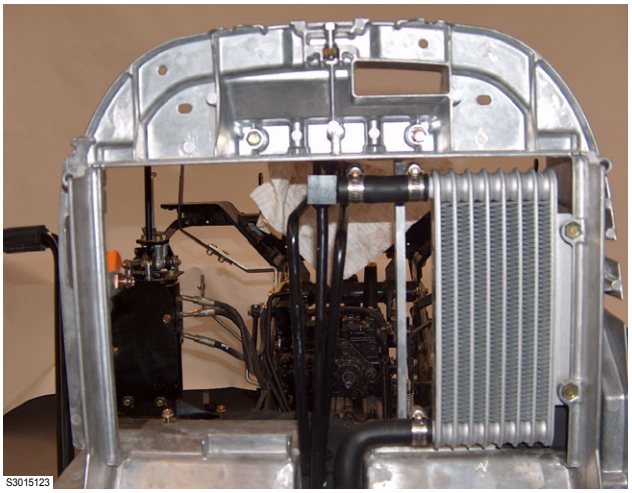

Fig. 6

(A) Radiator assembly

6. Remove the radiator assembly **(Fig. 5, (A))** by pulling it forward and at an angle upward.

NOTE:

●Disconnect all cooling hoses.

■ Radiator

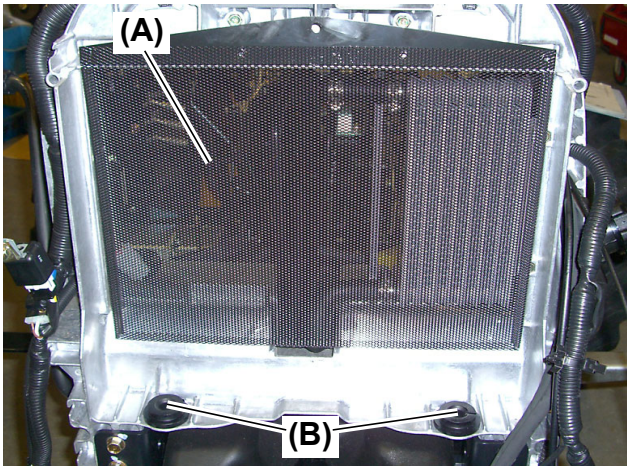

Fig. 7

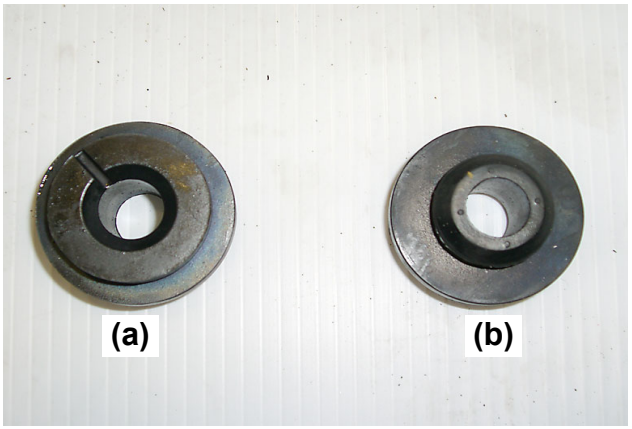

Fig. 8

(A) Radiator screen
(B) Radiator lower rubbers
(a) Top side
(b) Bottom side

7. Remove the radiator screen **(Fig. 7, (A))** and the two (2) radiator lower rubbers **(Fig. 7, (B))**.

NOTE:

- The top side and bottom side of the radiator lower rubber **(Fig. 7, (B))** are different as shown in the **Fig. 8** at right.
- The radiator screen **(Fig. 7, (A))** should be removed when disassembling the radiator assembly is started (after cooling water is drained).

■ Radiator

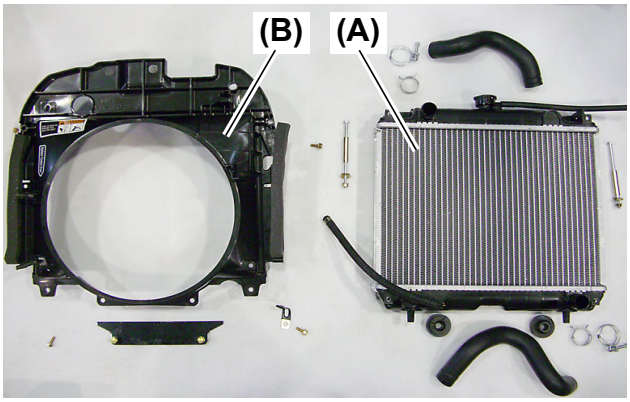

Fig. 9

(A) Radiator
(B) Fan shroud

8. The radiator assembly can be disassembled into two (2) sections, the radiator **(Fig. 9, (A))** and the fan shroud **(Fig. 9, (B))**.

9. If a problem has occurred with the radiator, take the radiator to a professional radiator shop for cleaning and repair. If the radiator cannot be repaired, replace it with a new service parts radiator.

10. Assembly of radiator components and installation of radiator into the tractor are the reverse order of removal and disassembly.

34. Power Steering Valve

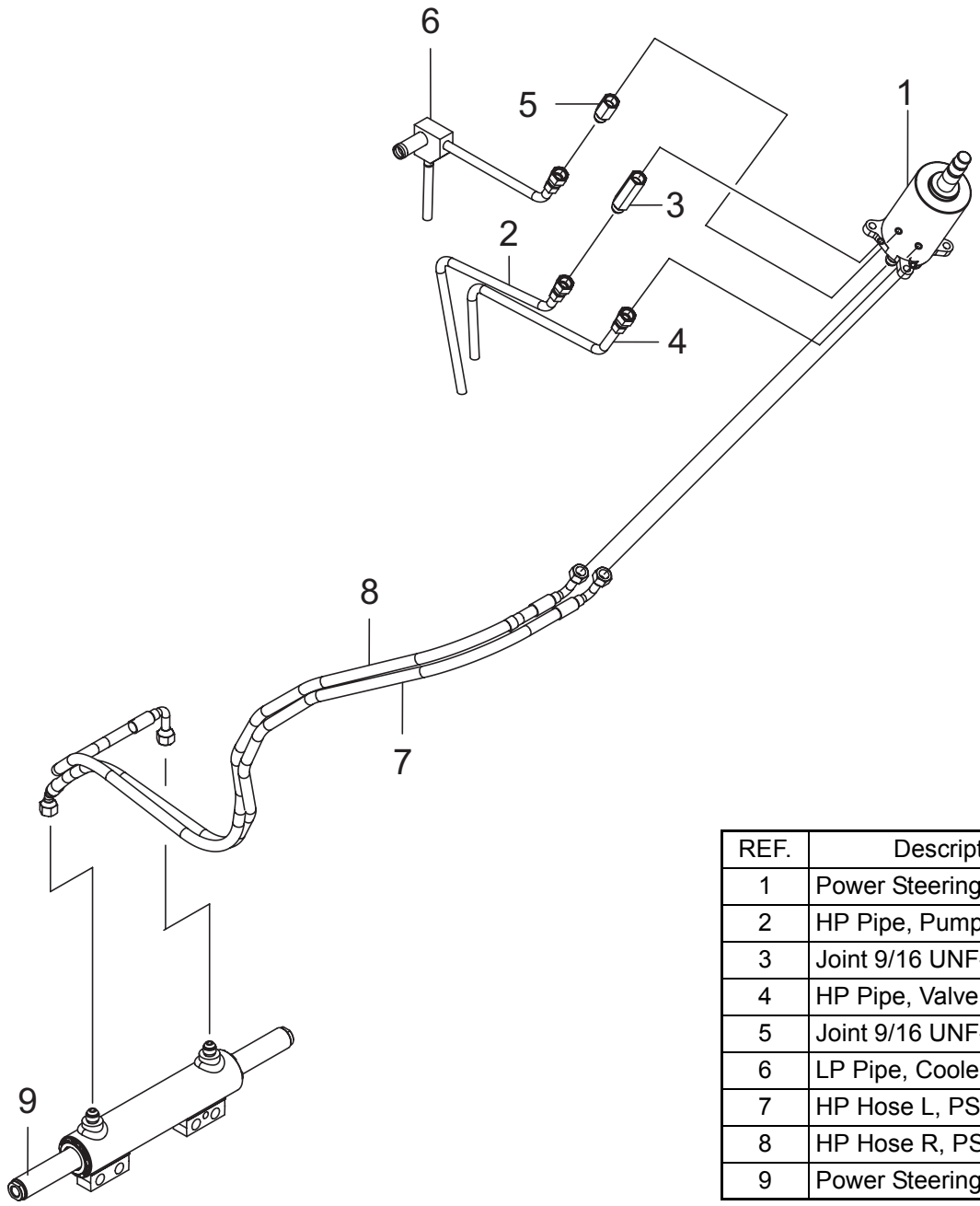

REF.	Description	Q'TY.
1	Power Steering Valve	1
2	HP Pipe, Pump	1
3	Joint 9/16 UNF-70	1
4	HP Pipe, Valve	1
5	Joint 9/16 UNF-40	1
6	LP Pipe, Cooler	1
7	HP Hose L, PST	1
8	HP Hose R, PST	1
9	Power Steering Cylinder	1

Fig. 1

■ Power Steering Valve

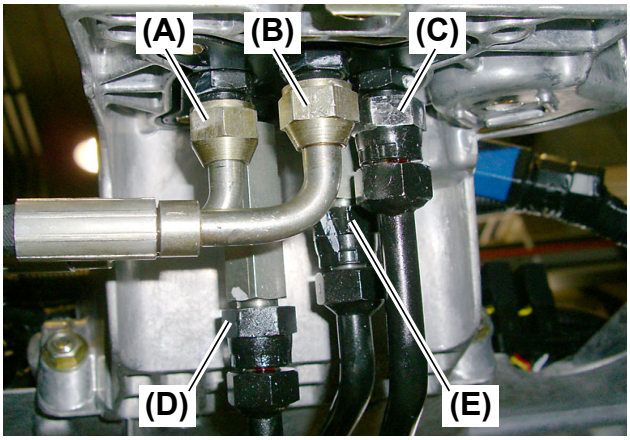

Fig. 2

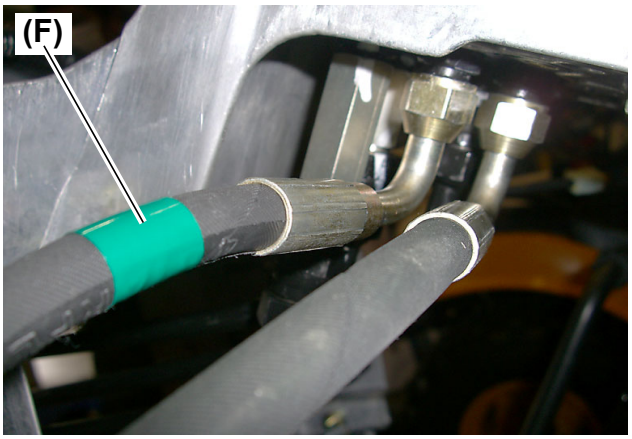

Fig. 3

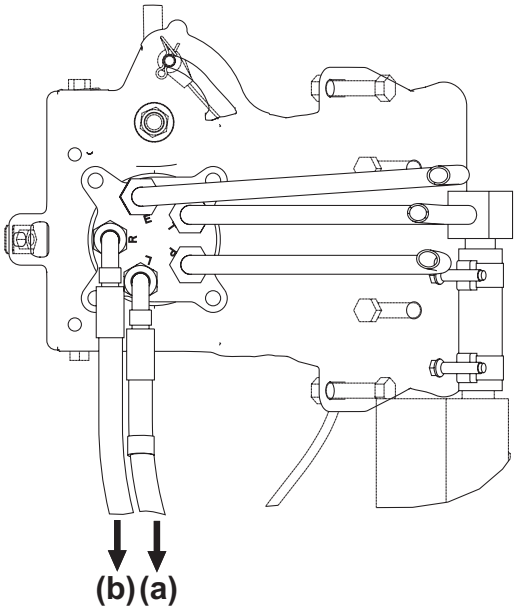

Fig. 4

(A) Power steering cylinder R
(B) Power steering cylinder L
(C) Control valve
(D) Charge pump on transmission
(E) Oil cooler
(F) Identification tape
(a) To Power steering cylinder L port
(b) To Power steering cylinder R port

1. Place an oil drain pan under the power steering valve.

2. Disconnect five (5) piping lines **(Fig. 2)** from the bottom of the power steering valve.

IMPORTANT

●Do not remove the identification tape **(Fig. 3, (F))** on the R hose of the power steering cylinder **(Fig. 2, (A))**.

NOTE:

●Always use two (2) spanners when disconnecting the hose. Failure to do so disconnects the fittings from the valve.

■ Power Steering Valve

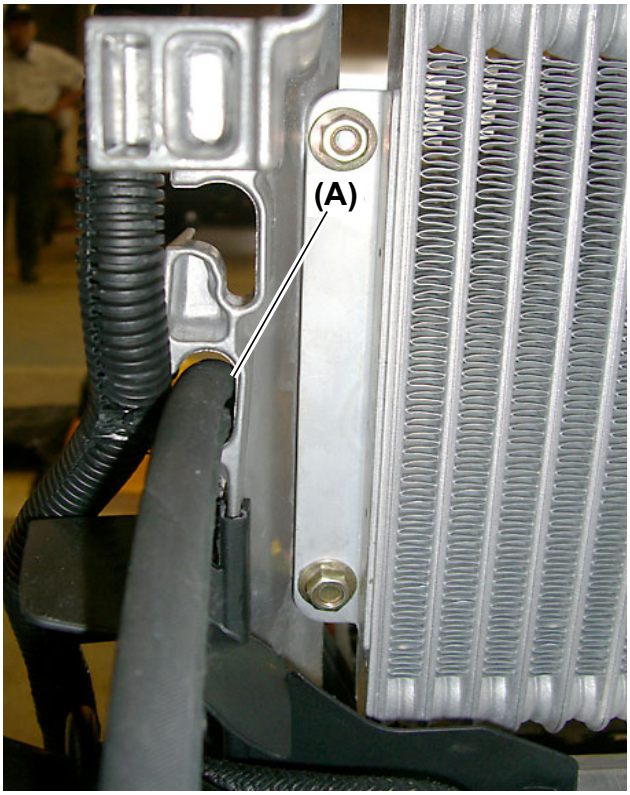

Fig. 5



Fig. 6

(A) Opening in the column bracket for power steering hoses
(B) Hoses

3. Disconnect the two (2) hoses **(Fig. 6, (B))**, which go to the power steering cylinder, from the opening **(Fig. 5, (A))** on the left side of the oil cooler.

■ Power Steering Valve

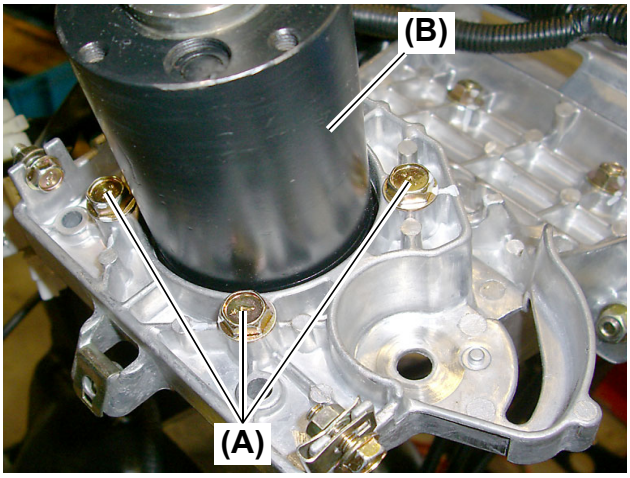

Fig. 7

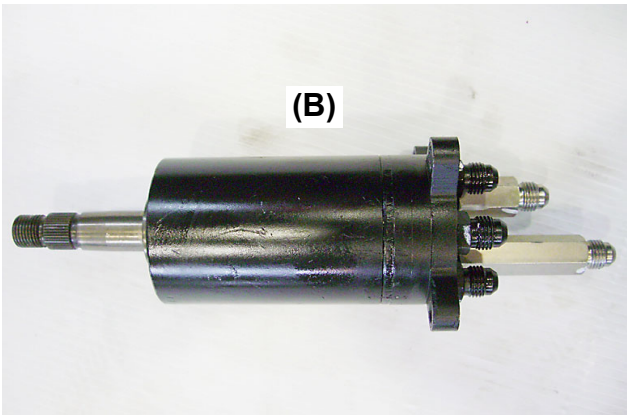

Fig. 8

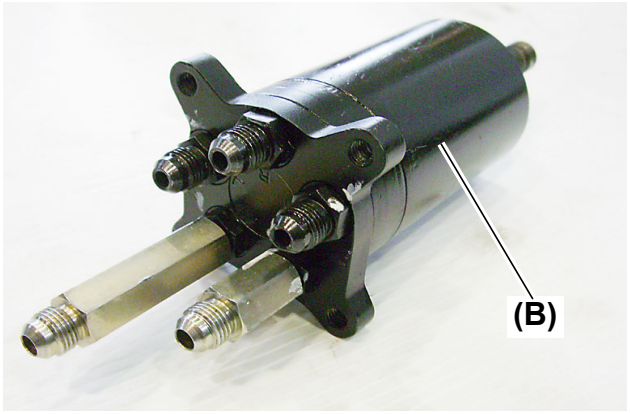

Fig. 9

(A) Bolt M8 × 30 mm (L: 1.2 in.)
(B) Power steering valve

4. Remove the power steering valve **(Fig. 7, 8, 9, (B))** by removing the four (4) M8 × 30 mm (L: 1.2 in.) bolts **(Fig. 7, (A))**.

IMPORTANT

- When the bolts are removed, the power steering valve **(Fig. 7, 8, 9, (B))** falls. To prevent it from falling, work while supporting it with a hand.

CAUTION

- **Do not disassemble the power steering valve (Fig. 7, 8, 9, (B)).**

NOTE:

- The power steering valve **(Fig. 7, 8, 9, (B))** cannot be removed unless the steering wheel is removed.

■ Power Steering Valve

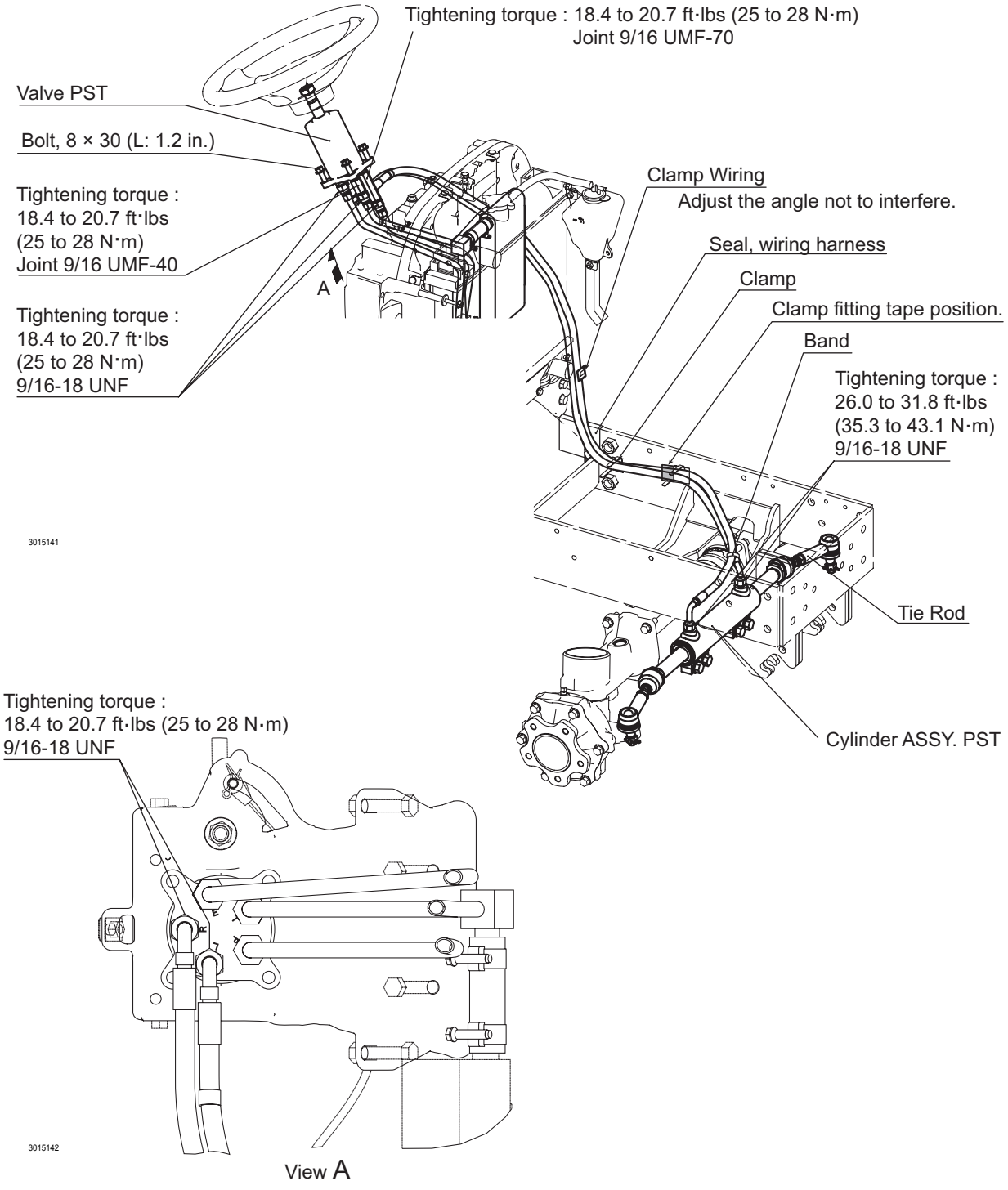

Fig. 10

5. Install the power steering valve in reference to the following figure and tighten with caution to its mounting position.

NOTE:

●When tightening, be careful so that the hoses do not interfere with the frame and F/A.

■ Power Steering Valve

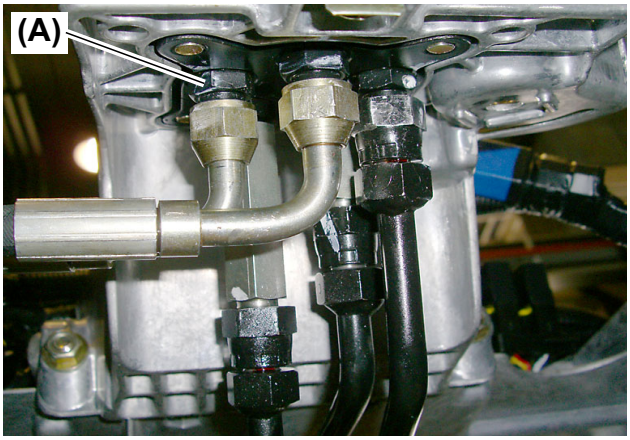

Fig. 11

(A) Fitting on the power steering valve side

⚠ CAUTION

- **When installing the piping, be careful not to loosen the fitting (Fig. 11, (A)) on the power steering valve side. After installing, make sure that the fitting has not been loosened.**

■ Power Steering Valve

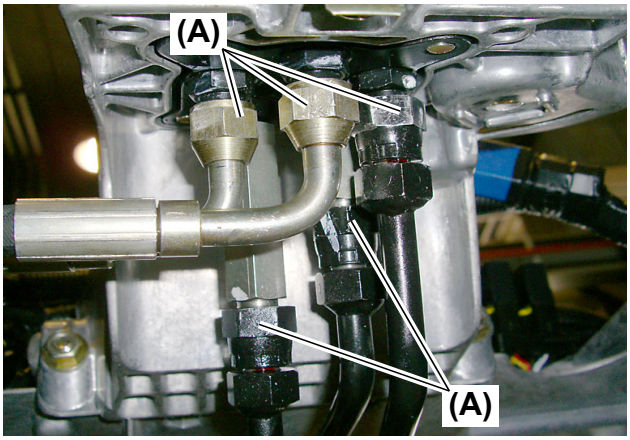

Fig. 12

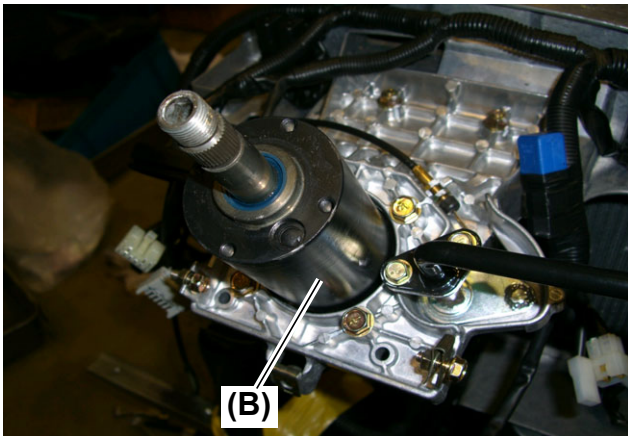

Fig. 13

(A) Hydraulic oil pipes
(B) Power Steering valve

1. Before removing the hydraulic oil pipes **(Fig. 12, (A))**, mark the oil pipes and the power steering valve port **(Fig. 13, (B))**.

2. Remove the hydraulic oil pipes **(Fig. 12, (A))**.

IMPORTANT

●Before removing the hydraulic oil pipes **(Fig. 12, (A))**, drain the hydraulic oil.

■ Power Steering Valve

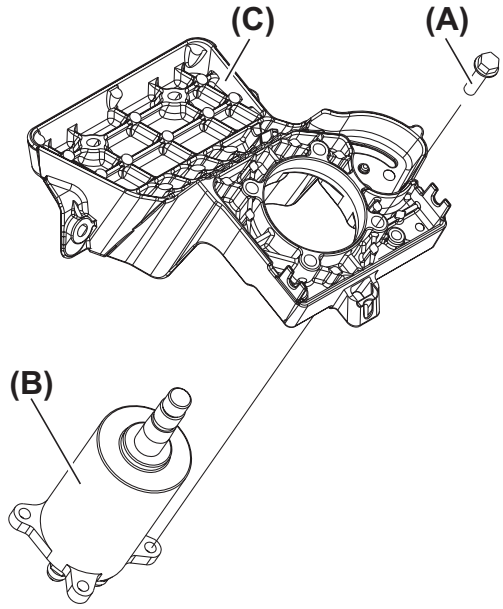

Fig. 14

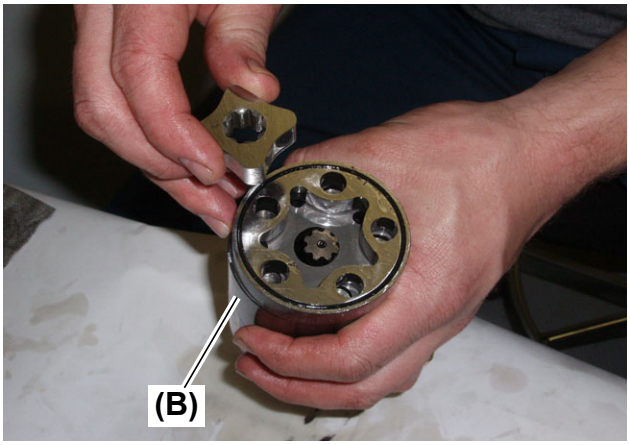

Fig. 15

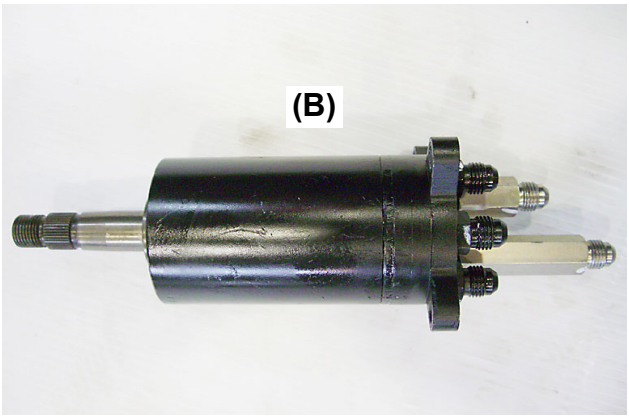

Fig. 16

(A) Bolt 8 × 30 (L: 11.81 in.)
(B) Steering bracket

3. Remove the 8 × 30 (L: 11.81 in.) bolts **(Fig. 14, (A))** and remove the power steering valve **(Fig. 14, 15, 16, (B))** from the steering bracket **(Fig. 14, (C))**.



Fig. 17

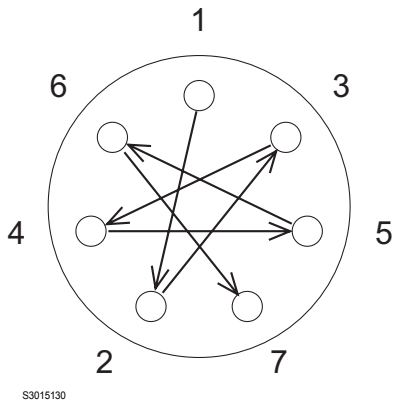

Fig. 18

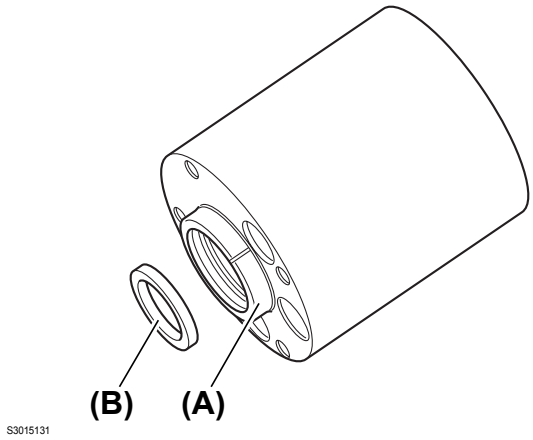

Fig. 19

(A) Collar
(B) Pressure blue rubber seal
(a) No. 1

4. The final tightening torque on screws shall be 17.7 ft•lbs (24 N•m) +/- 1.48 ft•lbs (2 N•m) and the process of tightening shall take place as shown in the attached: 1 - 2 - 3 - 4 - 5 - 6 - 7 **(Fig. 18)**.

Also it is recommended to do what we also do in production:
Perform an initial tightening at about 7.38 ft•lbs (10 N•m) then perform a second tightening at the final torque of 17.7 ft•lbs (24 N•m) +/- 1.48 ft•lbs (2 N•m), following the tightening pattern in **Fig. 18**.

5. Installation of the steering valve is the reverse order of removal. During installation, see page 10-192 for orientation of the valve into the steering bracket.

35. Steering Bracket

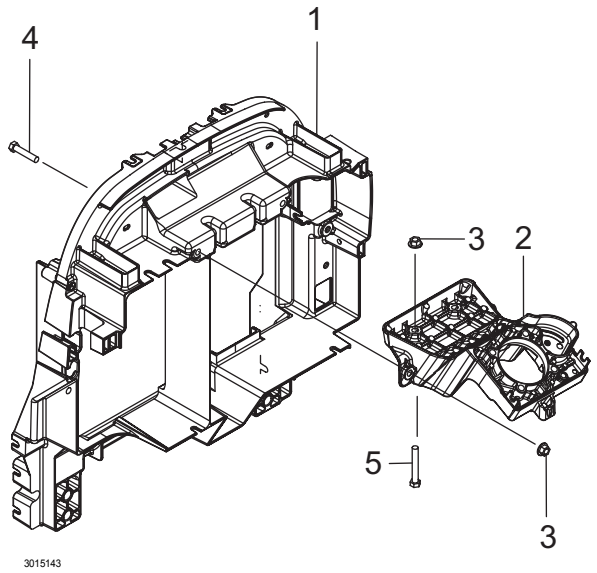

REF.	Description	Q'TY.
1	Bracket, Column	1
2	Bracket, Steering	1
3	Nut, M8	4
4	Bolt, 8 × 40 (L: 1.6 in.)	2
5	Bolt, 8 × 55 (L: 2.2 in.)	2

Fig. 1

■ Steering Bracket

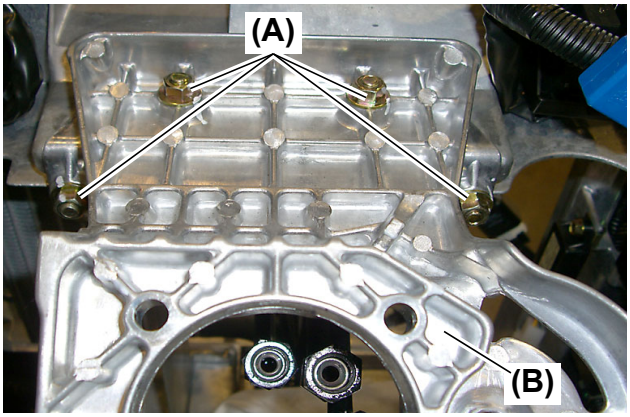

Fig. 2

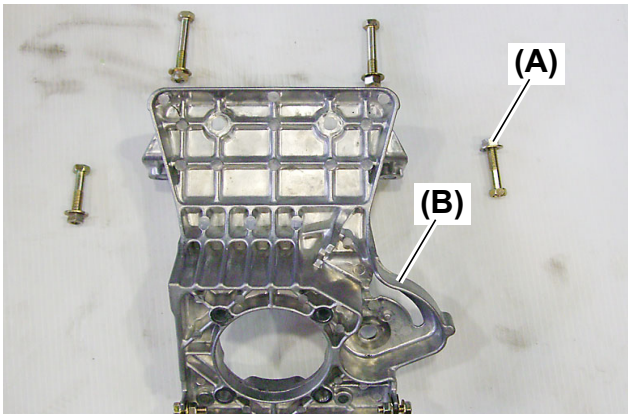

Fig. 3

(A) Nut M8
(B) Steering bracket

Remove the steering bracket **(Fig. 2, 3, (B))** by removing the four (4) M8 nuts **(Fig. 2, 3, (A))**.

NOTE:

●Tightening torque for installation: 17.0 to 21.4 ft•lbs (23 to 29 N•m)

36. Oil Cooler

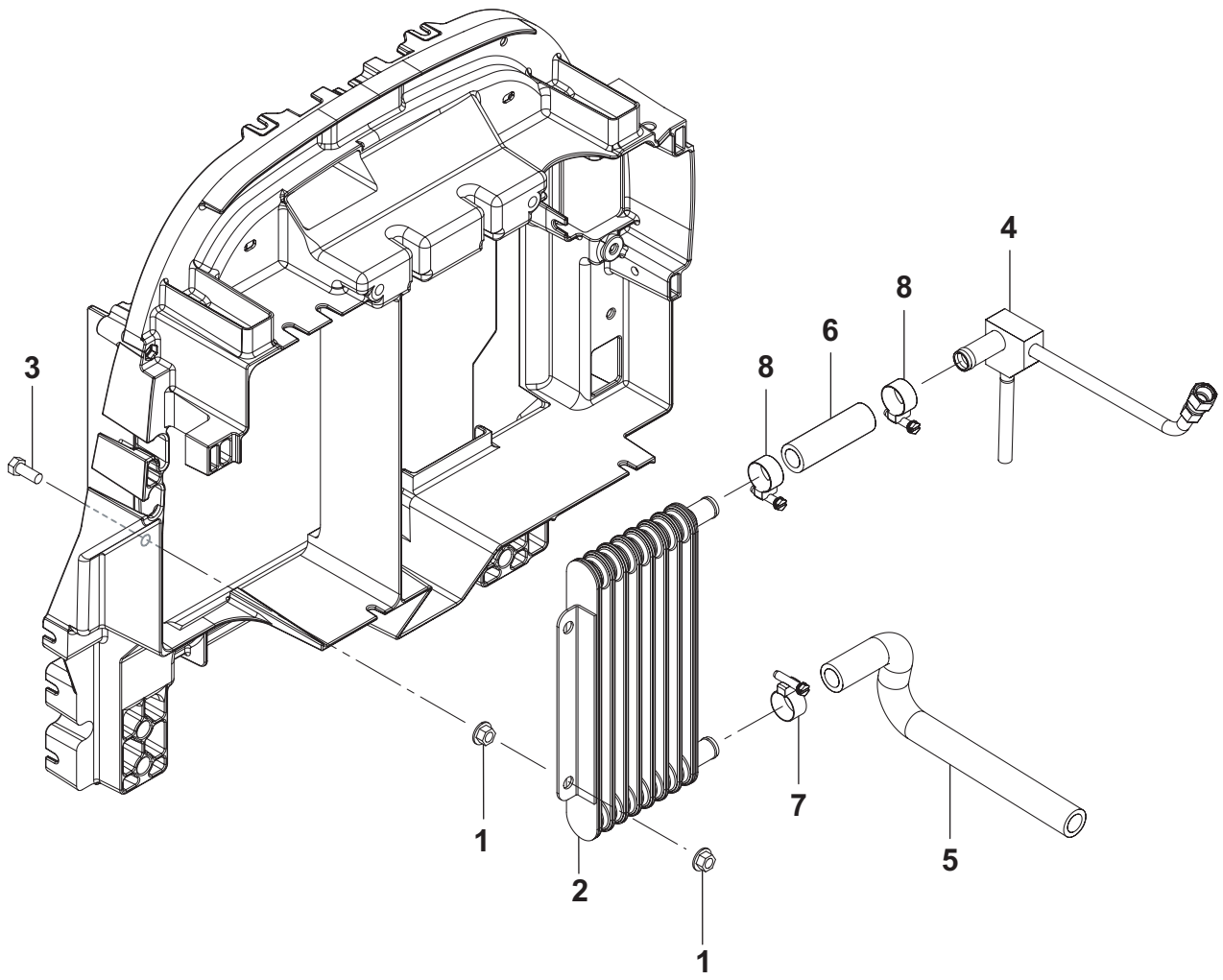

Fig. 1

REF.	Description	Q'TY.
1	Nut, M8	4
2	Cooler, Oil	1
3	Bolt M8 × 20 (L: 0.8 in.)	2
4	LP Pipe, Cooler CMP.	1
5	LP Hose A (Oil Cooler	1
6	LP Hose B (Oil Cooler	1
7	Clamp, Hose 22	2
8	Clamp, Hose 22	2

■ Oil Cooler

1. Place an oil drain pan under the oil cooler.

NOTE:

●Start with draining transmission oil.

■ Oil Cooler

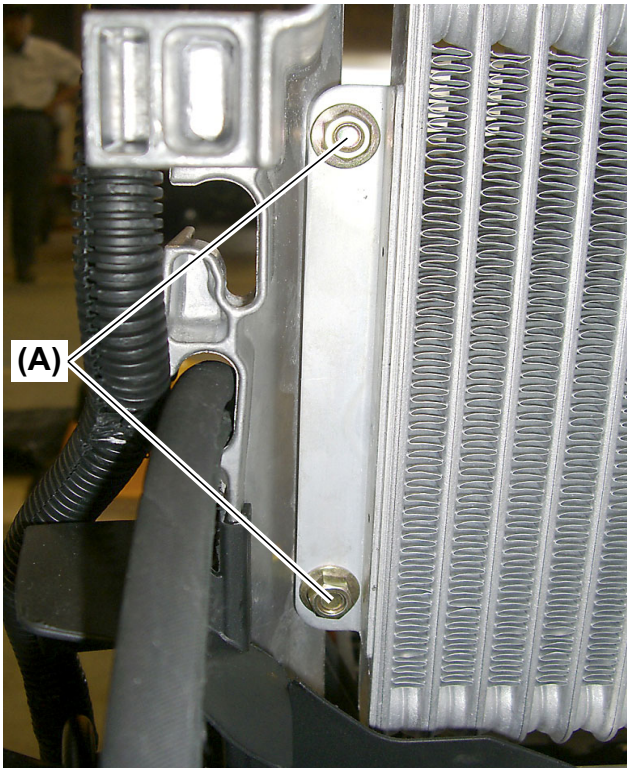

Fig. 2

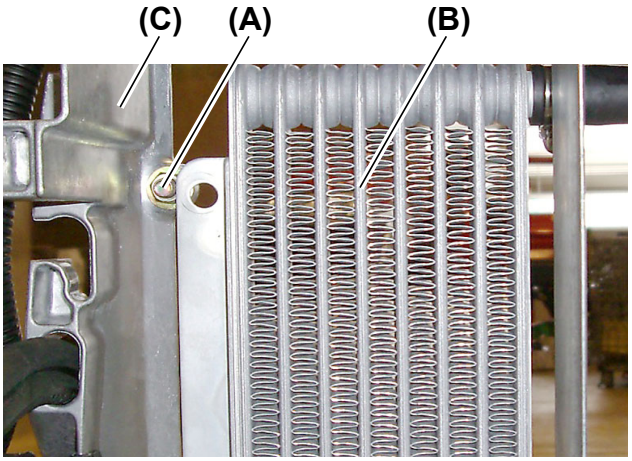

Fig. 3

(A) Nuts, M8
(B) Oil cooler
(C) Column bracket

2. Remove the M8 nuts **(Fig. 2, 3, (A))** that secure the oil cooler **(Fig. 3, (B))** to the column bracket **(Fig. 3, (C))**.

NOTE:

- The nuts **(Fig. 2, 3, (A))** are held from turning by hexagonal hole in the column bracket **(Fig. 3, (C))**.
- Removal of the M8 nuts **(Fig. 2, 3, (A))** is not required to remove the oil cooler **(Fig. 3, (B))**.

IMPORTANT

- Two (2) additional M8 nuts **(Fig. 2, (A))** have been installed on the oil cooler retaining bolts. Note that installing the oil cooler without installing the additional nuts causes interference between the retaining bolts and the radiator.

■ Oil Cooler

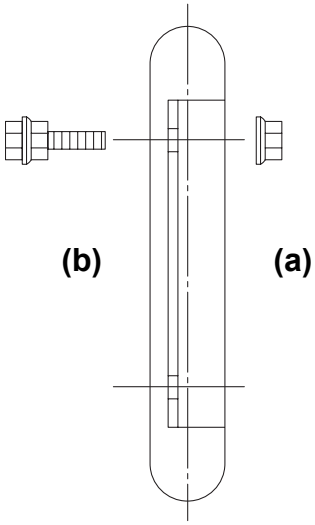

Fig. 4

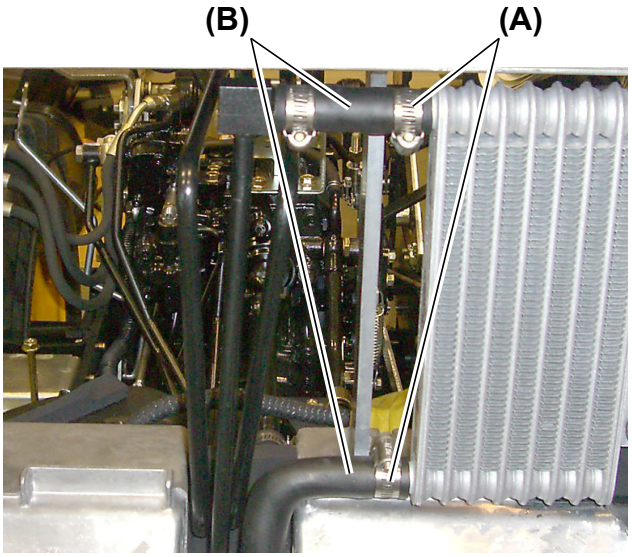

Fig. 5

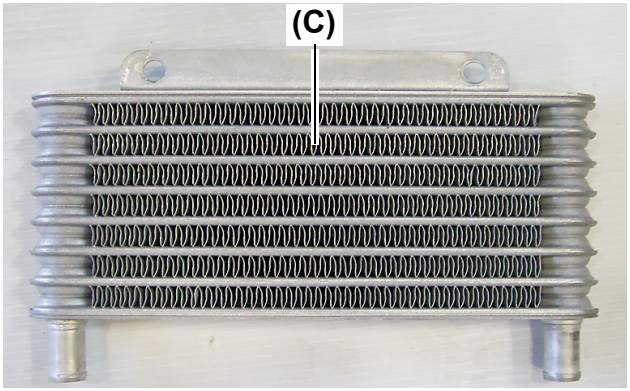

Fig. 6

(A) Hose clamp, 0.9 in. (22 mm) dia.
(B) Oil cooler hose
(C) Oil cooler
(a) Front
(b) Rear

3. When installing the oil cooler **(Fig. 6, (C))**, observe the following point:

NOTE:

●Tightening torque of the 0.9 in. (22 mm) dia. hose clamp: 1.8 to 2.5 ft•lbs (2.5 to 3.4 N•m)

4. Remove the hose clamps 0.9 in. (22 mm) dia. **(Fig. 5, (A))** on the upper and lower oil cooler hoses **(Fig. 5, (B))**.

5. Remove the oil cooler **(Fig. 6, (C))** from the column bracket.

⚠ WARNING

●Reverse installation of the oil cooler interferes with the radiator. Be careful of the installation direction of the oil cooler.

NOTE:

●Transmission oil in the oil cooler **(Fig. 6, (C))** flows out.

37. Hydraulic Pipes

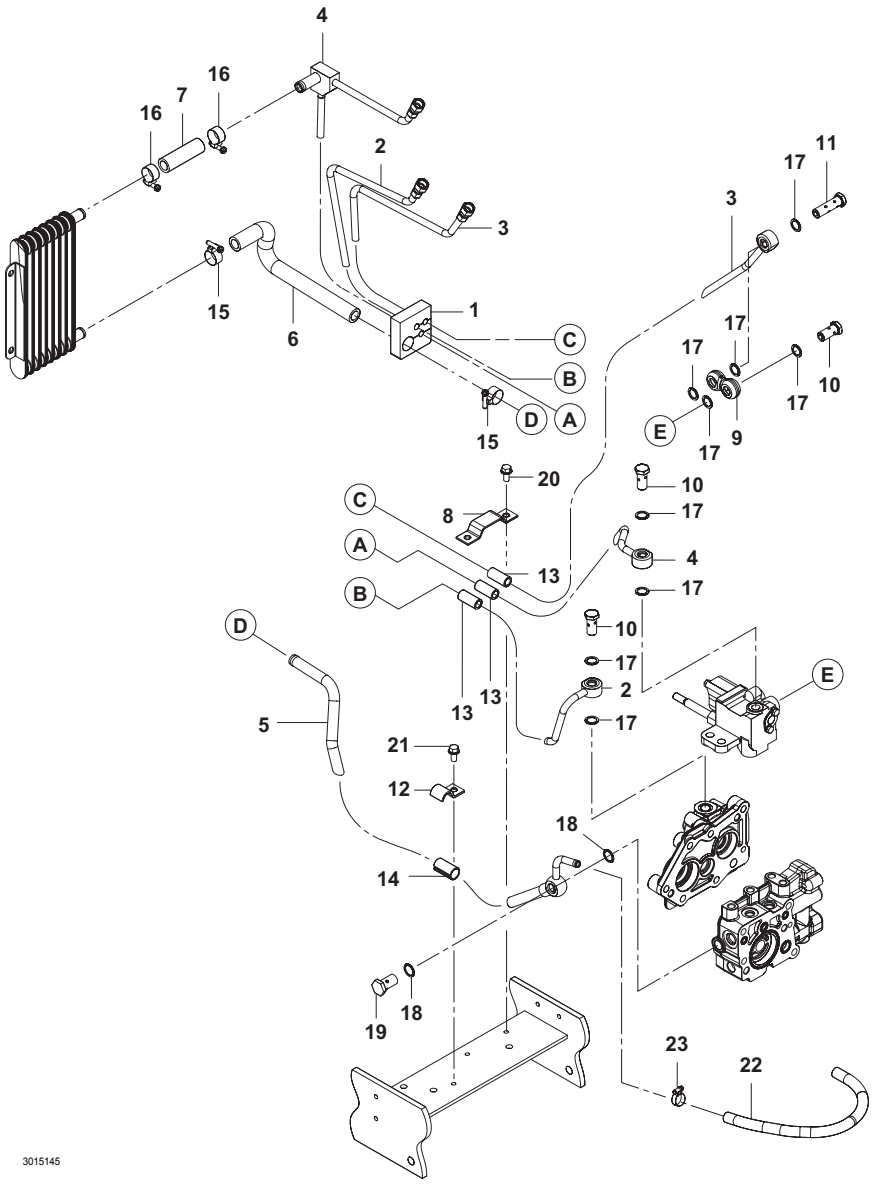

REF.	Description	Q'TY.
1	Seal, Pipe	1
2	Hp Pipe, Pump	1
3	HP Pipe, Valve	1
4	LP Pipe, Cooler	1
5	LP Pipe, Tank	1
6	LP Hose A (Oil Cooler	1
7	LP Hose B (Oil Cooler	1
8	Clamp, Pipe	1
9	Connector 9/16 UNF	1
10	Ball Joint Bolt 9/16	3
11	Ball Joint Bolt L 9/16	1
12	Clamp	1
13	Tube	3
14	Cushion	1
15	Clamp, Hose 22	2
16	Clamp, Hose 22	2
17	Gasket, 14 × 1.0	9
18	Gasket, 16 × 1.0	2
19	Bolt, Joint 10	1
20	Bolt, 8 × 16 (L: 0.64 in.)	2
21	Bolt, 8 × 16 (L: 0.64 in.)	1
22	LP Hose, Drain	1
23	Clamp, Hose 19	2

Fig. 1

■ Hydraulic Pipes

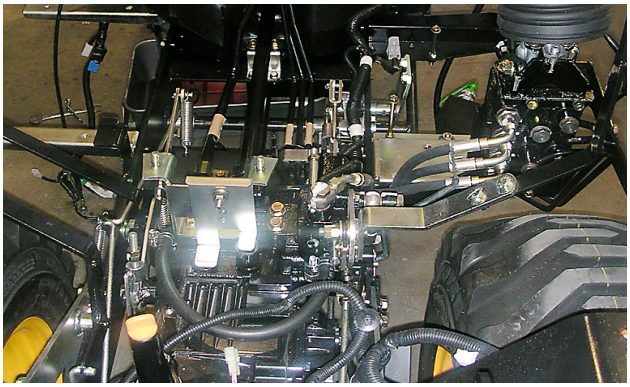

Fig. 2

1. Place a large drain pan under the transmission. The transmission holds approximately 2 US gal (7.5 L).

2. Remove the drain plug. Allow transmission to drain. Replace drain plug after transmission is completely drained.

* Fig. 2 shows a full view taken from the rear of the transmission before repair.

■ Hydraulic Pipes

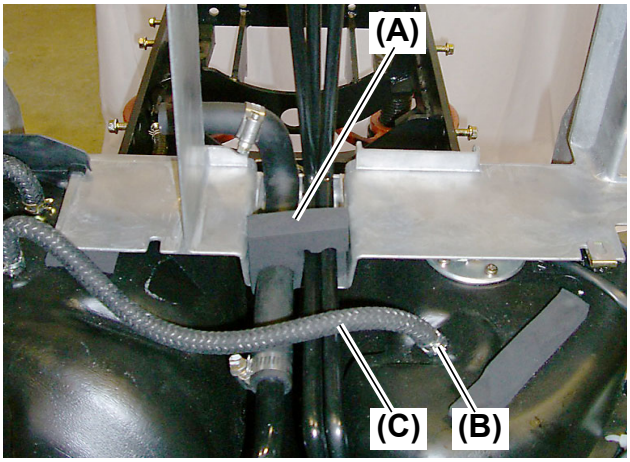

Fig. 3

(A) Seal, pipe
(B) Hose clip dia. 12
(C) Fuel hose

3. Remove the pipe seal **(Fig. 3, (A))**.

4. Remove the hose clip **(Fig. 3, (B))** on the fuel hose **(Fig. 3, (C))**.

■ Hydraulic Pipes

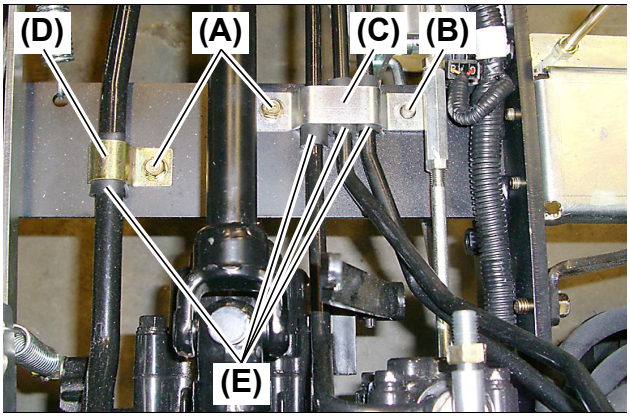

Fig. 4

(A) Bolt M8 × 16 mm (L: 0.64 in.)
(B) Pin
(C) Pipe clamp
(D) Pipe clamp
(E) Rubber cushion

5. Remove the two (2) M8 × 16 mm (L: 0.64 in.) bolts **(Fig. 4, (A))** that secures the pipe clamps **(Fig. 4, (C))** to the main frame. The three (3) hydraulic pipes are protected by a rubber cushion **(Fig. 4, (E))** (Tube).

6. Remove the M8 × 16 mm (L: 0.64 in.) bolt **(Fig. 4, (A))** that secures the pipe clamp **(Fig. 4, (D))** to the main frame. The hydraulic pipes are protected by a rubber cushion **(Fig. 4, (E))** (Tubes).

NOTE:

●A positioning pin **(Fig. 4, (B))** is provided.

■ Hydraulic Pipes

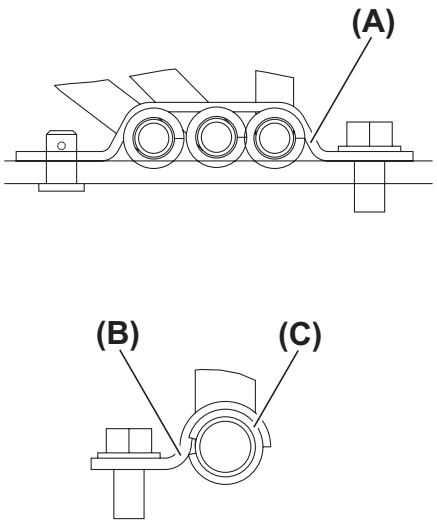

Fig. 5

(A) Pipe clamp
(B) Pipe clamp
(C) Rubber cushion

7. The illustration **(Fig. 5)** shows the hydraulic pipes, clamps **(Fig. 5, (A), (B))**, and rubber cushion assembly **(Fig. 5, (C))**.

■ Hydraulic Pipes

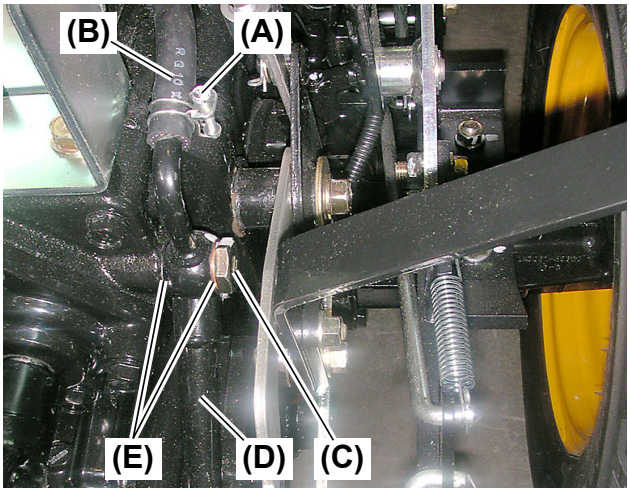

Fig. 6



Fig. 7

(A) Hose clamp dia. 18
(B) Hose
(C) Ball joint bolt fittings
(D) Low pressure pipe
(E) Copper seal

8. Remove the hose clamp **(Fig. 6, (A))** from hose connected to the front of the low pressure pipe **(Fig. 6, (D))**. (Remove the ball joint bolt from the low pressure pipe **(Fig. 6, (D))** to the power pump. Thread the ball joint bolt back into the power pump with the sealing washer.)

9. Remove the low pressure pipe **(Fig. 6, (D))** and set off to the side.

10. Remove the low pressure hose and set off to the side.

IMPORTANT

●When installing, replace the two (2) copper seals on the ball joint bolt with new ones.

NOTE:

●Tightening torque of the hose clamp: 1.1 to 1.8 ft•lbs (1.5 to 2.5 N•m)
●Tightening torque of the pipe fittings

■ Hydraulic Pipes

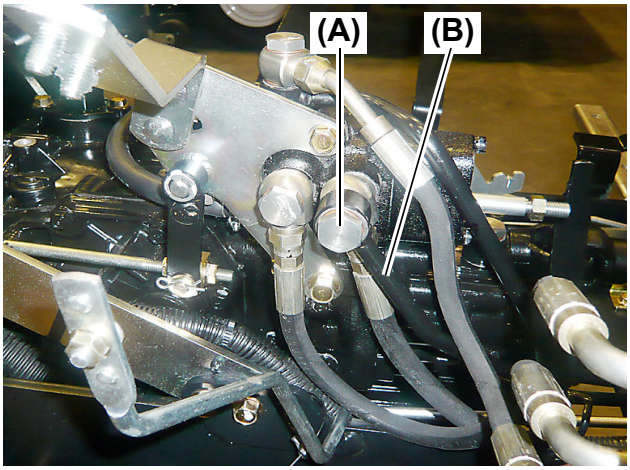

Fig. 8

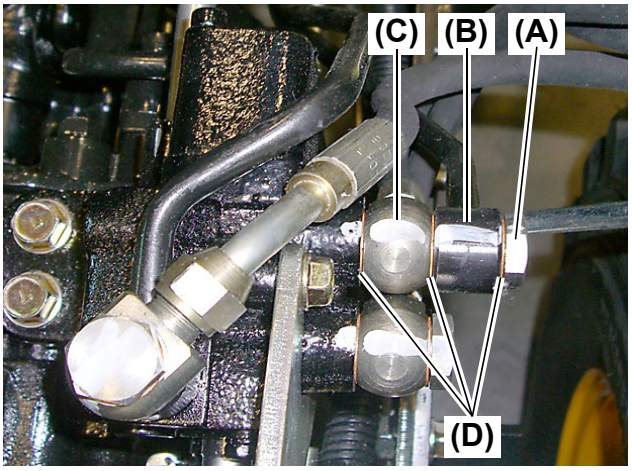

Fig. 9

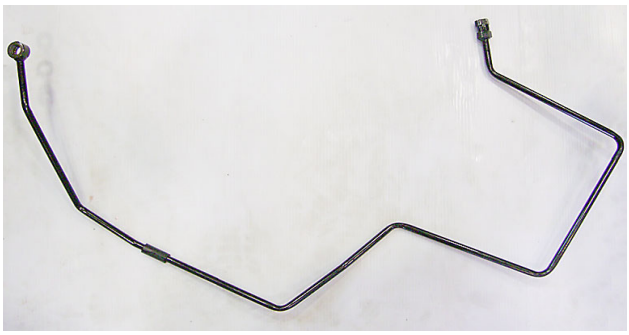

Fig. 10

(A) Ball joint bolt
(B) High pressure pipe connected to the power steering valve
(C) Hydraulic hose of the implement control valve
(D) Copper seal

11. Remove the ball joint bolt securing the power steering high pressure pipe **(Fig. 8, (B))** to the power pump.

12. Install the ball joint bolt back into the high pressure pipe **(Fig. 8, (B))**.

13. Remove the power steering high pressure pipe from the steering valve assembly **(Fig. 8, (B))**.

14. Remove the power steering high pressure pipe from the unit and set off to the side.

NOTE:

- Tightening torque of the hose clamp: 36.1 to 43.5 ft•lbs (49 to 59 N•m)
- For the implement control valve version, the pipe has been tightened together with the hydraulic hose of the implement control valve **(Fig. 9, (C))**.

⚠ CAUTION

- **When installing, replace the three (3) copper seals (Fig. 9, (D)) with new ones.**

■ Hydraulic Pipes

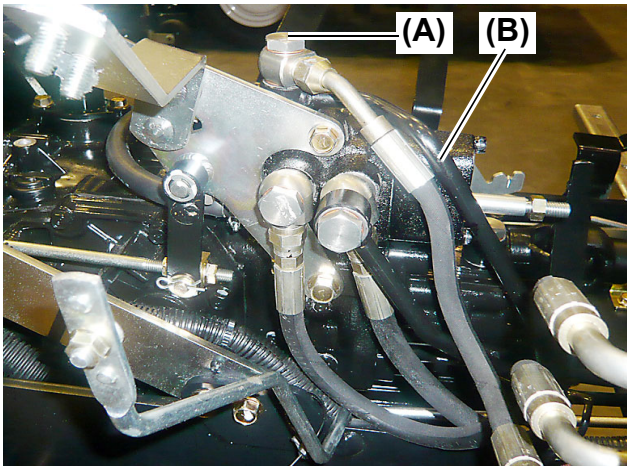

Fig. 11

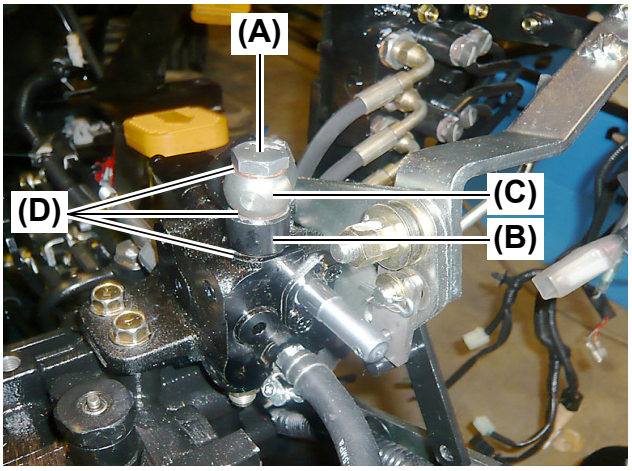

Fig. 12



Fig. 13

(A) Ball joint bolt fittings
(B) Oil cooler low pressure pipe
(C) Hydraulic hose of the implement control valve
(D) Copper seal

15.Remove the ball joint bolt that secures the oil cooler to the low pressure pipe **(Fig. 11, 12, (B))**.

NOTE:

- Tightening torque of the hose clamp: 28.8 to 36.1 ft•lbs (39 to 49 N•m)
- For the implement control valve version, the pipe has been tightened together with the hydraulic hose of the implement control valve **(Fig.12, (C))**.

IMPORTANT

- When installing, replace the three (3) copper seals **(Fig.12, (D))** with new ones.

■ Hydraulic Pipes

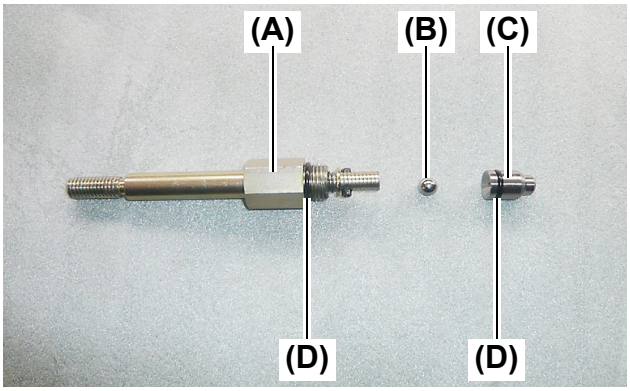

Fig. 14

(A) Shaft guide
(B) Steel ball
(C) Plunger
(D) O-ring

16.Remove the shaft guide **(Fig. 14, (A))** of the hydraulic flow control / stop valve.

NOTE:

●Tightening torque for installation: 17.7 to 36.6 ft•lbs (24 to 36 N•m)

IMPORTANT

●In order not to lose the steel ball plunger, take it out of the valve and keep it.
●When installing, replace the O-ring with a new one.

■ Hydraulic Pipes

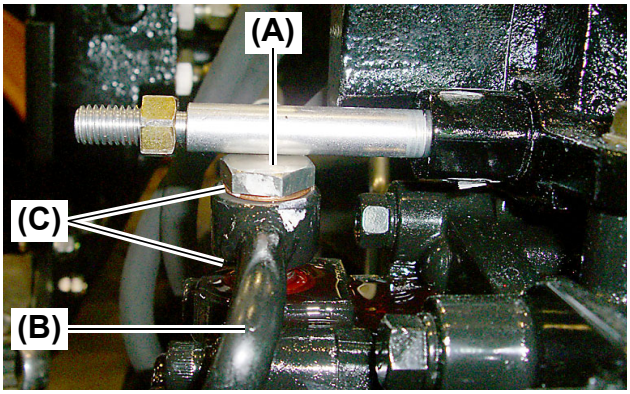

Fig. 15

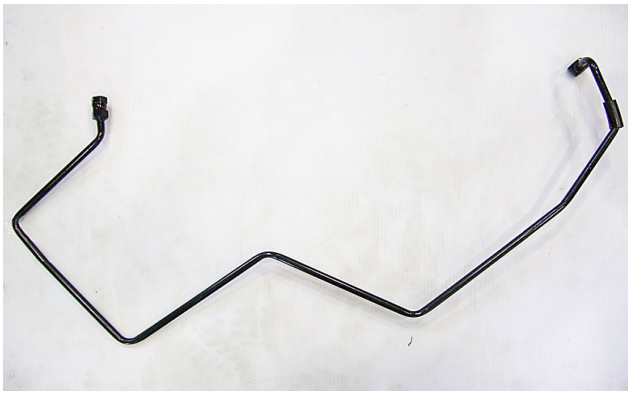

Fig. 16

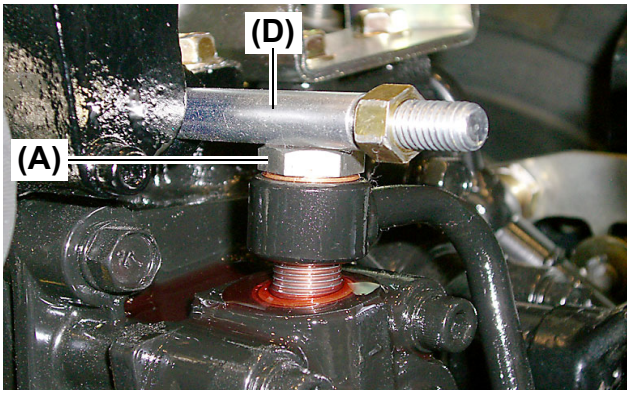

Fig. 17

(A) Ball joint bolt
(B) Gear pump high pressure pipe
(C) Copper seal
(D) Hydraulic flow control / stop valve shaft

17.Remove the ball joint bolt **(Fig. 15, 17, (A))** and then the gear pump high pressure pipe **(Fig. 15, (B))**.

IMPORTANT

●When installing, replace the two (2) copper seals **(Fig. 15, (C))** with new ones.

NOTE:

●The presence of the hydraulic flow control / stop valve shaft **(Fig. 17, (D))** does not allow the ball joint bolt **(Fig. 15, 17, (A))** to be removed because it contacts with them. Forced removal in this state causes oil leakage. To remove this fitting, first remove the shaft guide. (See page 10-211 for this procedure.)

■ Hydraulic Pipes

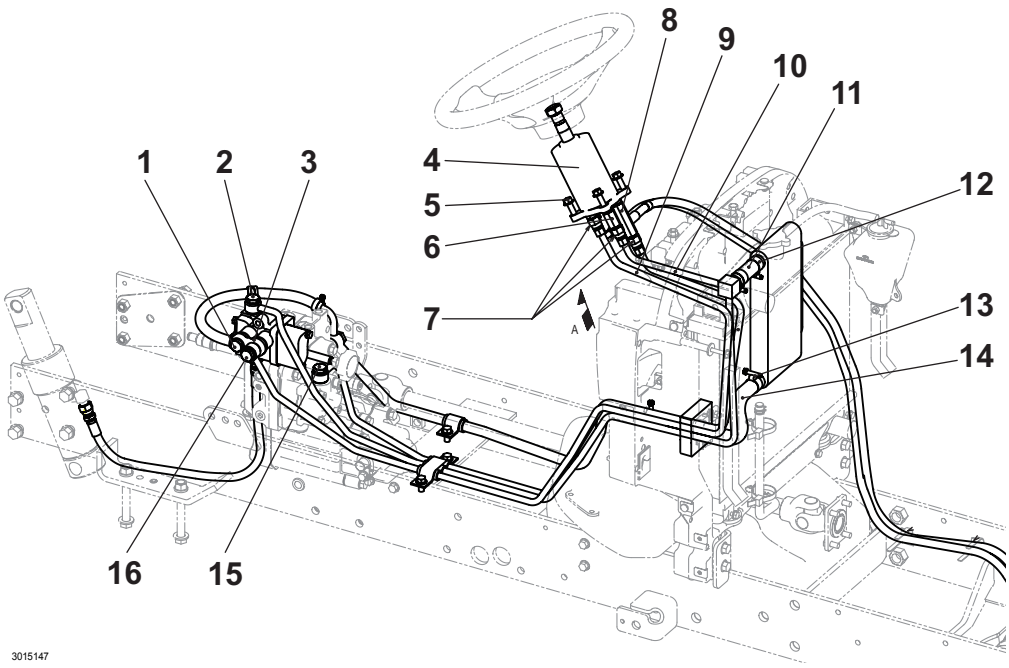

Fig. 18

REF.	Description	Q'TY
1	Ball Joint Bolt 9/16 UNF Tightening Torque: 28.8 to 36.1 ft•lbs (39 to 49 N•m)	
2	Ball Joint Bolt 9/16 UNF Tightening Torque: 28.8 to 36.1 ft•lbs (39 to 49 N•m)	
3	Connector 9/16 UNF	
4	Valve, PST	
5	Bolt, 8 × 30 (L: 1.2 in.) Tightening Torque: 17.0 to 21.4 ft•lbs (23 to 29 N•m)	
6	Joint 9/16 UNF-40 Tightening Torque: 18.4 to 20.6 ft•lbs (25 to 28 N•m)	
7	9/16-18 UNF Tightening Torque: 18.4 to 20.6 ft•lbs (25 to 28 N•m)	
8	Joint 9/16 UNF-70 Tightening Torque: 18.4 to 20.6 ft•lbs (25 to 28 N•m)	
9	HP Pipe, Valve	
10	LP Pipe, Oil Cooler	
11	LP Hose B, Oil Cooler	
12	Clamp, Hose 22 Tightening Torque: 1.8 to 2.5 ft•lbs (2.5 to 3.4 N•m)	
13	Clamp, Hose 22 Tightening Torque: 1.8 to 2.5 ft•lbs (2.5 to 3.4 N•m)	
14	LP Hose A, Oil Cooler	
15	Ball Joint Bolt 9/16 UNF Tightening Torque: 28.8 to 36.1 ft•lbs (39 to 49 N•m)	
16	Ball Joint Bolt L 9/16 UNF Tightening Torque: 36.1 to 43.5 ft•lbs (49 to 59 N•m)	

■ Hydraulic Pipes

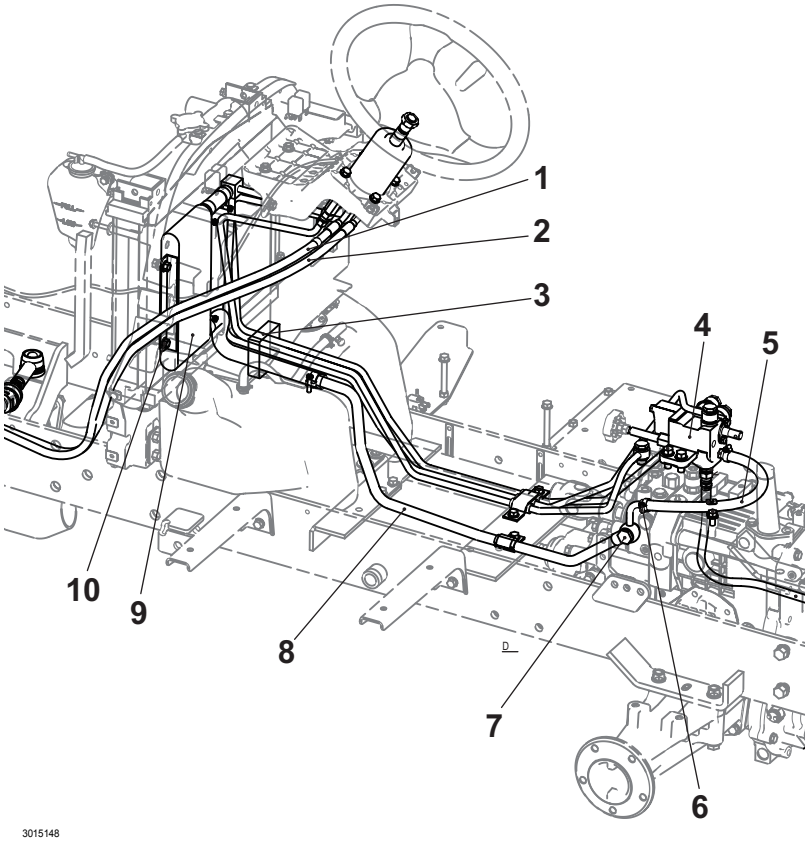

Fig. 19

REF.	Description	Q'TY
1	HP Hose, Cylinder R	
2	HP Hose, Cylinder L	
3	Seal, Pipe	
4	Valve ASSY, Lift	
5	LP Hose, Drain	
6	Clamp, Hose 18 Tightening Torque: 1.1 to 1.8 ft•lbs (1.5 to 2.5 N•m)	
7	Ball Joint Bolt 10 Tightening Torque: 36.1 to 43.5 ft•lbs (49 to 59 N•m)	
8	LP Pipe, Tank	
9	Cooler, Oil	
10	Nut, Washer 8	

38. Main Drive Shaft

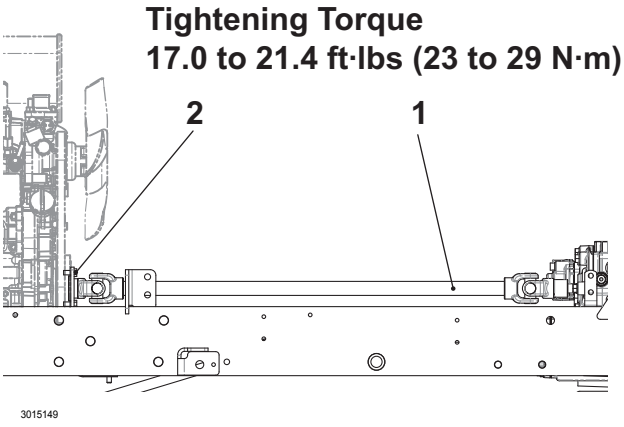

Fig. 1

REF.	Description	Q'TY.
1	Bolt M8 × 16 mm (L: 0.64 in.)	4
2	Main Drive Shaft	1

NOTE:

- The main drive shaft is neither elongated nor contracted (telescopic). Therefore, it cannot be removed unless the engine or the transmission is separated from the tractor body.
- Description in this section is based on the assumption that the engine and the front parts have been removed.

■ Main Drive Shaft

1. Remove the three (3) piping lines connected from the bottom of the power steering valve to the transmission (See page 10-188 "34. Power Steering Valve").

■ Main Drive Shaft

2. Remove the two (2) piping lines from the oil cooler (See page 10-199 "36. Oil Cooler").

■ Main Drive Shaft

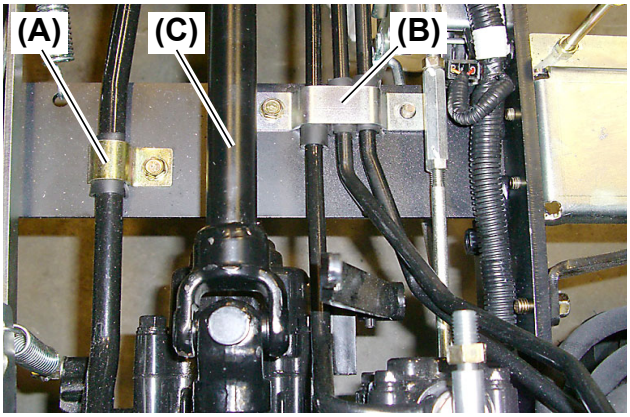

Fig. 2

(A) Pipe clamp
(B) Pipe clamp
(C) Main drive shaft

3. Remove the two (2) pipe clamps **(Fig. 2, (A), (B))** (See page 5-36 (5)).

4. Pull out the main drive shaft forward **(Fig. 2, (C))**.

■ Main Drive Shaft

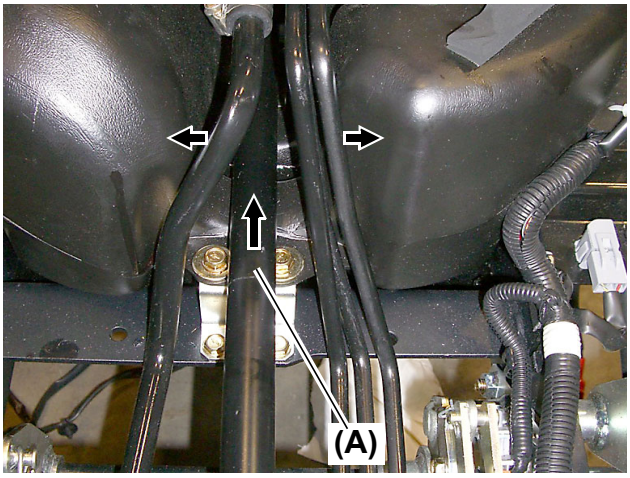

Fig. 3

(A) Main drive shaft

5. Expand the piping over the fuel tank slightly sideways so that the main drive shaft **(Fig. 3, (A))** can pass through.

⚠ CAUTION

●Do not expand beyond necessity. Failure to do so causes oil leakage and/or damage to the piping.

■ Main Drive Shaft

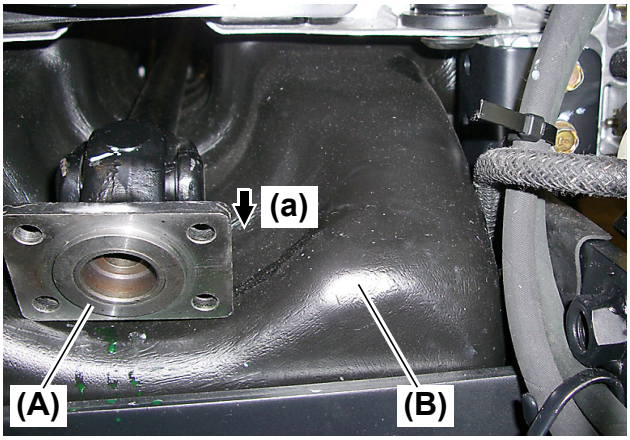

Fig. 4

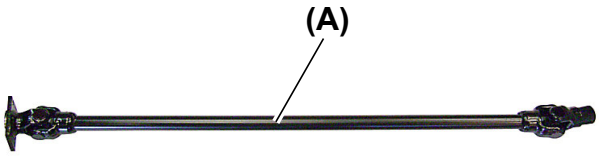

Fig. 5

(A) Main drive shaft
(B) Fuel tank
(a) Forward

6. Engine Has to be removed to remove drive shaft **(Fig. 4, 5, (A))**.

7. Slide drive shaft **(Fig. 4, 5, (A))** off of transmission shaft, and pull all the way out between the fuel tank **(Fig. 4, (B))** and column bracket.

8. Installation of drive shaft is the reverse order of removal. Apply a film of grease on the splines of the transmission input shaft.

NOTE:

- The tightening torque of the shaft to engine flywheel bolts is 17 to 21.4 ft•lbs (23 to 29 N•m).
- The hydraulic piping ball joint bolt torque is 36.1 to 43.5 ft•lbs (49 to 59 N•m).

39. Column Bracket

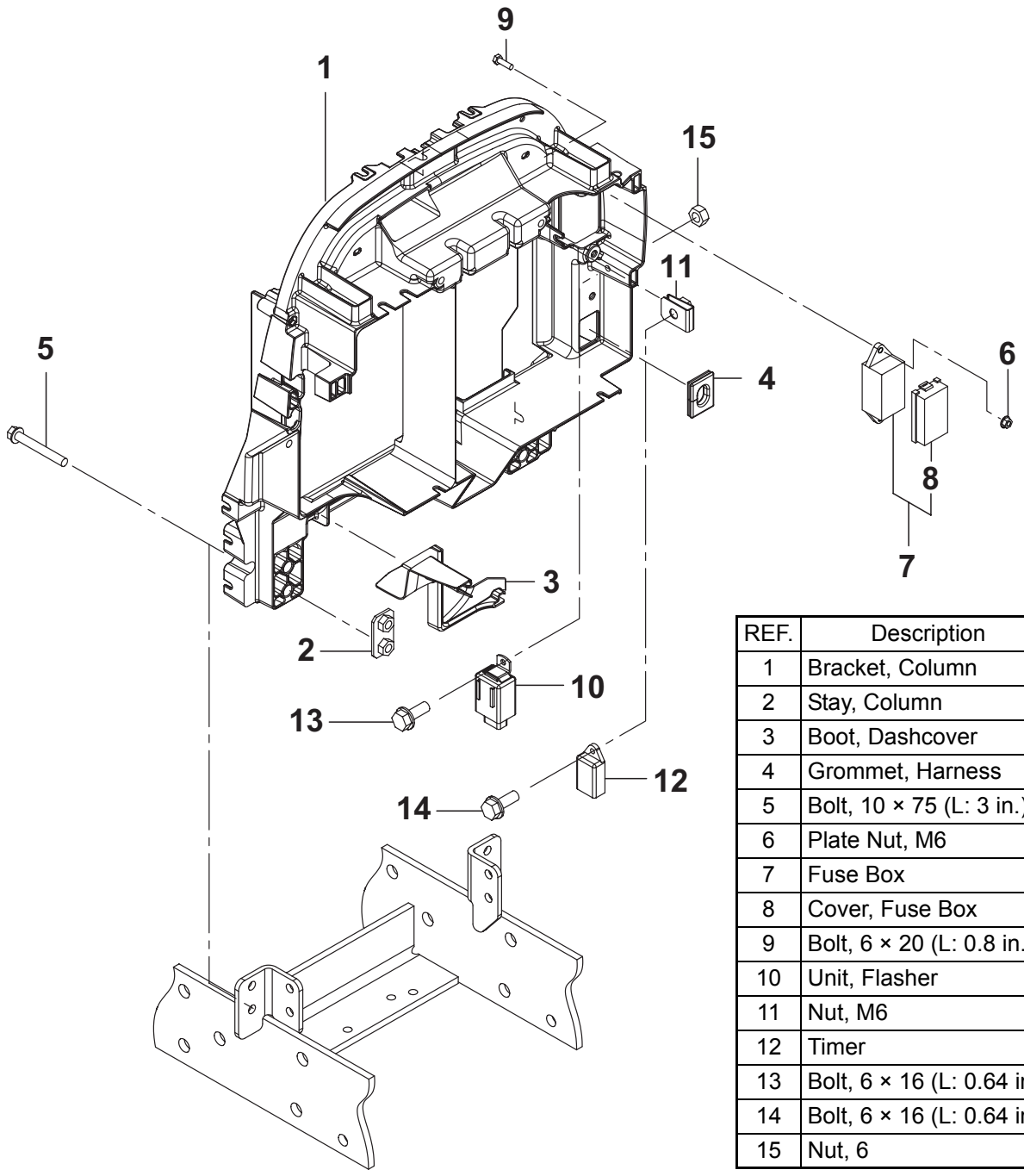

REF.	Description	Q'TY.
1	Bracket, Column	1
2	Stay, Column	2
3	Boot, Dashcover	1
4	Grommet, Harness	1
5	Bolt, 10 × 75 (L: 3 in.)	4
6	Plate Nut, M6	2
7	Fuse Box	1
8	Cover, Fuse Box	1
9	Bolt, 6 × 20 (L: 0.8 in.)	2
10	Unit, Flasher	1
11	Nut, M6	1
12	Timer	1
13	Bolt, 6 × 16 (L: 0.64 in.)	1
14	Bolt, 6 × 16 (L: 0.64 in.)	1
15	Nut, 6	1

Fig. 1

■ Column Bracket

Details as follow

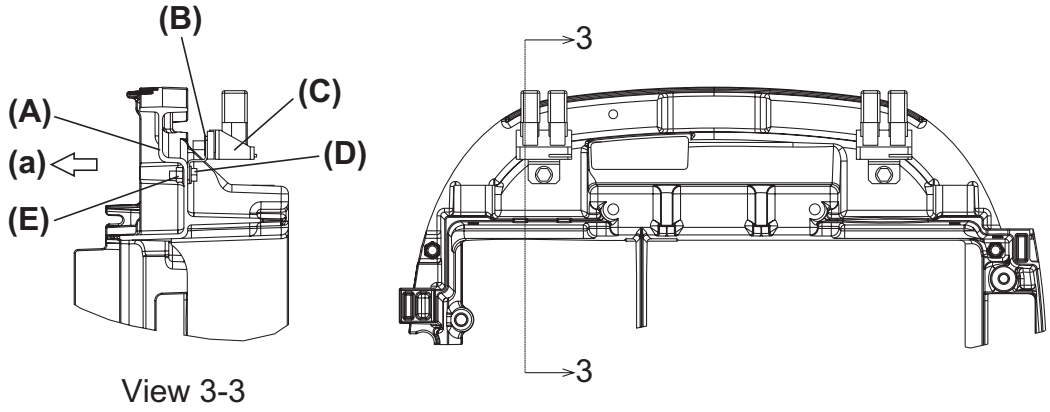

Fig. 2

(A) Column bracket
(B) Relay stay
(C) ISO Relay block
(D) Bolt, 6 × 16 (L: 0.64 in.)
(E) Nut, 6
(a) Engine side

■ Column Bracket

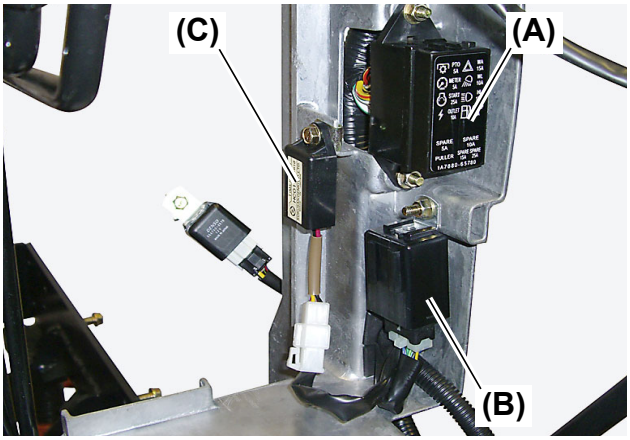

Fig. 3

(A) Fuse box
(B) Relay
(C) Glow plug timer

1. Remove the fuse box **(Fig. 3, (A))**, relay **(Fig. 3, (B))** and glow plug timer **(Fig. 3, (C))** from the column bracket.

■ Column Bracket

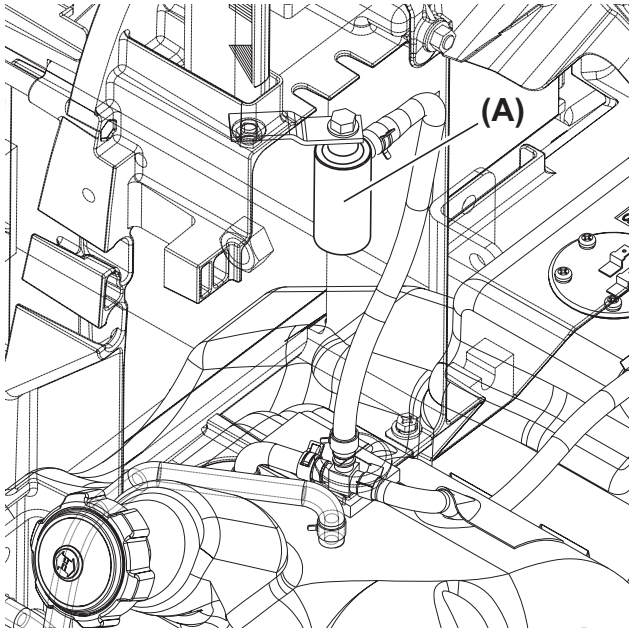

Fig. 4

(A) Fuel tank breather

2. Remove the fuel tank breather **(Fig. 4, (A))** from the column bracket.

■ Column Bracket

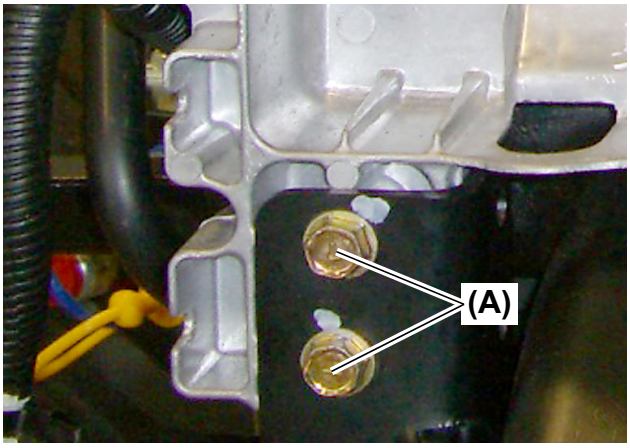

Fig. 5

(A) Bolt M10 × 75 mm (L: 3 in.)

3. Remove the four (4) M10 × 75 mm (L: 3 in.) bolts **(Fig. 5, (A))** that secure the column bracket to the main frame.

NOTE:

●Tightening torque of the M10 × 75 mm (L: 3 in.) bolts is: 32.5 to 43.5 ft•lbs (44 to 59 N•m)

■ Column Bracket

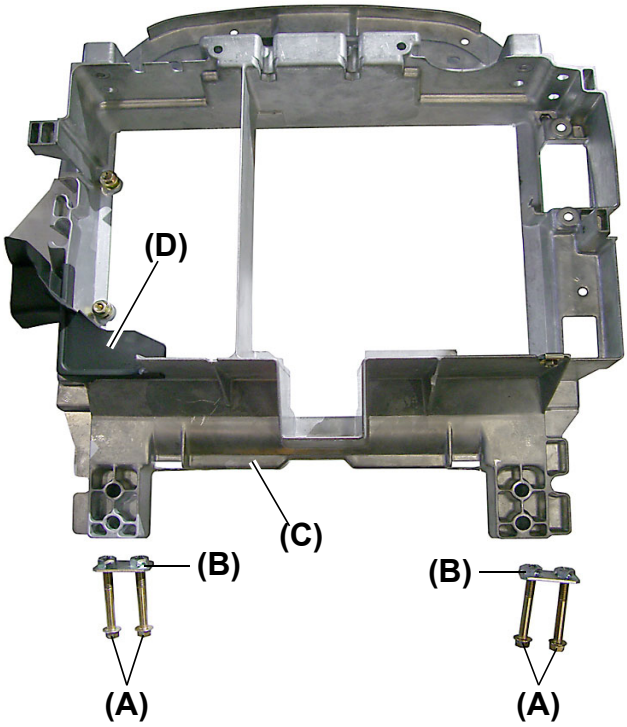

Fig. 6

(A) Bolt M10 × 75 mm (L: 3 in.)
(B) Nut plate
(C) Column bracket
(D) Column boot

4. The Column bracket **(Fig. 6, (C))** is retained to the main frame by four (4) M10 × 75 mm (L: 3 in.) bolts **(Fig. 6, (A))** and two (2) nut plates **(Fig. 6, (B))**.

NOTE:

- When reinstalling torque the M10 × 75 mm (L: 3 in.) bolts to 32.5 to 43.5 ft•lbs (44 to 59 N•m).
- The column boot **(Fig. 6, (D))** has been bonded.

40. Fuel Tank

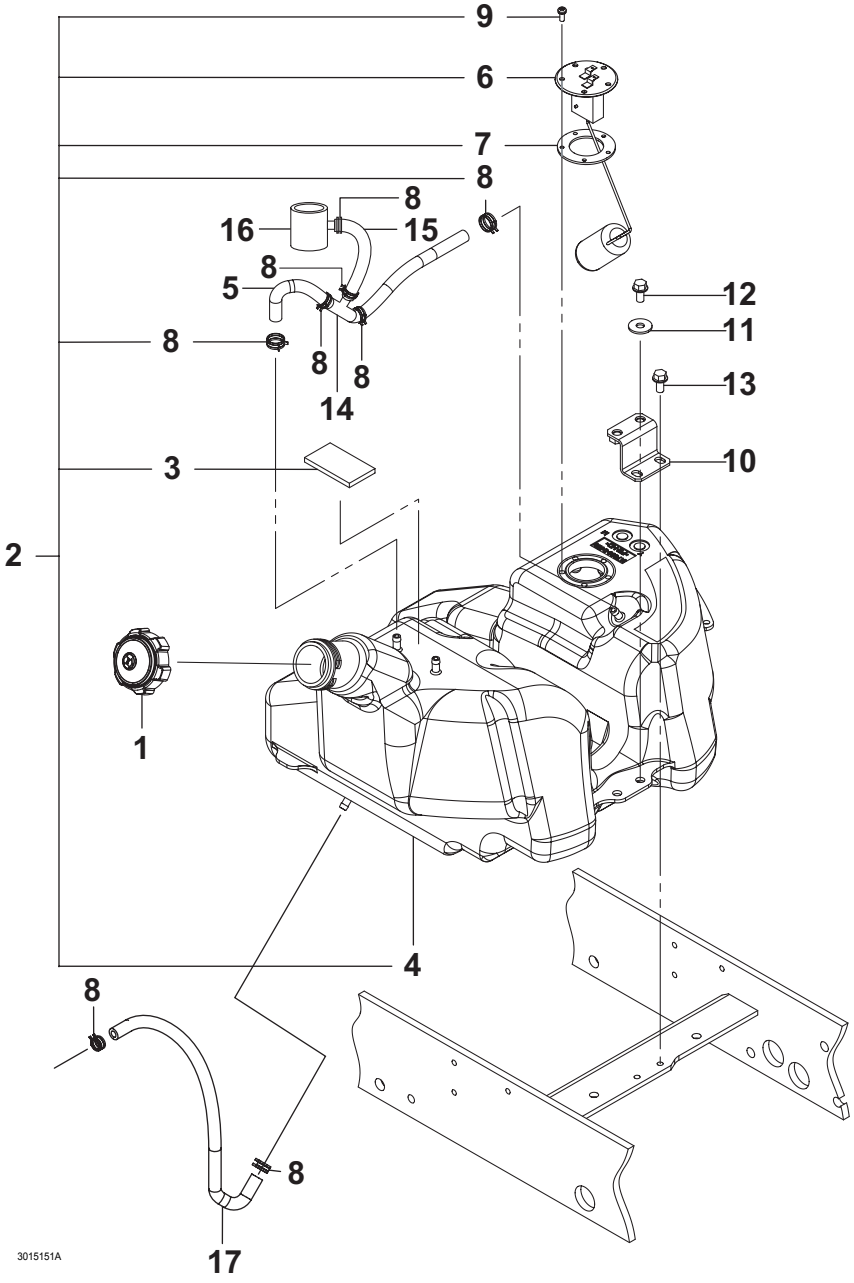

Fig. 1

REF.	Description	Q'TY.
1	Cap, Fuel Tank	1
2	Tank ASSY., Fuel	1
3	Cushion, Fuel Tank	1
4	Tank, Fuel	1
5	Hose, Return	1
6	Sensor ASSY., Fuel	1
7	Gasket, Fuel Gauge	1
8	Clamp, Hose 12	2
9	Screw, 5 × 12	5

REF.	Description	Q'TY.
10	Stay, Fuel Tank	1
11	Washer, 8	2
12	Bolt, 8 × 16 (L: 0.64 in.)	2
13	Bolt, 8 × 16 (L: 0.64 in.)	2
14	Hose Joint T	1
15	Air Vent Hose	1
16	Air Vent	1
17	Hose	1

■ Fuel Tank

NOTE:

●Be careful not to damage the fuel tank when handling it.

⚠WARNING

Avoid injury:

- **Remember that vapor from diesel fuel is explosive and flammable.**
- **NEVER smoke while handling the fuel.**
- **Keep the fuel away from open flames or sparks.**
- **Before servicing, stop the engine.**
- **Before servicing, allow the engine to cool off.**
- **Work in a well-ventilated area.**
- **Immediately wipe away spilled fuel.**

1. Place an oil drain pan for receiving oil under the fuel tank.

■ Fuel Tank

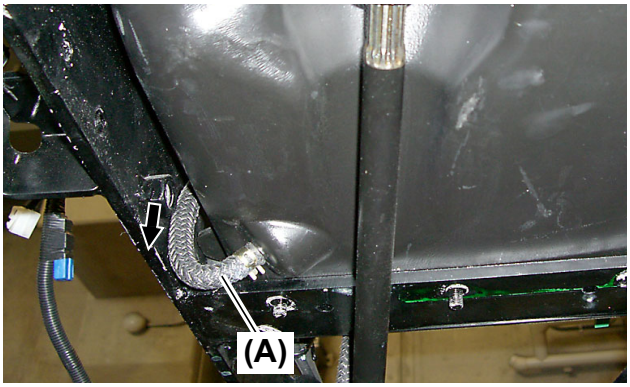

Fig. 2

(A) Hose

2. Remove the lower cover under the tank. See page 10-88 for removal of fuel tank lower cover.

3. Pull out the hose **(Fig. 2, (A))** connected to the fuel tank bottom downward. Remove the pin plugging the fuel line and drain the fuel (See page 10-176, "32. Fuel Filter and Fuel Feed Pump").

■ Fuel Tank

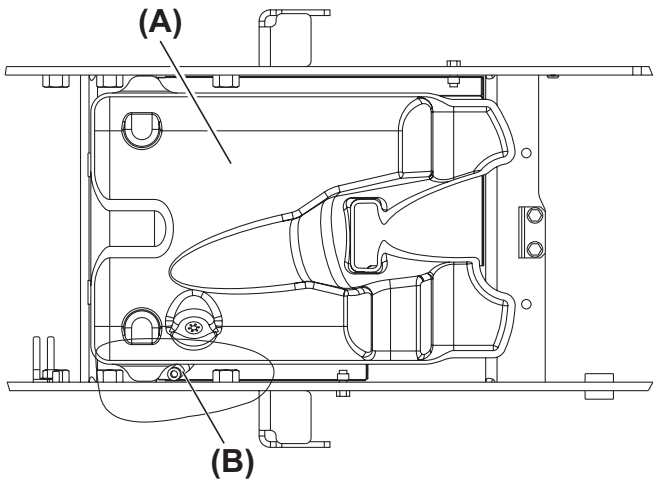

View 1-1

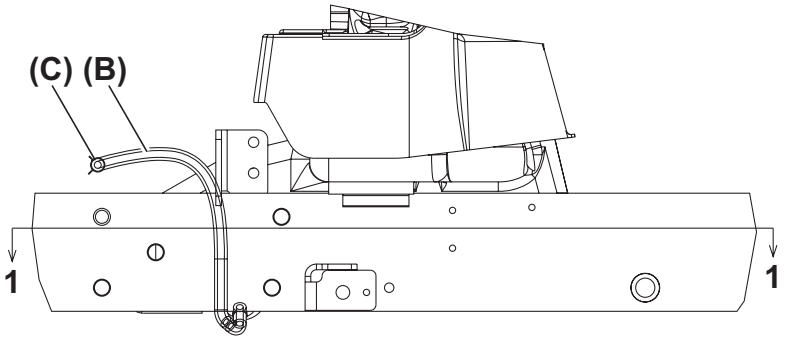

Fig. 3

(A) Fuel tank
(B) Hose
(C) Hose clamp

IMPORTANT

●Pay attention to the routing position of the hose **(Fig. 3, (B))** at the time of installation.

■ Fuel Tank

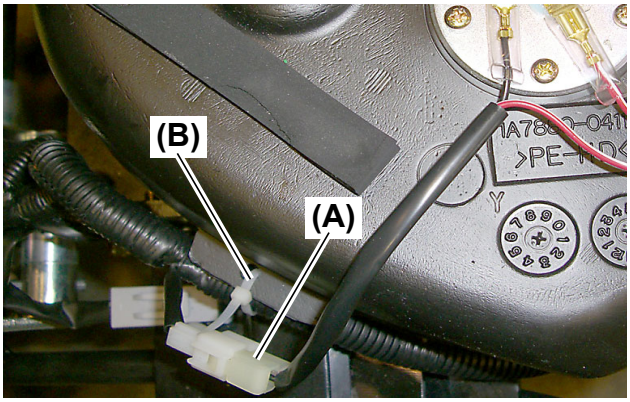

Fig. 4

(A) Fuel sensor connector
(B) Harness band

4. Disconnect the fuel sensor connector **(Fig. 4, (A))** and cut the harness band **(Fig. 4, (B))**.

■ Fuel Tank

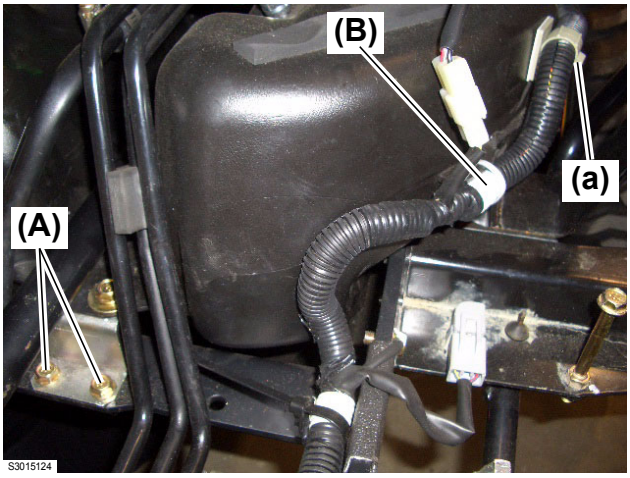

Fig. 5

(A) Bolts, M8 × 16 mm (L: 0.6 in.)
(B) Harness band
(a) The harness has been clamped with wire sticker.

5. Remove the two (2) M8 × 16 mm (L: 0.6 in.) bolts **(Fig. 5, (A))** and cut the harness band **(Fig. 5, (B))**.

■ Fuel Tank

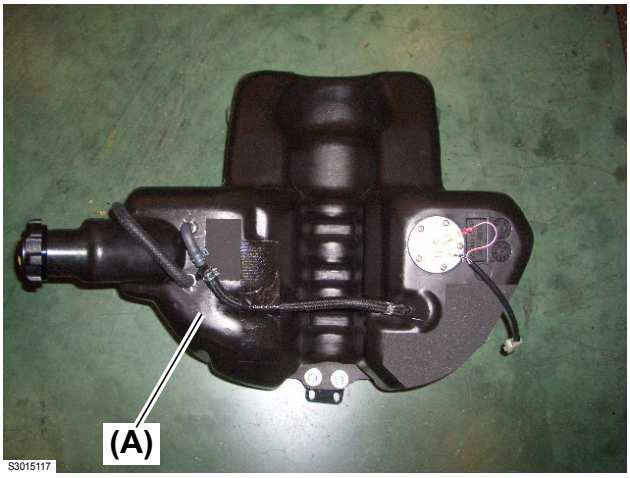

Fig. 6

(A) Fuel tank

6. Remove the fuel tank **(Fig. 6, (A))**.

■ Fuel Tank



Fig. 7

7. When installing the fuel tank, observe the following points:
   - Insert the fuel hose all the way to install it.
   - Paste the cushion, which has been stripped from the fuel tank, on its original position on the tank.

⚠ DANGER

- **If the cushion mentioned above has been worn or damaged, replace with a new one. Failure to do so causes fuel leakage.**

8. Installation of the fuel tank is the reverse order of removal.

41. Fuel Sensor

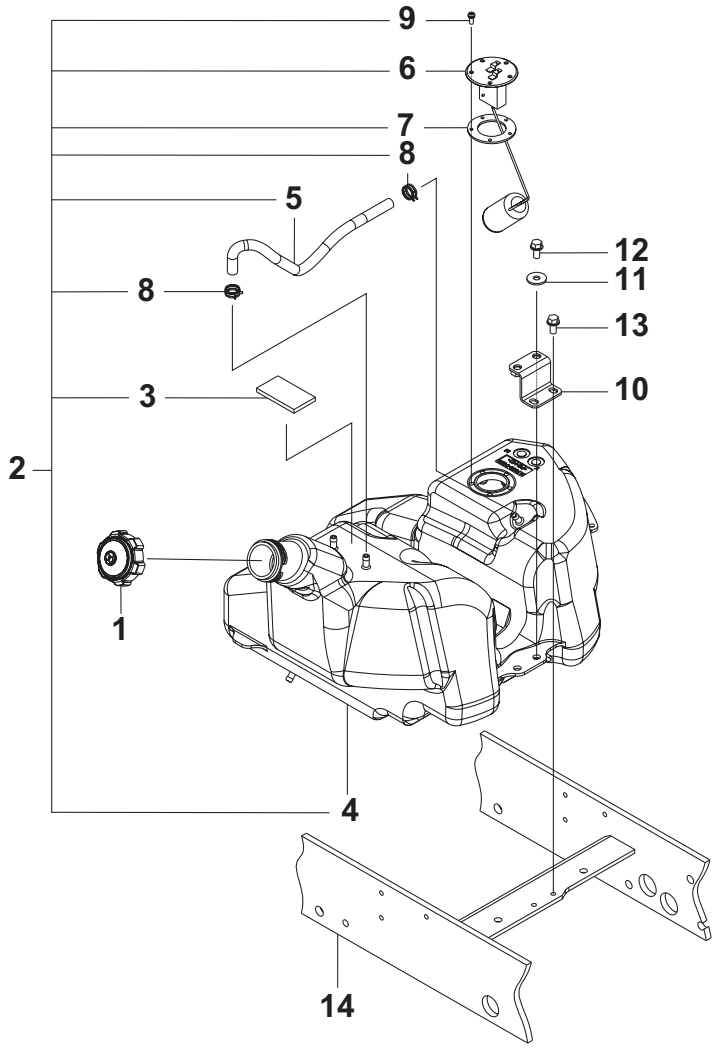

Fig. 1

REF.	Description	Q'TY.
1	Cap, Fuel Tank	1
2	Tank ASSY, Fuel	1
3	Cushion, Fuel Tank	1
4	Tank, Fuel	1
5	Hose	1
6	Sender ASSY, Fuel	1
7	Gasket, Fuel Gauge	1

REF.	Description	Q'TY.
8	Clamp, Hose 12	2
9	Screw, 5 × 12 (L: 0.48 in.)	5
10	Stay, Fuel Tank	1
11	Washer, 8	2
12	Bolt, 8 × 16 (L: 0.64 in.)	2
13	Bolt, 8 × 16 (L: 0.64 in.)	2
14	SCT Frame M ASSY.	1

■ Fuel Sensor

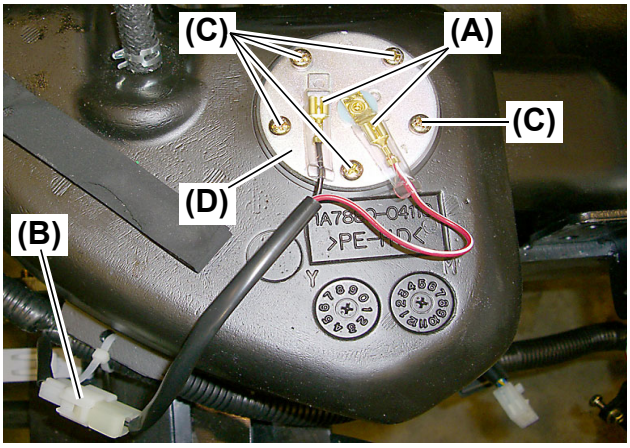

Fig. 2

(A) Fuel sensor connector
(B) Fuel sensor connector
(C) Screws, M5 × 12 mm (L: 0.48 in.)
(D) Fuel sensor

1. Disconnect the fuel sensor connectors **(Fig. 2, (A), (B))**.

2. Mark the fuel sensor and tank with a location mark (white paint etc.) for proper location upon reassembly.

3. Remove the five (5) M5 × 12 mm (L: 0.48 in.) screws **(Fig. 2, (C))** and then slowly take the fuel sensor **(Fig. 2, (D))** out of the fuel tank.

■ Fuel Sensor

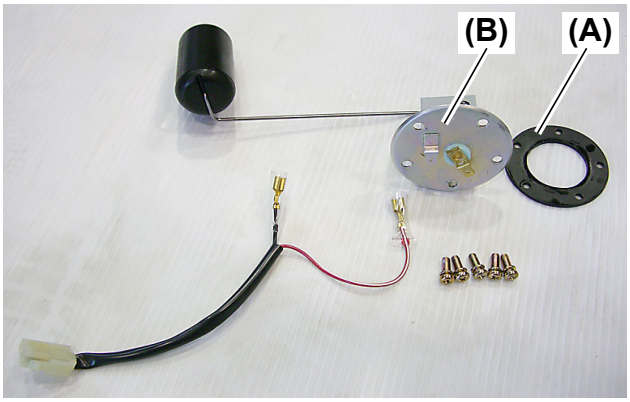

Fig. 3

(A) Gasket
(B) Fuel sensor

4. When installing, observe the following points:

⚠ WARNING

- **Replace the gasket (Fig. 3, (A)) with a new one.**
- **Install the fuel sensor (Fig. 3, (B)) in reference to the Fig. 3, being careful of the installation direction of the fuel sensor (Fig. 3, (B)).**

42. Power Take Off (PTO) Safety Cover

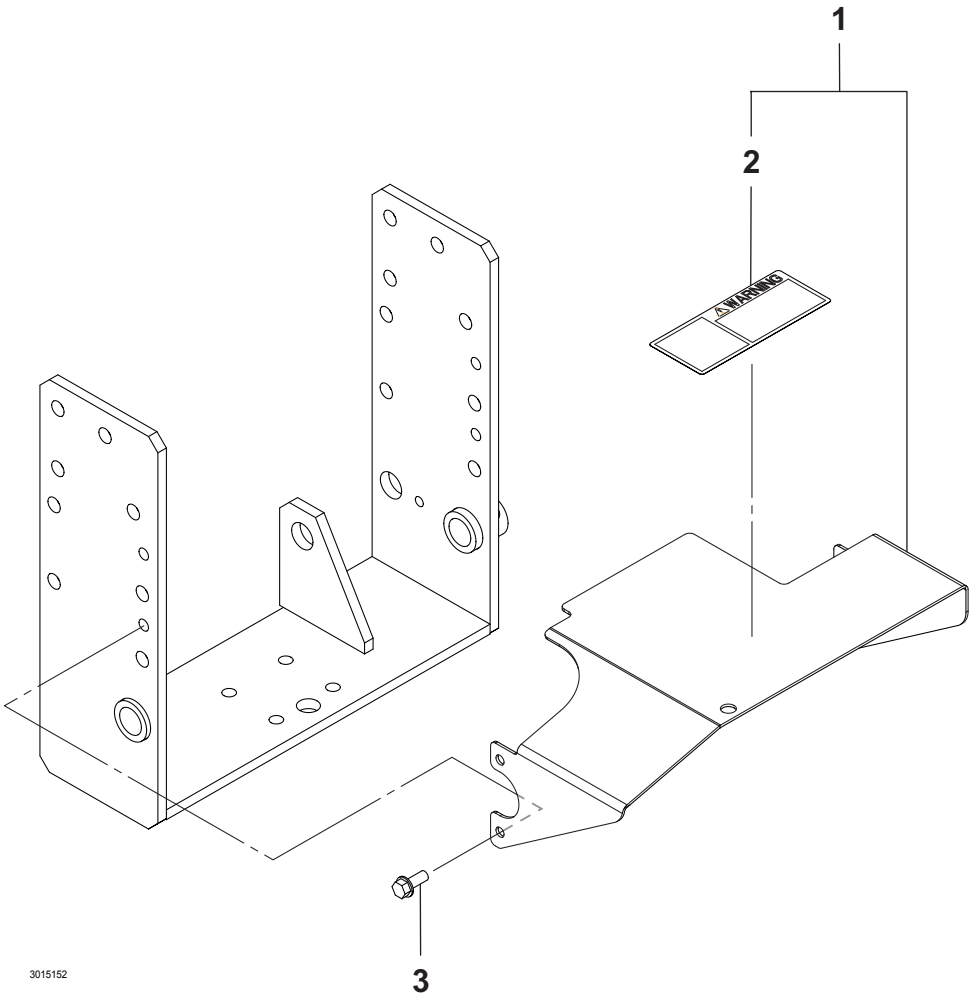

Fig. 1

REF.	Description	Q'TY.
1	Cover M ASSY., PTO	1
2	Label, PTO Warning	1
3	Bolt, 8 × 20 (L: 0.8 in.)	4

■ Power Take Off (PTO) Safety Cover

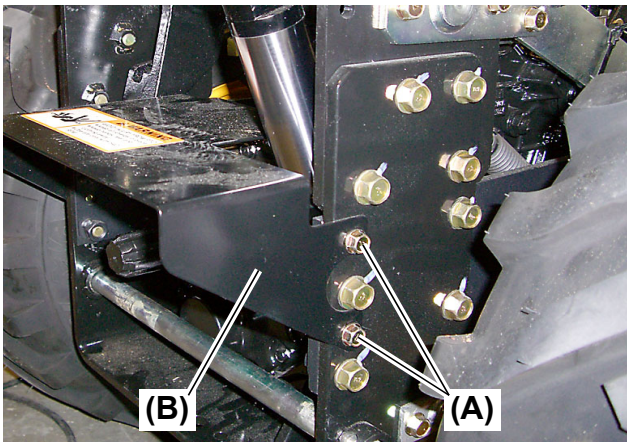

Fig. 2

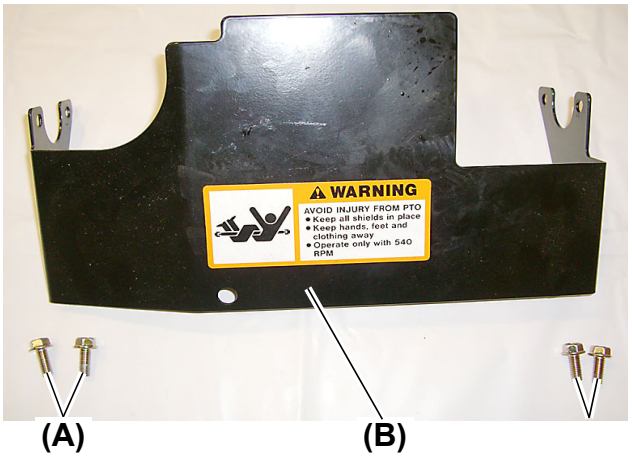

Fig. 3

(A) Bolt M8 × 20 mm (L: 0.8 in.)
(B) Power Take Off (PTO) safety cover

1. Remove the two (2) M8 × 20 mm (L: 0.8 in.) bolts **(Fig. 2, 3, (A))** on each of the right and left sides.

2. Remove the Power Take Off (PTO) safety cover **(Fig. 2, 3, (B))**.

43. Removing the Lift Cylinder

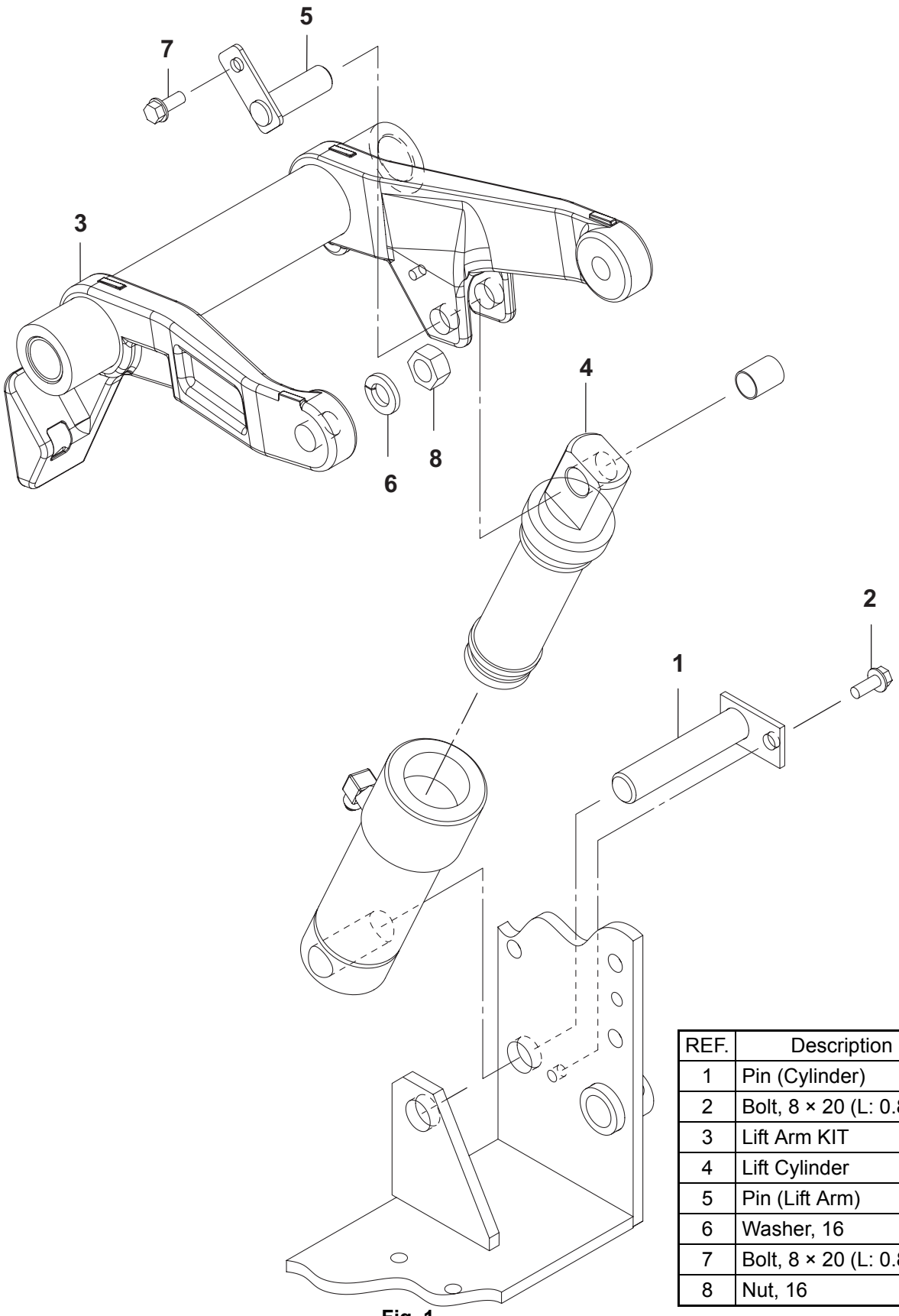

REF.	Description	Q'TY.
1	Pin (Cylinder)	1
2	Bolt, 8 × 20 (L: 0.8 in.)	1
3	Lift Arm KIT	1
4	Lift Cylinder	1
5	Pin (Lift Arm)	1
6	Washer, 16	2
7	Bolt, 8 × 20 (L: 0.8 in.)	1
8	Nut, 16	2

Fig. 1

■ Removing the Lift Cylinder

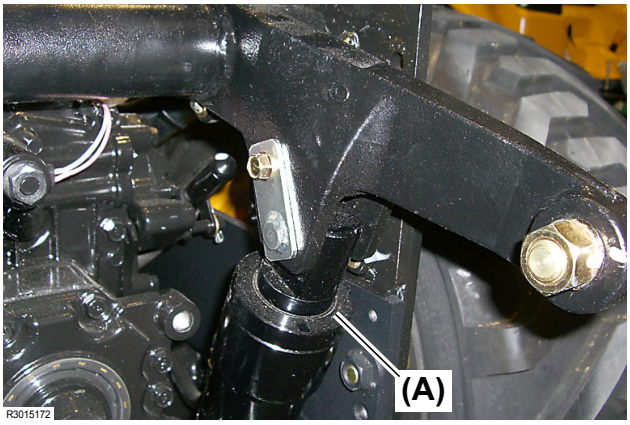

Fig. 2

(A) Lift cylinder

1. Place an oil pan under the lift cylinder **(Fig. 2, (A))** so as to receive oil.

■ Removing the Lift Cylinder

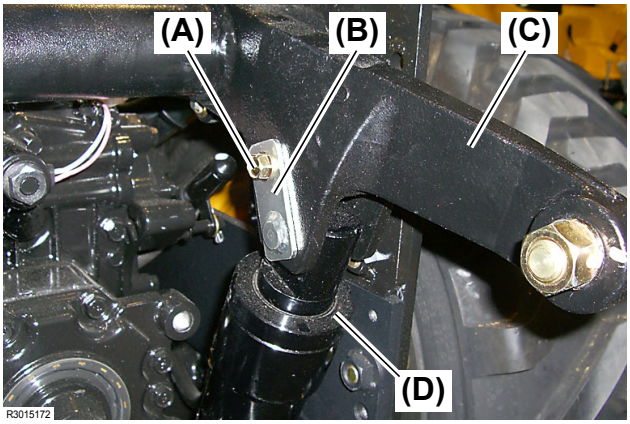

Fig. 3

(A) Bolt M8 × 20 mm (L: 0.8 in.)
(B) Lift arm pin
(C) Lift arm
(D) Lift cylinder

2. Remove the M8 × 20 mm (L: 0.8 in.) bolt **(Fig. 3, (A))**.

3. Pull out the lift arm pin **(Fig. 3, (B))** and separate the lift arm **(Fig. 3, (C))** and the lift cylinder **(Fig, 3, (D))**.

■ Removing the Lift Cylinder

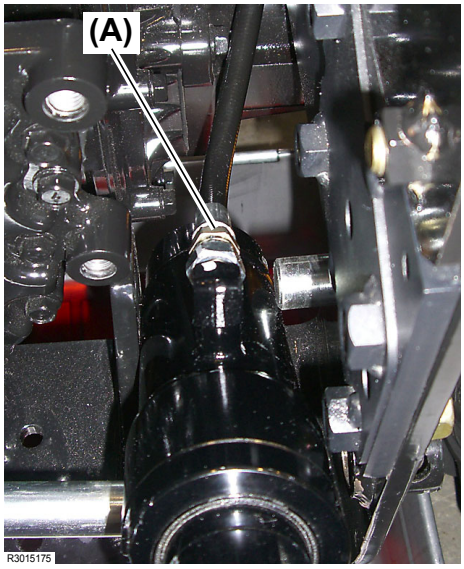

Fig. 4

(A) Hydraulic hose

4. Disconnect the hydraulic hose **(Fig. 4, (A))** from the transmission side of the lift cylinder. Tightening torque for installation: 16.7 to 20.3 ft•lbs (22.6 to 27.5 N•m)

■ Removing the Lift Cylinder

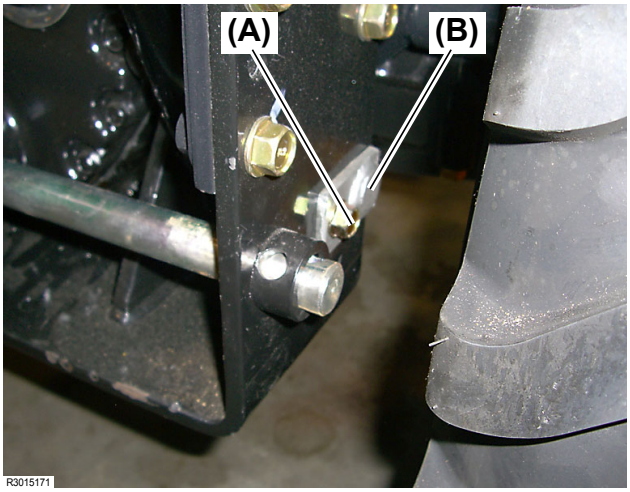

Fig. 5

(A) Bolt M8 × 20 mm (L: 0.8 in.)
(B) Cylinder pin

5. Remove the M8 × 20 mm (L: 0.8 in.) bolt **(Fig. 5, (A))**.

6. While supporting the lift cylinder with your hand, pull out the cylinder pin **(Fig. 5, (B))** to separate the lift cylinder from the frame of the tractor.

■ Removing the Lift Cylinder

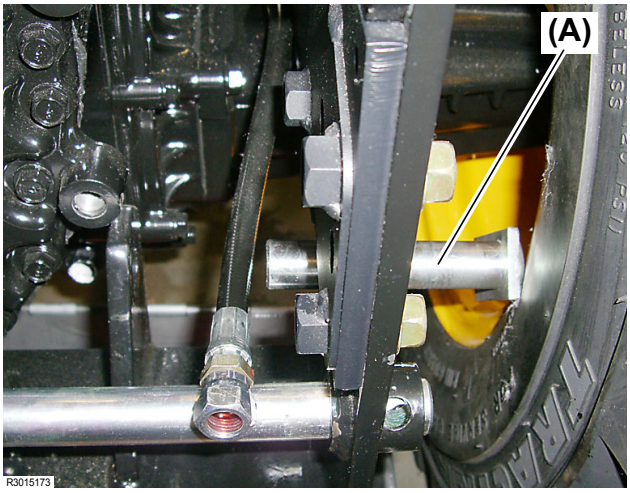

Fig. 6

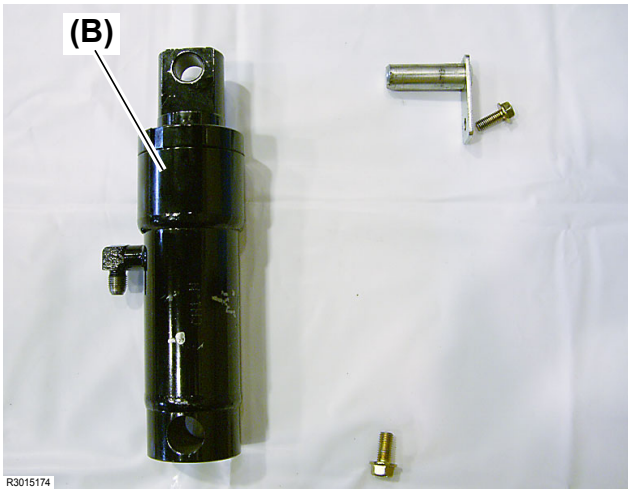

Fig. 7

(A) Cylinder pin
(B) Lift cylinder

NOTE:

- The lift cylinder **(Fig. 7, (B))** can be separated even with the cylinder pin **(Fig. 6, (A))** not incompletely pulled out.

* Photo **(Fig. 7)** shows the separated lift cylinder.

- Installation of lift cylinder is the reverse order of removal.
- Tightening torque of the hydraulic fitting is 16.7 to 20.3 ft•lbs (22.4 to 27.5 N•m).

44. Disassembling the Lift Cylinder

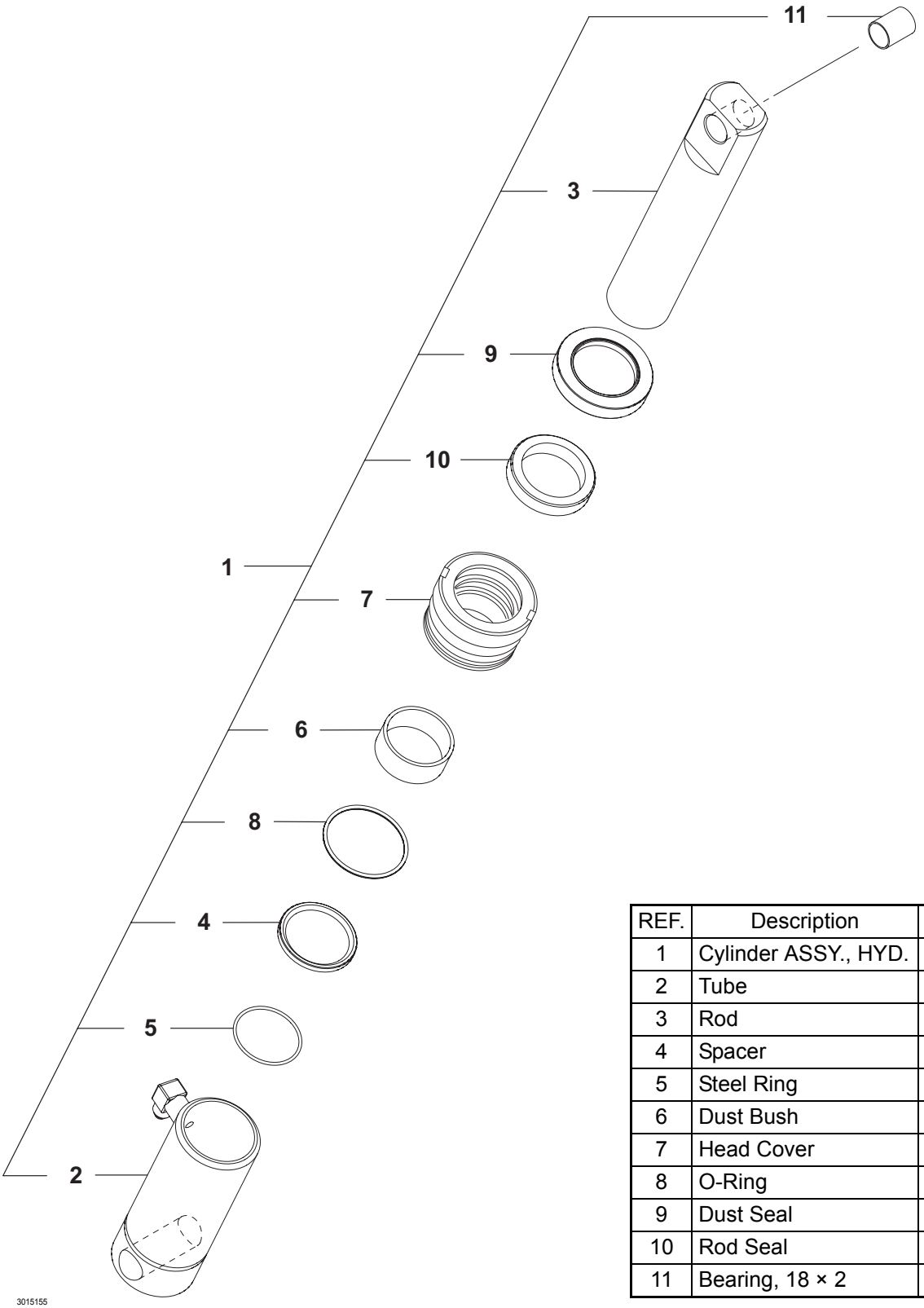

Fig. 1

REF.	Description	Q'TY.
1	Cylinder ASSY., HYD.	1
2	Tube	1
3	Rod	1
4	Spacer	1
5	Steel Ring	1
6	Dust Bush	1
7	Head Cover	1
8	O-Ring	1
9	Dust Seal	1
10	Rod Seal	1
11	Bearing, 18 × 2	1

■ Disassembling the Lift Cylinder

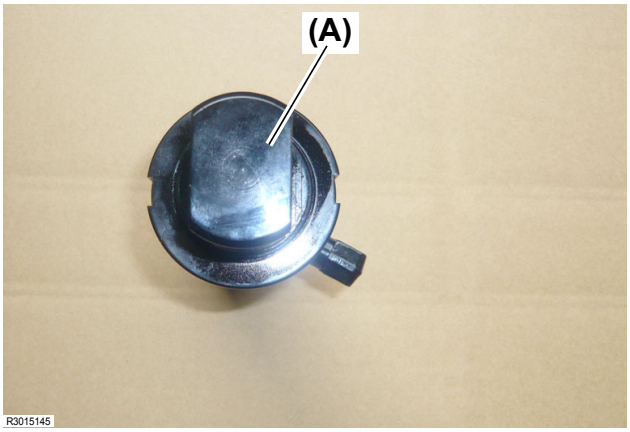

Fig. 2

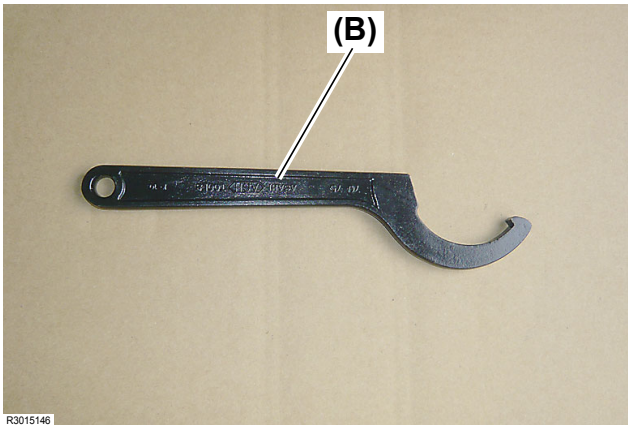

Fig. 3

(A) Lift cylinder head cover
(B) Hook wrench

1. Use a hook wrench **(Fig. 3, (B))** suitable for the lift cylinder head cover **(Fig. 2, (A))**.

■ Disassembling the Lift Cylinder

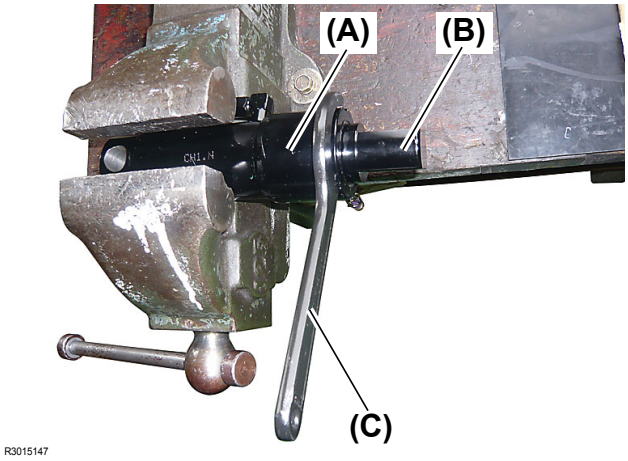

Fig. 4

(A) Lift cylinder
(B) Head cover
(C) Hook wrench

2. Secure the lift cylinder **(Fig. 4, (A))** in a vise and remove the head cover **(Fig. 4, (B))**.
   Tightening torque for installation: 236 to 380.3 ft•lbs (320 to 380 N•m)

■ Disassembling the Lift Cylinder

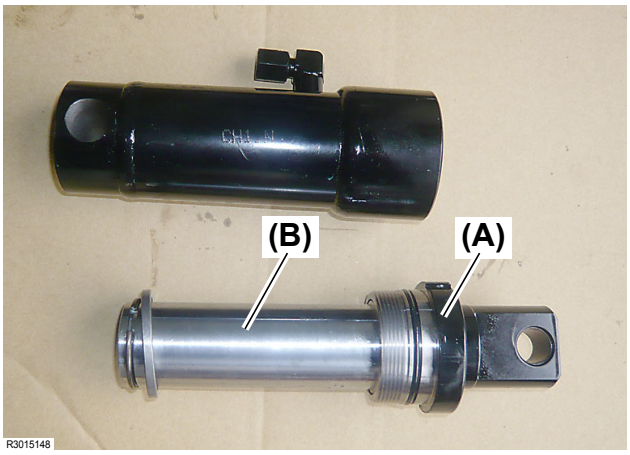

Fig. 5

(A) Head cover
(B) Rod

3. Once the head cover **(Fig. 5, (A))** is removed, all parts including the rod **(Fig. 5, (B))** are removed as a unit.

IMPORTANT

- Be careful not to damage the rod **(Fig. 5, (B))**. Damaging the rod **(Fig. 5, (B))** causes oil leakage. In such a case, replace the rod **(Fig. 5, (B))** with a new one.

■ Disassembling the Lift Cylinder

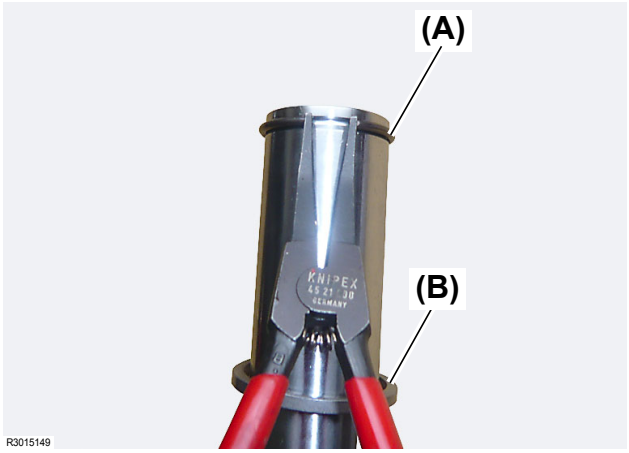

Fig. 6

(A) Steel ring
(B) Spacer

4. Remove the steel ring **(Fig. 6, (A))** and then remove the spacer **(Fig. 6, (B))** from the rod.

■ Disassembling the Lift Cylinder

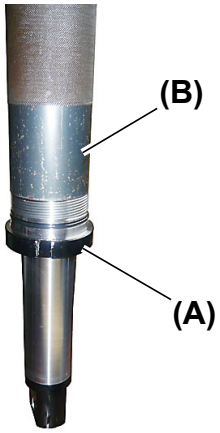

R3015150

Fig. 7

(A) Head cover
(B) Pipe

5. Set and tap down a pipe **(Fig. 7, (B))** with an internal diameter of 1.96 to 2.12 in. (49 to 53 mm) on the head cover **(Fig. 7, (A))**.

■ Disassembling the Lift Cylinder

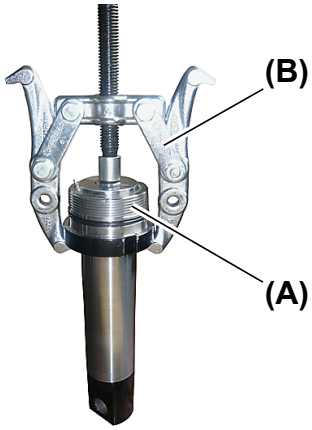

R3015151

Fig. 8



R3015152



R3015153

Fig. 9

(A) Head cover
(B) Bearing puller

6. After tapping down the head cover **(Fig. 8, 9, (A))** to the bottom end of the rod, use a bearing puller **(Fig. 8, (B))** to pull the head cover off the rod.

■ Disassembling the Lift Cylinder

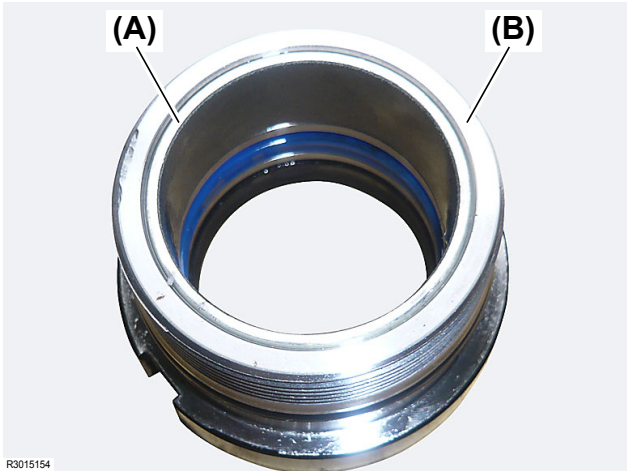

Fig. 10

(A) Bush
(B) Head cover

7. The press-fitted head **(Fig. 10, (B))** cover dust bush **(Fig. 10, (A))** cannot be taken out.

IMPORTANT

- If the inner surface of the dust bush **(Fig. 10, (A))** is damaged, order a new bush together with a new head cover as service parts and assemble them.

■ Disassembling the Lift Cylinder

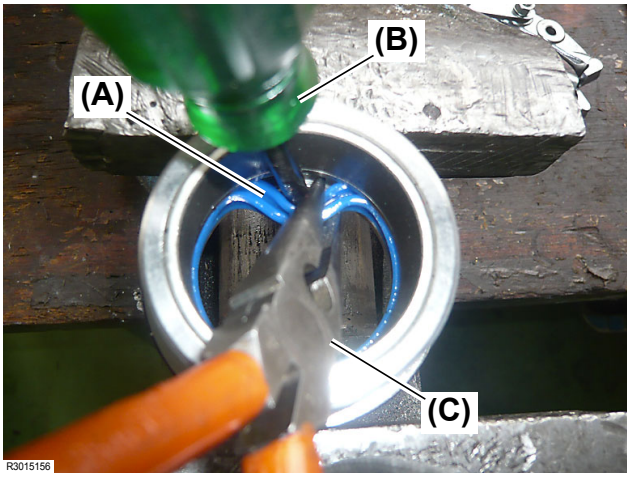

Fig. 11

(A) Rod seal
(B) Flatblade screwdriver
(C) Needle-nose pliers

8. Stick a flatblade screwdriver **(Fig. 11, (B))** etc. to the rod seal **(Fig. 11, (A))** and pull out the rod seal **(Fig. 11, (A))** with a pair of needle-nose pliers **(Fig. 11, (C))** etc.

⚠ CAUTION

●The head cover easily slips. Therefore, secure it in a vise etc.

NOTE:

●Rod seal: Blue
●Dust seal: Black

■ Disassembling the Lift Cylinder

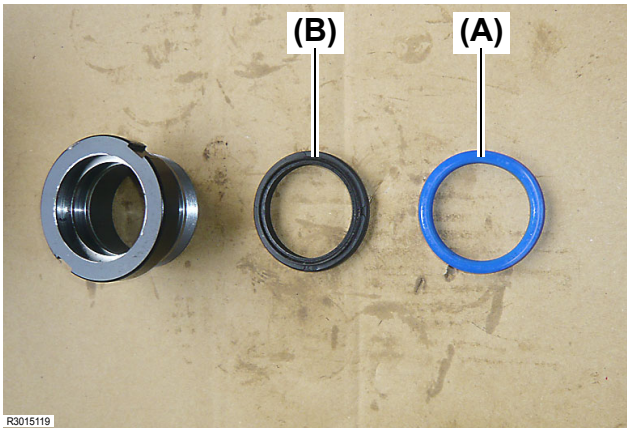

Fig. 12

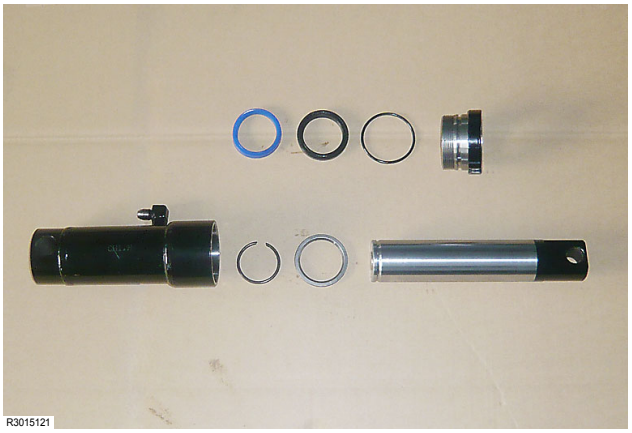

Fig. 13

(A) Rod seal: Blue
(B) Dust seal: Black

9. Similarly, remove the dust seal **(Fig. 12, (B))**.

* Photo **(Fig. 13)** shows the disassembled lift cylinder.

■ Disassembling the Lift Cylinder



Fig. 14



Fig. 15

(A) Head cover side
(B) Tube side

10.For assembling, pay attention to the following:
- Be careful about the orientation of the rod and dust seals.

■ Disassembling the Lift Cylinder

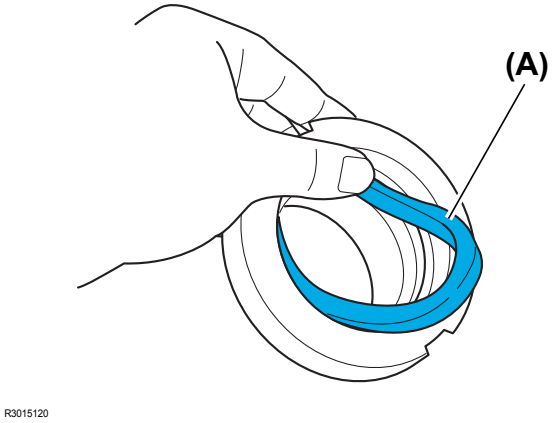

Fig. 16

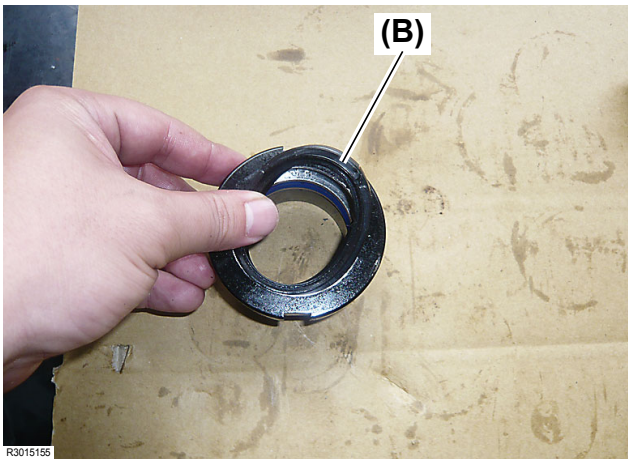

Fig. 17

(A) Rod seal
(B) Dust seal

- The rod seal **(Fig. 16, (A))** and dust seal **(Fig. 17, (B))** are hard so that their installation is difficult. Fully apply transmission oil to them and install them by referring to the photo **Fig. 16, 17**.

IMPORTANT

Avoid Damage!

- Overtightening the cylinder the head cover may cause the cylinder to become damaged or broken.
  Tightening torque: 71.94 - 80.93 ft•lbs (320 - 360 N•m)
- Reassemble the lift cylinder in reverse order of disassembly. Replace all seals and O-rings with new ones.
- Tightening torque of the head cover to the cylinder is 236 to 380 ft•lbs (320 to 380 N•m).
- If the steel ring was removed during disassembly, replace it with a new one.

45. Removing the Implement Control Valve Quick Coupler

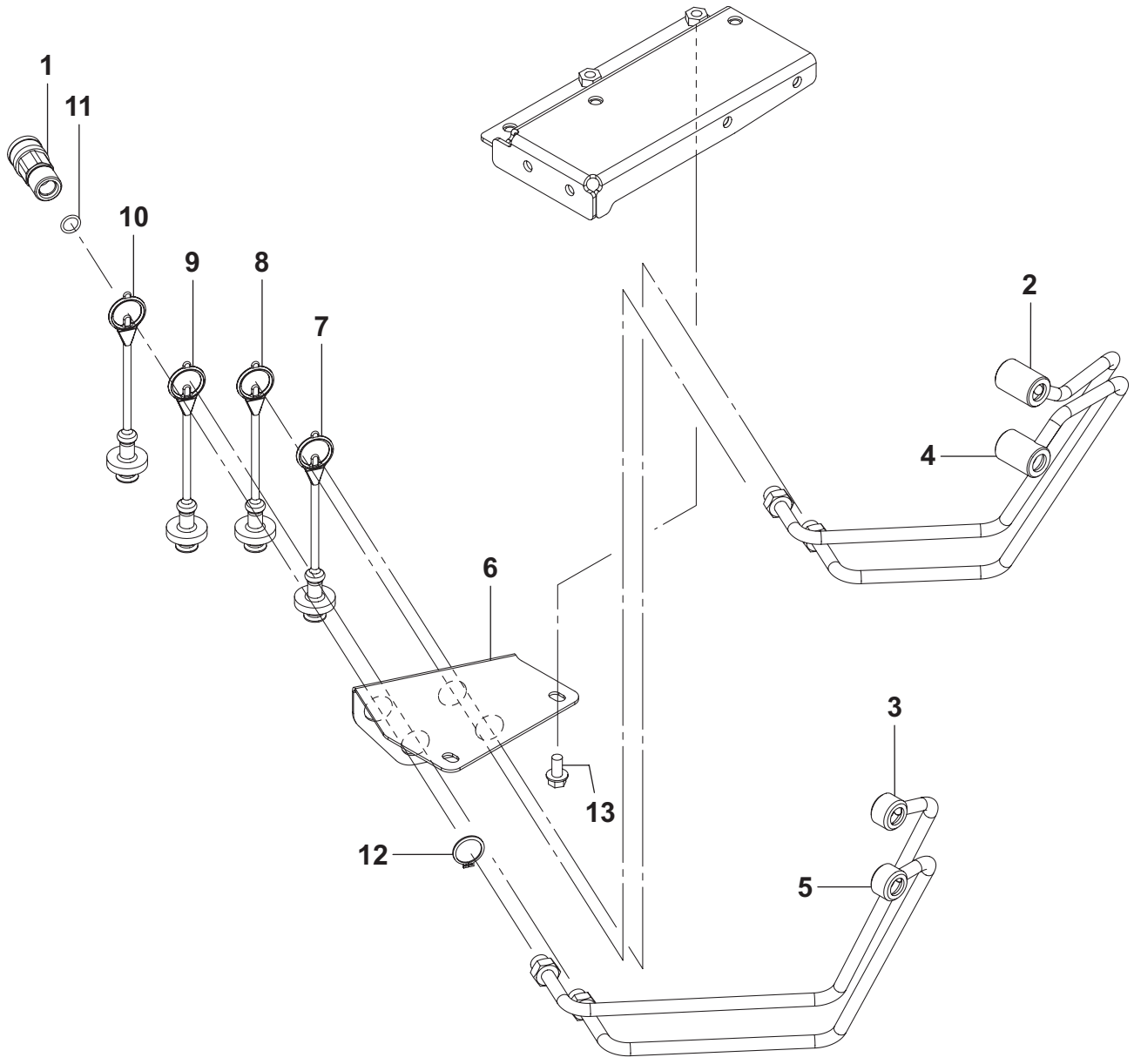

Fig. 1

REF.	Description	Q'TY.
1	Coupler, HYD. Quick	4
2	HP Pipe Implement Control Valve A1	1
3	HP Pipe Implement Control Valve A2	1
4	HP Pipe Implement Control Valve B1	1
5	HP Pipe Implement Control Valve B2	1
6	Stay (Implement Control Valve Coupler)	1
7	Plug, Dust Red	1

REF.	Description	Q'TY.
8	Plug, Dust Blue	1
9	Plug, Dust Yellow	1
10	Plug, Dust Green	1
11	O-Ring, 6-1	4
12	Ring, 22	4
13	Bolt, 8 × 16 (L: 0.64 in.)	2

■ Removing the Implement Control Valve Quick Coupler

1. Place an oil drain pan under the quick coupler so as to receive oil.

■ Removing the Implement Control Valve Quick Coupler

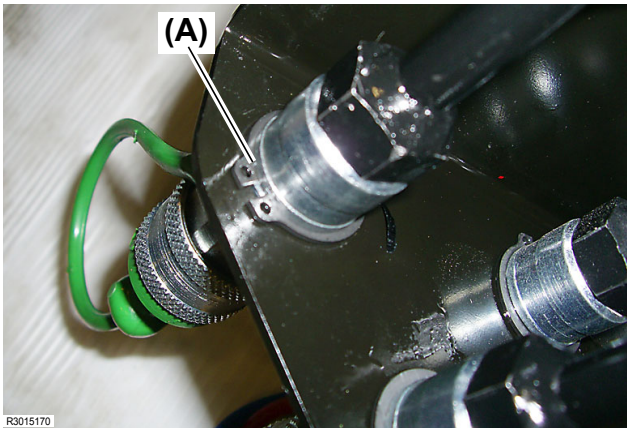

Fig. 2

(A) External circlip 22

2. Remove the external circlip 22 **(Fig. 2, (A))** having retained the back end of the quick coupler to the Implement Control Valve coupler stay.

■ Removing the Implement Control Valve Quick Coupler

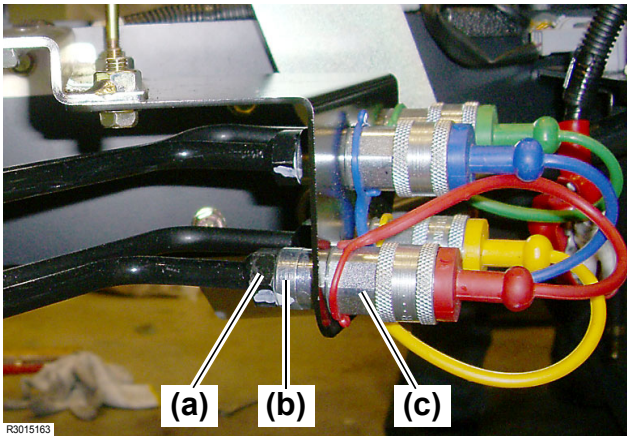

Fig. 3

(a) Position for engaging the wrench on the piping
(b) Position for engaging the wrench on the quick coupler

3. Engage a wrench on the section (a) **(Fig. 3, (a))** of the piping and the section (b) **(Fig. 3, (b))** of the quick coupler. With a second wrench, remove the quick coupler from the piping.

IMPORTANT

- There is an O-ring in the section (c) **(Fig. 3, (c))**.

■ Removing the Implement Control Valve Quick Coupler

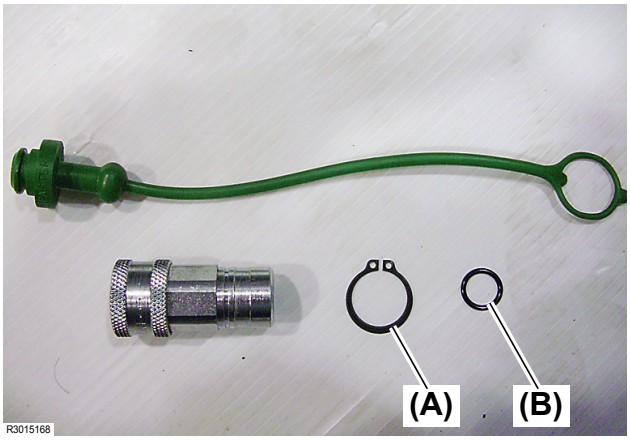

Fig. 4

(A) External circlip 22
(B) O-ring

4. When installing, replace the external circlip 22 **(Fig. 4, (A))** and the O-ring **(Fig. 4, (B))** with new ones. Tightening torque for installation: 28.8 to 36.1 ft•lbs (39 to 49 N•m)

46. Removing the Implement Control Valve Assembly

⚠ DANGER

- **Remove any implement is installed to the tractor, and the hydraulic hose is connected to the quick coupler of the implement control valve, in advance.**

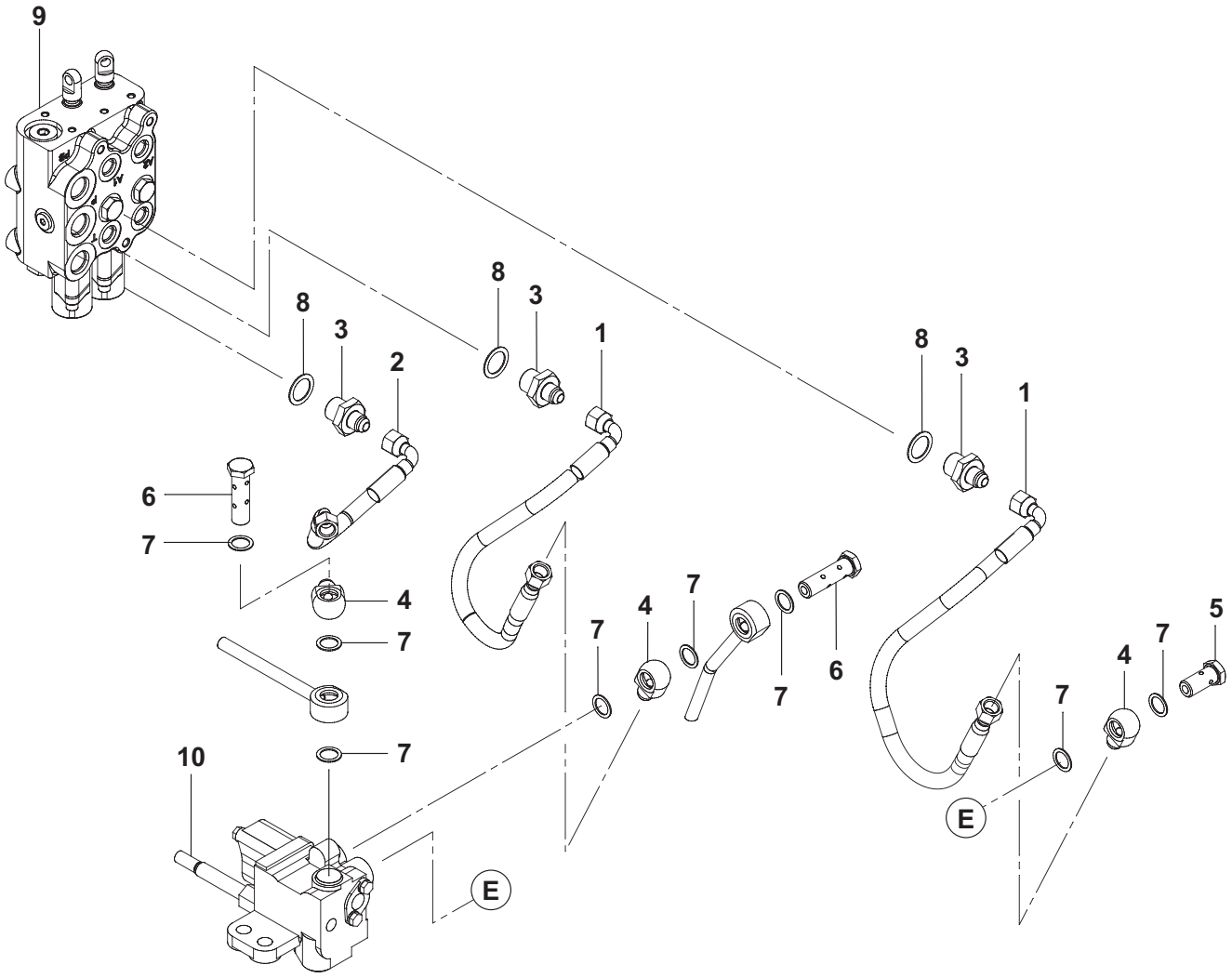

Fig. 1

REF.	Description	Q'TY.
1	LP Hose, Implement Control	2
2	LP Hose, Implement Control	1
3	Joint 3/4 UNF - 9/16 UNF	3
4	Joint 9/16 UNF - 14.5	3
5	Ball Joint Bolt 9/16	1
6	Ball Joint Bolt L 9/16	2
7	Gasket, 14 × 1.0	8
8	Gasket, 19 × 1.0	3

REF.	Description	Q'TY.
9	Implement Control Valve	1
10	Control Valve	1

■ Removing the Implement Control Valve Assembly

1. Place an oil drain pan under the implement control valve and control valve so as to receive oil.

■ Removing the Implement Control Valve Assembly

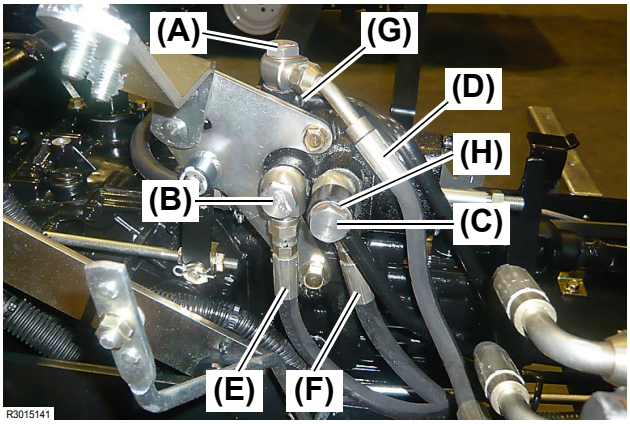

Fig. 2

(A) Ball joint bolts
(B) Ball joint bolts
(C) Ball joint bolts
(D) Hydraulic line of the implement control valve
(E) Hydraulic line of the implement control valve
(F) Hydraulic line of the implement control valve
(G) Hydraulic line of the tractor unit
(H) Hydraulic line of the tractor unit

2. Remove the ball joint bolts **(Fig. 2, (A), (B) and (C))** and remove the hydraulic lines **(Fig. 2, (D), (E) and (F))** of the implement control valve from the control valve.

NOTE:

- The hydraulic piping of the implement control valve has been tightened together with the hydraulic piping of the tractor unit.

IMPORTANT

- Tightening torque for installation is as follows:
  (A) 36.1 to 43.5 ft•lbs (49 to 59 N•m)
  (B) 28.8 to 36.1 ft•lbs (39 to 49 N•m)
  (C) 36.1 to 43.5 ft•lbs (49 to 59 N•m)

■ Removing the Implement Control Valve Assembly

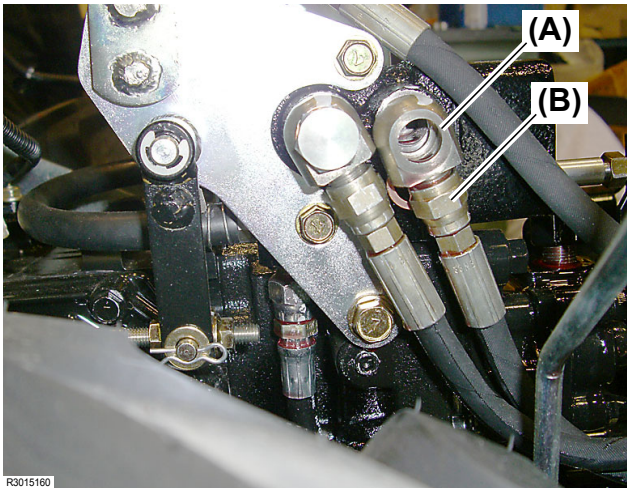

Fig. 3

(A) Hose
(B) Joint

3. If the hose **(Fig. 3, (A))** and the joint **(Fig. 3, (B))** have been separated, install and tighten them to the following torque:
   26 to 318 ft•lbs (35.3 to 43.1 N•m)

■ Removing the Implement Control Valve Assembly

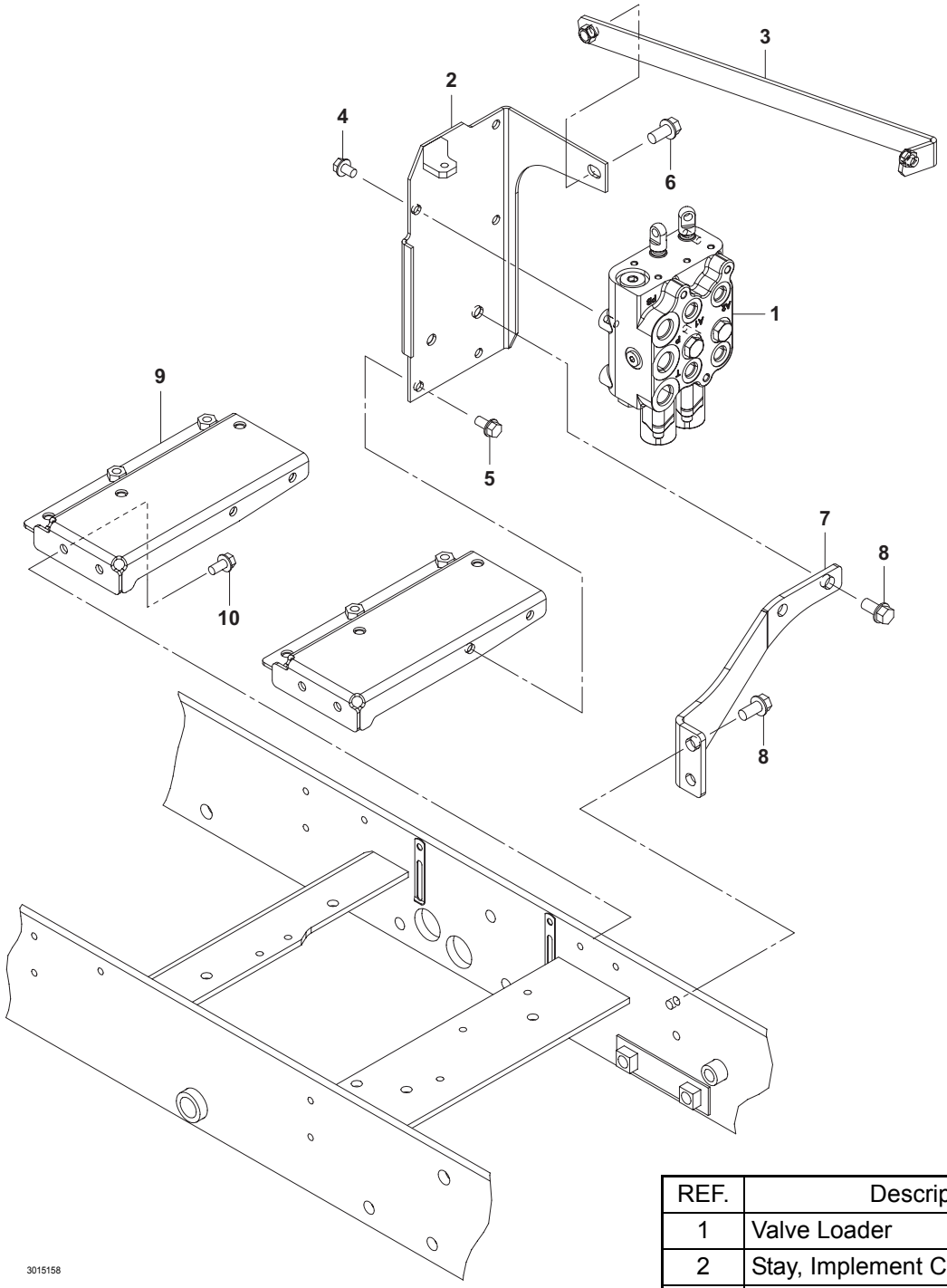

REF.	Description	Q'TY.
1	Valve Loader	1
2	Stay, Implement Control Valve	1
3	Plate Implement Control Valve	1
4	Bolt, 8 × 12 (L: 0.48 in.)	3
5	Bolt, 8 × 16 (L: 0.64 in.)	2
6	Bolt, 10 × 20 (L: 0.8 in.)	2
7	Plate, Support Implement Control	1
8	Bolt, 10 × 20 (L: 0.8 in.)	4
9	Stay RR, Step	1
10	Bolt, 8 × 16 (L: 0.64 in.)	2

Fig. 4

■ Removing the Implement Control Valve Assembly

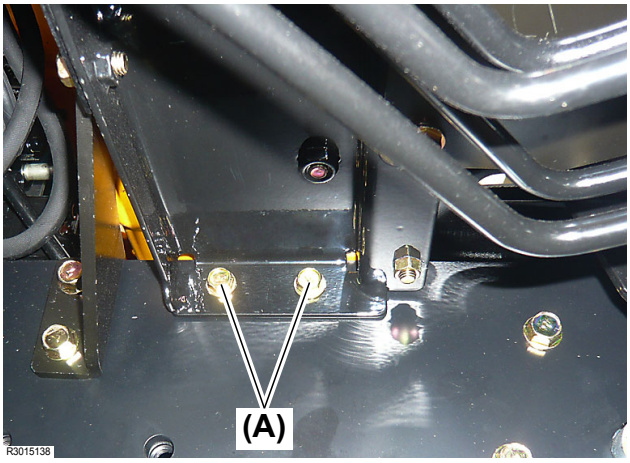

Fig. 5

(A) Bolt M8 × 16 mm (L: 0.64 in.)

4. Remove the two (2) M8 × 16 mm (L: 0.64 in.) bolts **(Fig. 5, (A))**.

■ Removing the Implement Control Valve Assembly

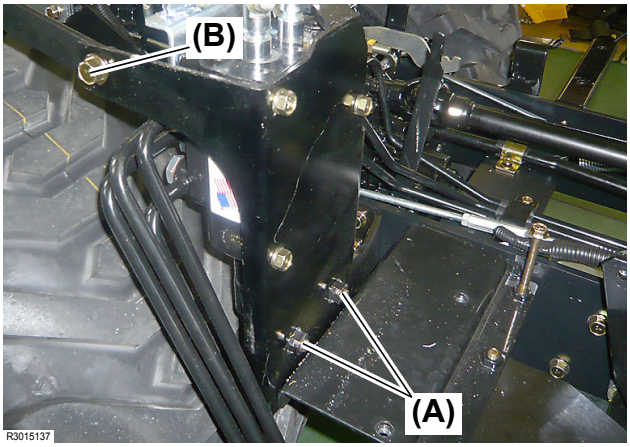

Fig. 6

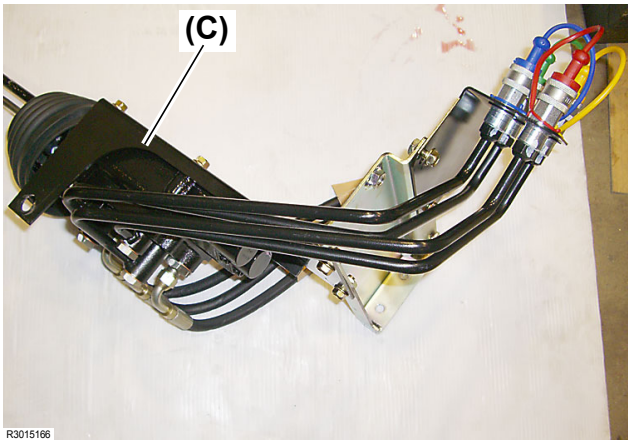

Fig. 7

(A) M10 × 20 mm bolts (L: 0.8 in.)
(B) M10 × 20 mm bolt (L: 0.8 in.)
(C) Implement control valve assembly

5. Remove the two (2) M10 × 20 mm (L: 0.8 in.) bolts **(Fig. 6, (A))** from the rear tire side.

6. Remove the M10 × 20 mm (L: 0.8 in.) bolt **(Fig. 6, (B))** and then the implement control valve assembly **(Fig. 7, (C))**.

⚠ CAUTION

- **Removal of the M10 × 20 mm (L: 0.8 in.) bolt (Fig. 7, (B)) should be carried out by two (2) persons in order to prevent the implement control valve assembly (Fig. 7, (C)) from falling.**

■ Removing the Implement Control Valve Assembly

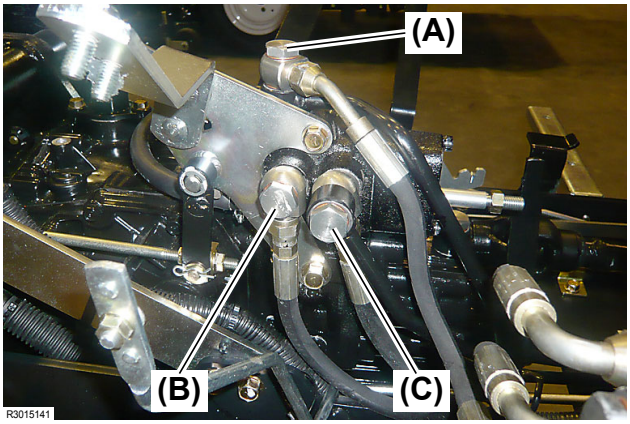

Fig. 8

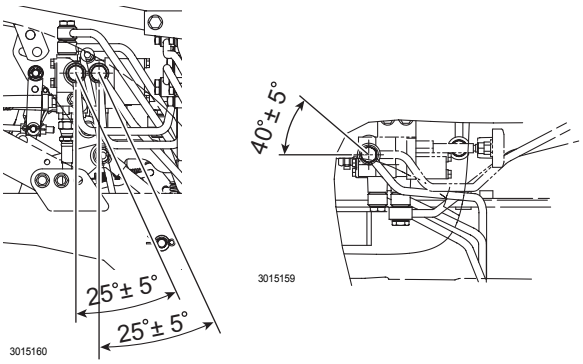

Fig. 9

(A) Three (3) copper seals
(B) Two (2) copper seals
(C) Three (3) copper seals

7. For assembling, pay attention to the following:
   - The copper seals of each of the ball joint bolts should be replaced with a new one.
   - Installation angles of individual hydraulic hoses of the implement control valve should be according to the illustration **Fig. 9**.

47. Disassembling the Implement Control Valve Assembly

Internal operating parts of the implement control valve are not serviceable. Do not disassemble the implement control valve.

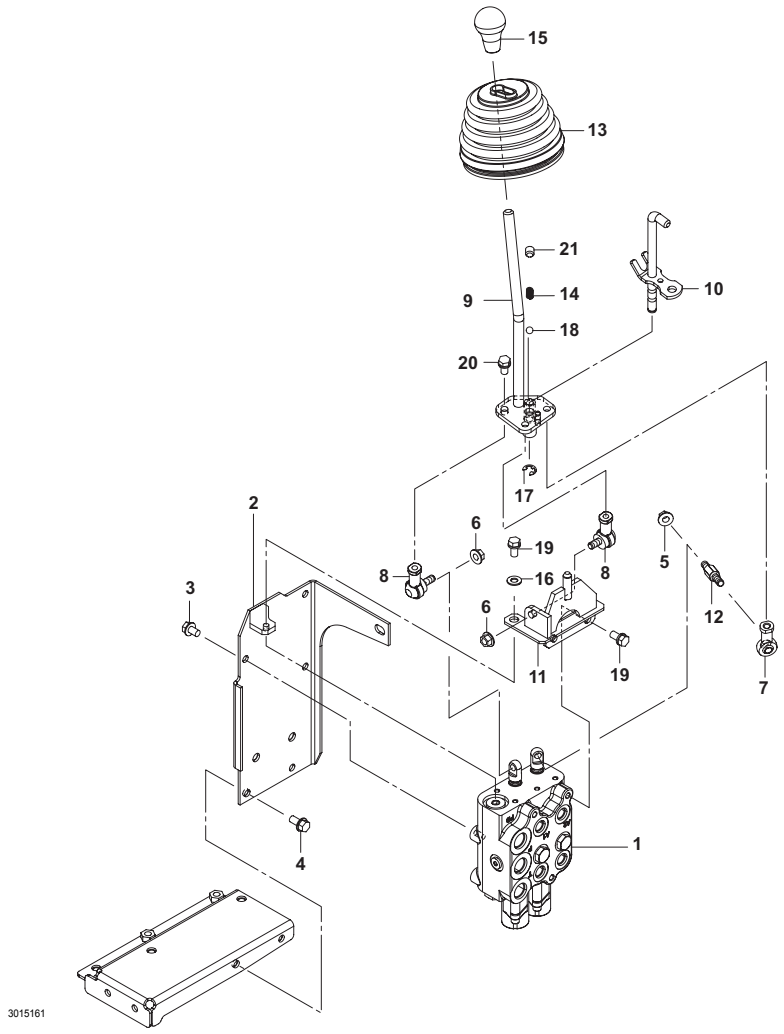

Fig. 1

REF.	Description	Q'TY.
1	Valve Loader	1
2	Stay, Implement Control Valve	1
3	Bolt, 8 × 12 (L: 0.48 in.)	3
4	Bolt, 8 × 16 (L: 0.64 in.)	2
5	Nut, M8	1
6	Nut, M8	2
7	End, Rod 8R	1
8	Elbow, 8	2
9	Lever, Implement Control	1
10	Pin Lock	1
11	BKT, Implement Control Lever	1

REF.	Description	Q'TY.
12	Bolt, Implement Control Lever	1
13	Boots, Implement Control Lever	1
14	Spring, Fork	1
15	Knob	1
16	Washer, 8	1
17	Ring, 8	1
18	Ball, 5/16	1
19	Bolt, 8 × 16 (L: 0.64 in.)	3
20	Bolt, 8 × 16 (L: 0.64 in.)	3
21	Screw, 10 × 10	1

■ Disassembling the Implement Control Valve Assembly

1. Place an oil drain pan under the implement control valve.

■ Disassembling the Implement Control Valve Assembly

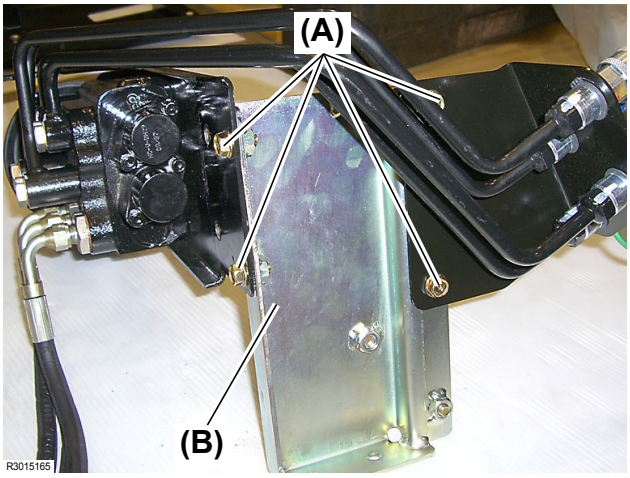

Fig. 2

(A) Bolt M8 × 16 mm (L: 0.64 in.)
(B) Step stay

2. Remove the four (4) M8 × 16 mm (L: 0.64 in.) bolts **(Fig. 2, (A))** and then the step stay **(Fig. 2, (B))**.

■ Disassembling the Implement Control Valve Assembly

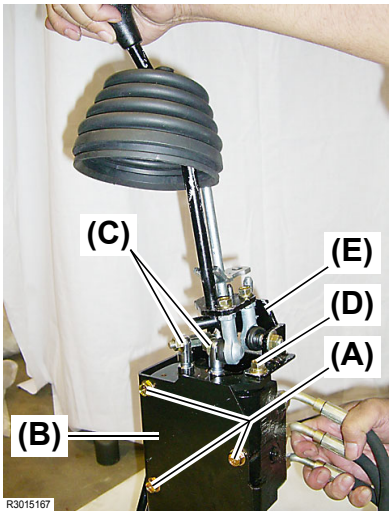

Fig. 3

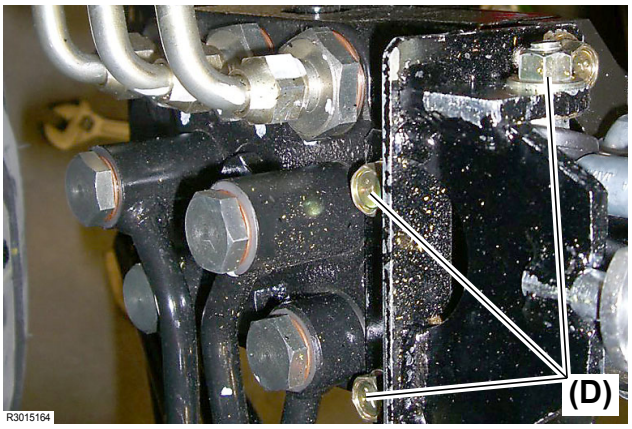

Fig. 4

(A) Bolt M8 × 12 mm (L: 0.48 in.)
(B) Implement control valve stay
(C) Nut M8
(D) Bolt M8 × 16 mm (L: 0.64 in.)
(E) Implement control lever bracket

3. Remove the three (3) M8 × 12 mm (L: 0.48 in.) bolts **(Fig. 3, (A))** and then remove the implement control valve stay **(Fig. 3, (B))**.

4. Remove the two (2) M8 nuts **(Fig. 3, (C))**.

5. Remove the three (3) M8 × 16 mm (L: 0.64 in.) bolts **(Fig. 3, 4, (D))** and separate the implement control lever bracket **(Fig. 3, (E))** together with the lever link.

■ Disassembling the Implement Control Valve Assembly

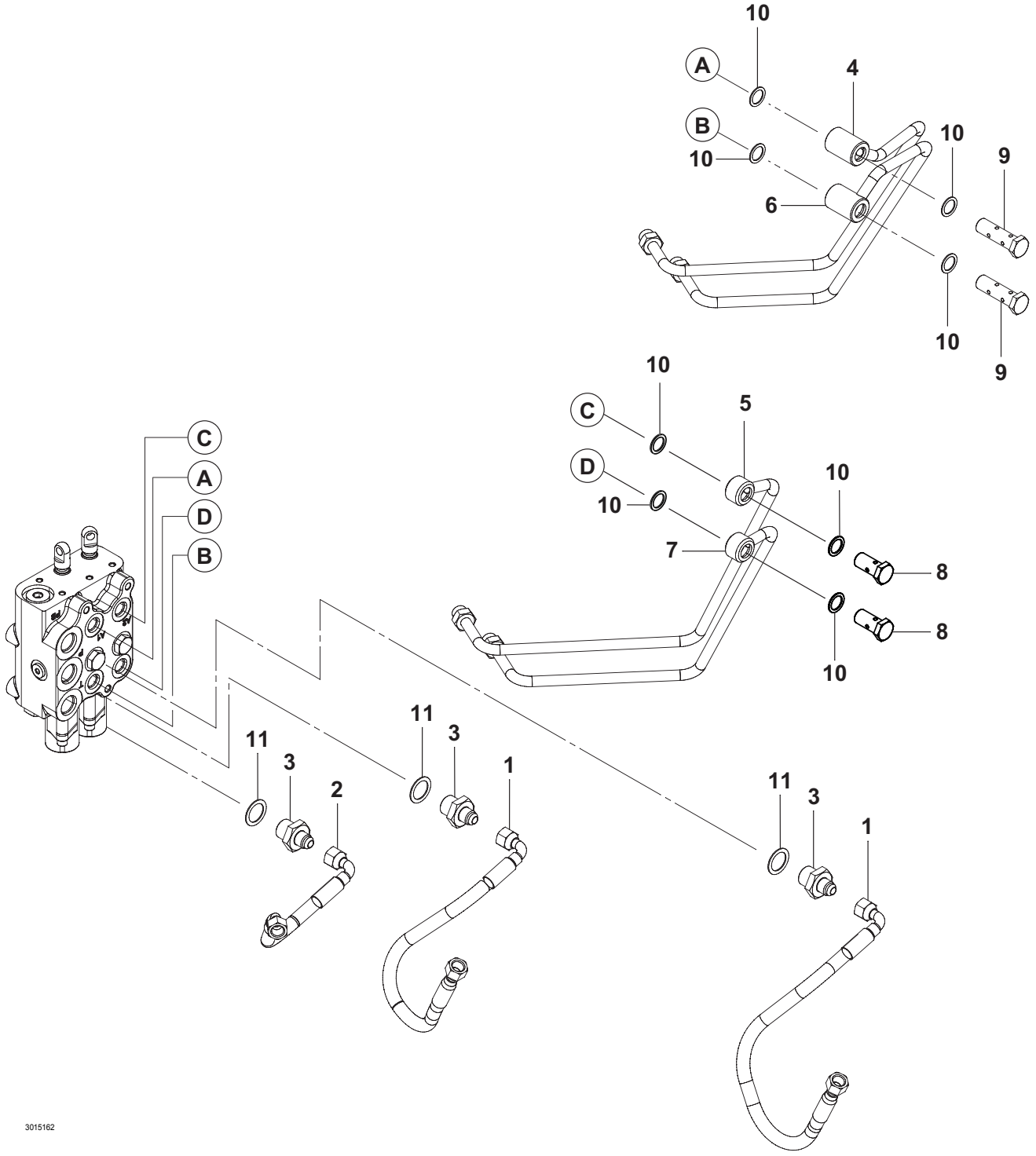

Fig. 5

REF.	Description	Q'TY.
1	LP Hose, Implement Control	2
2	LP Hose, Implement Control	1
3	Joint 3/4 UNF - 9/16UNF	3
4	HP Pipe, Implement Control A1	1
5	HP Pipe, Implement Control A2	1

REF.	Description	Q'TY.
6	HP Pipe, Implement Control B1	1
7	HP Pipe, Implement Control B2	1
8	Ball Joint Bolt 9/16	2
9	Ball Joint Bolt L 9/16	3
10	Copper Seal, 14 × 1.0	8
11	Copper Seal, 19 × 1.0	3

■ Disassembling the Implement Control Valve Assembly

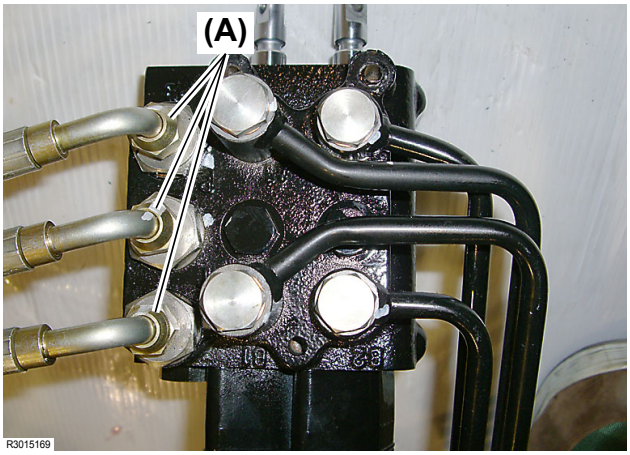

Fig. 6

(A) Hydraulic hose threads of the implement control valve

6. Unscrew and disconnect the three (3) hydraulic hose threads **(Fig. 6, (A))** of the implement control valve. Tightening torque for installation: 26 to 31.8 ft•lbs (35.3 to 43.1 N•m)

■ Disassembling the Implement Control Valve Assembly

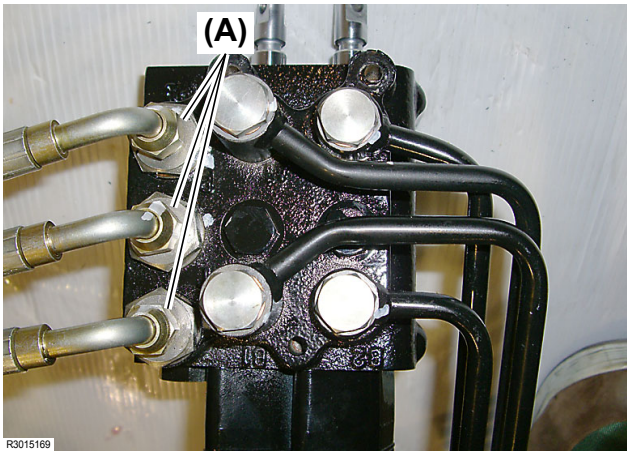

Fig. 7

(A) Joint

7. Remove the three (3) joints **(Fig. 7, (A))**.
   Tightening torque for installation: 57.5 to 64.9 ft•lbs (78 to 88 N•m)

NOTE:

●There is a gasket between the joint and Implement Control Valve.

■ Disassembling the Implement Control Valve Assembly

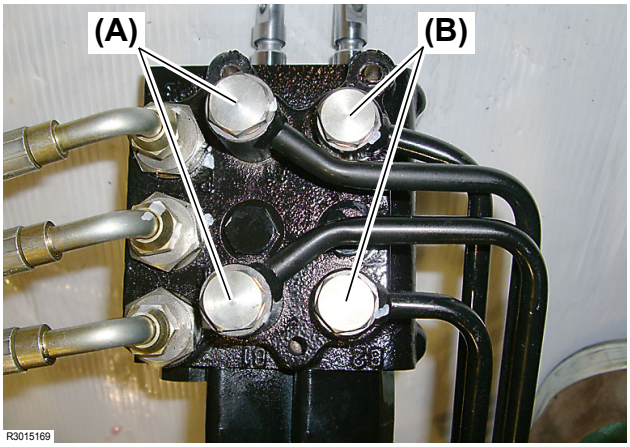

Fig. 8

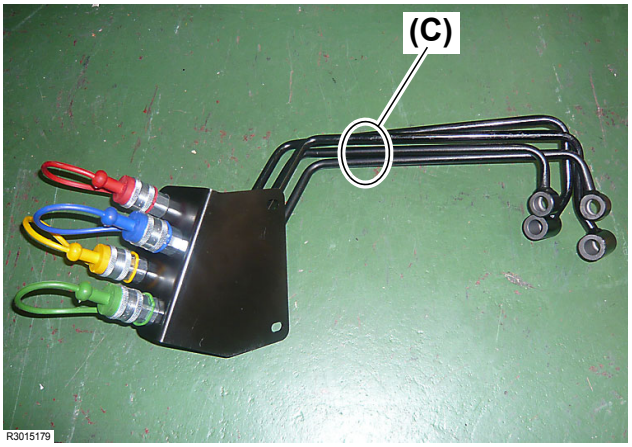

Fig. 9

(A) Ball joint bolt
(B) Ball joint bolt
(C) Hydraulic lines of the implement control valve

8. Remove each two (2) ball joint bolts **(Fig. 8, (A), (B))** and disconnect the four (4) hydraulic lines **(Fig. 8, (C))** of the implement control valve.
   Tightening torque for installation: 28.8 to 36.1 ft•lbs (39 to 49 N•m)

NOTE:

- The ball joint bolts (A) **(Fig. 8, (A))** are longer than the ball joint bolts (B) **(Fig. 8, (B))**.
- Each hydraulic line of the implement control valve has two (2) copper seals.

■ Disassembling the Implement Control Valve Assembly

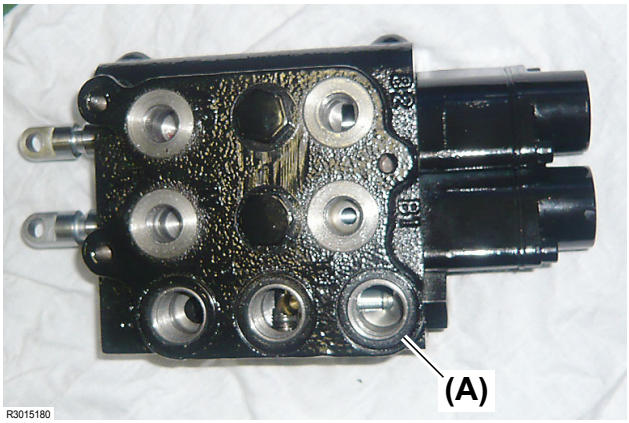

Fig. 10

(A) Implement control valve

9. The implement control valve **(Fig. 10, (A))** is supplied in an assembly for parts replacement.

■ Disassembling the Implement Control Valve Assembly

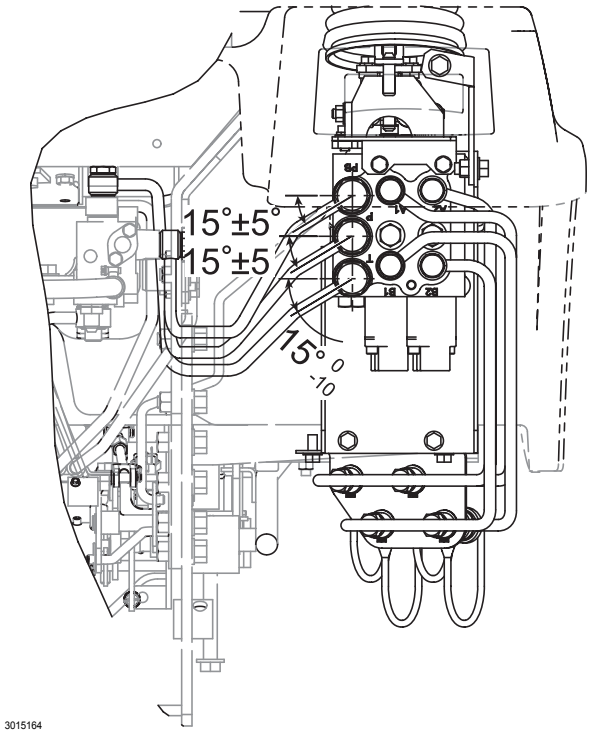

Fig. 11

10.For assembling, pay attention to the following:
- Installation angles of individual hydraulic hoses of the implement control valve should be according to the illustration **Fig. 11**.
- The copper seals should be replaced with a new one.

11.Reassembly of the implement control valve is the reverse order of disassembly of the implement control valve.

48. Removing the Control Valve

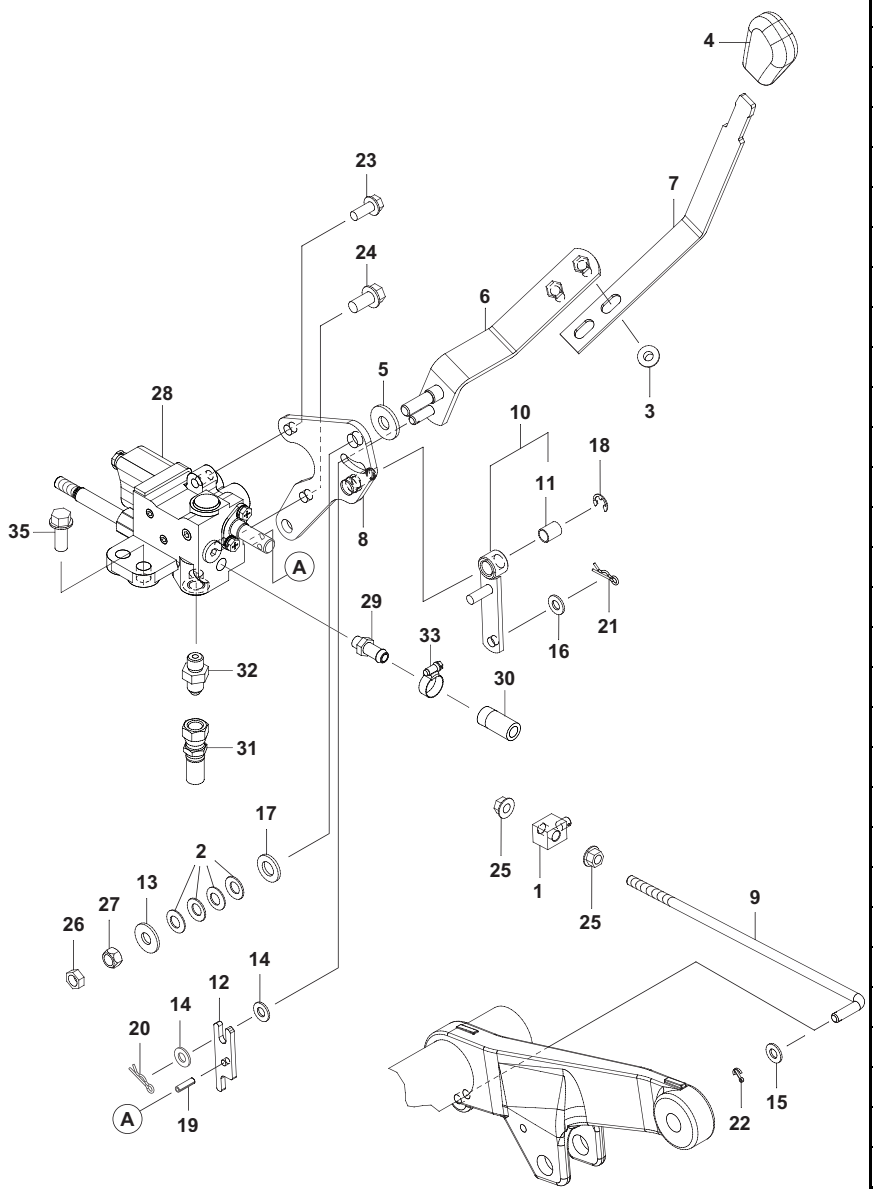

Fig. 1

REF.	Description	Q'TY.
1	Adjuster	1
2	Washer, Conical 10	4
3	Nut, M8	2
4	Knob, Black	1
5	Plate, Friction	1
6	Lever, Position	1
7	Lever, Position	1
8	Stay HYD. Link	1
9	Rod, Feedback	1
10	Lever ASSY., Control	1
11	Bearing, 10 × 15	1
12	Lever, Spool	1
13	Washer, 10	1
14	Washer, 8	2
15	Washer, 8	1
16	Washer, 8	1
17	Washer, 12	1
18	Ring, 8	1
19	Pin, 5.0A × 18	1
20	Pin, 8	1
21	Pin, 8	1
22	Pin, 2.0 × 16	1
23	Bolt, 8 × 20 (L: 0.8 in.)	2
24	Bolt, 10 × 20 (L: 0.8 in.)	1
25	Nut, 8	2
26	Nut, 10	1
27	Nut, Lock 10	1
28	Control Value	1
29	Joint, R 1/8	1
30	LP Hose, Drain	1
31	HP Hose, Clynder	1
32	Connector PF 1/4	1
33	Clamp, Hose 19	2
34	Valve ASSY., Lift	N / S
35	Bolt, 10 × 25 (L: 1.0 in.)	2

■ Removing the Control Valve

1. Place an oil drain pan under the control valve so as to receive oil.

■ Removing the Control Valve

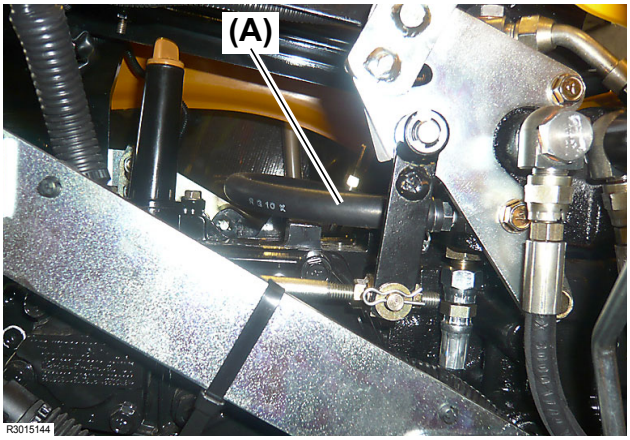

Fig. 2

(A) Hydraulic hose

2. Disconnect the hydraulic hose **(Fig. 2, (A))** from the rear of the control valve.
   Tightening torque of the hose clamp: 1.1 to 1.8 ft•lbs (1.5 to 2.5 N•m)

■ Removing the Control Valve

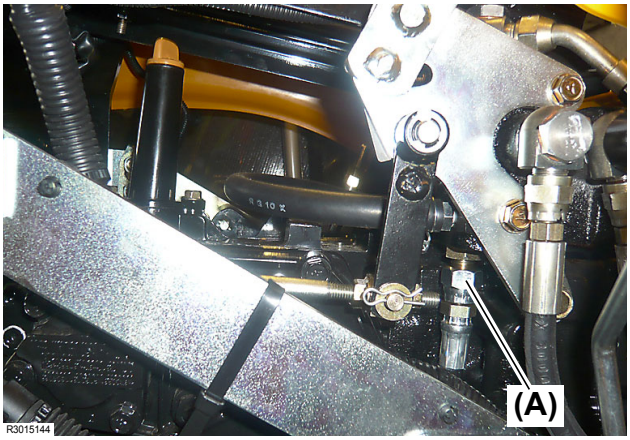

Fig. 3

(A) Hydraulic hose

3. Disconnect the hydraulic hose **(Fig. 3, (A))** having been connected to the lift cylinder from the bottom of the control valve.
   Tightening torque for installation: 16.7 to 20.3 ft•lbs (22.6 to 27.5 N•m)

■ Removing the Control Valve

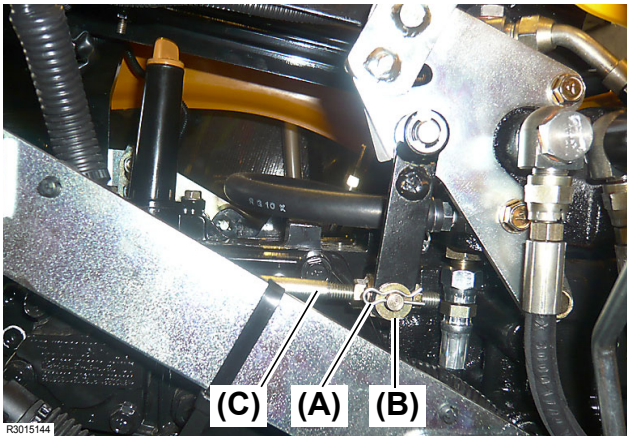

Fig. 4

(A) Snap pin
(B) Washer
(C) Feed back rod

4. Remove the snap pin **(Fig. 4, (A))** and the washer **(Fig. 4, (B))**. Then separate the feed back rod **(Fig. 4, (C))**.

■ Removing the Control Valve

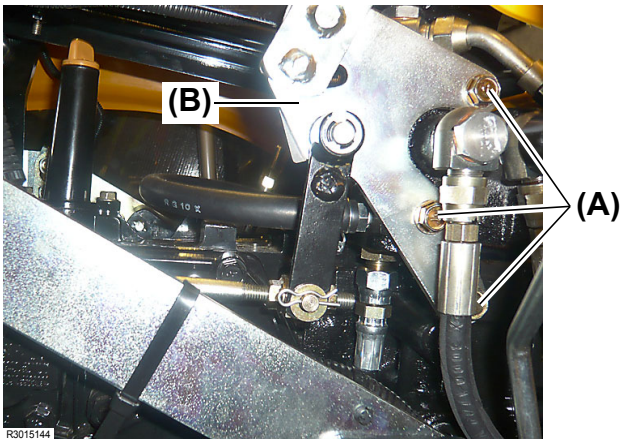

Fig. 5

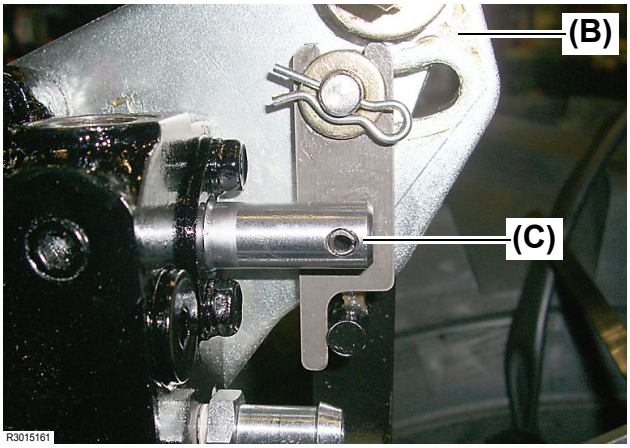

Fig. 6

(A) Bolt
(B) Link stay
(C) Valve spool

5. Remove the three (3) bolts **(Fig. 5, (A))**. Then separate the link stay **(Fig. 5, 6, (B))**.

IMPORTANT

- Separating the link stay **(Fig. 5, 6, (B))** causes the valve spool **(Fig. 6, (C))** in the link stay **(Fig. 5, 6, (B))** to fall off.
  For assembling, apply grease to the valve spool **(Fig. 6, (C))** and follow the direction shown in the photo **Fig. 6**.

■ Removing the Control Valve

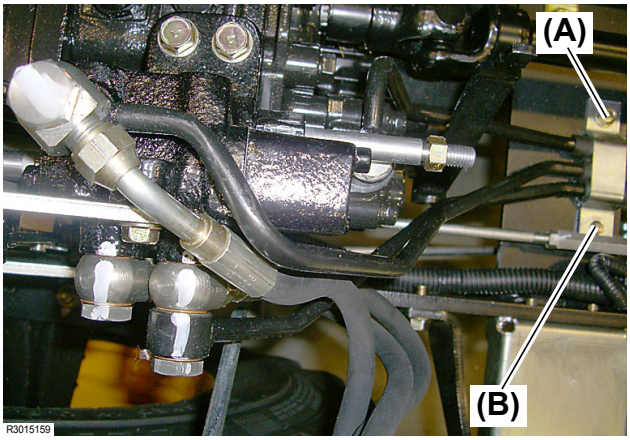

Fig. 7

(A) Bolt M8 × 16 mm (L: 0.64 in.)
(B) Pipe clamp

6. Remove the M8 × 16 mm (L: 0.64 in.) bolt **(Fig. 7, (A))** and then remove the pipe clamp **(Fig. 7, (B))**.

■ Removing the Control Valve

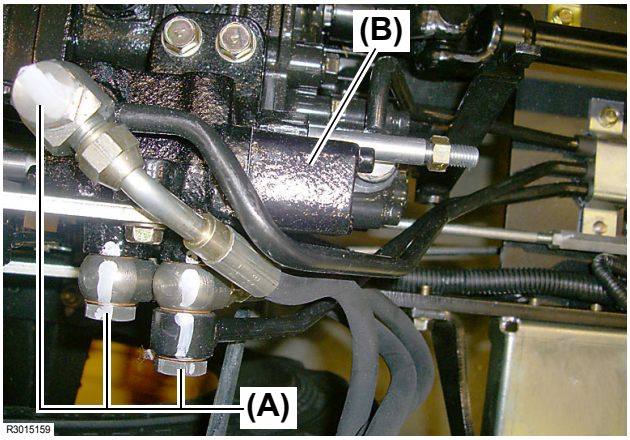

Fig. 8

(A) Pipe fittings
(B) Control valve

7. Remove the pipe fittings **(Fig. 8, (A))** and disconnect each hydraulic line having been connected to the control valve **(Fig. 8, (B))**.

IMPORTANT

●Precautions for installation can be found on pages 10-240 and 10-263.

■ Removing the Control Valve

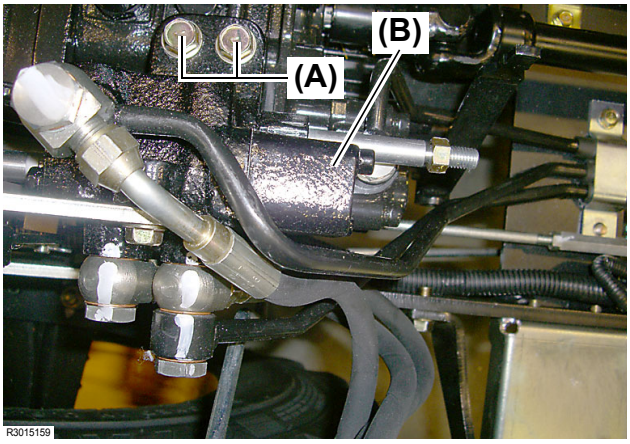

Fig. 9

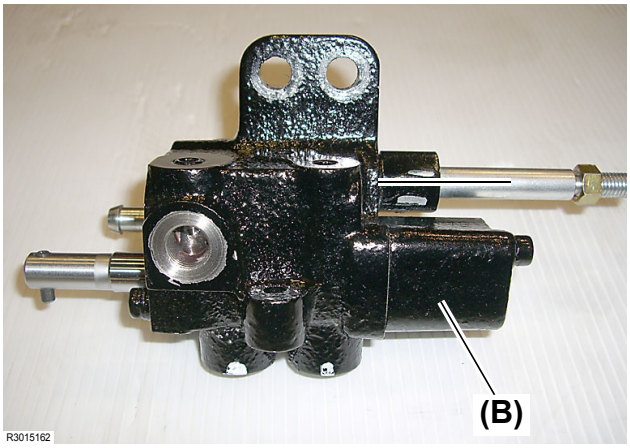

Fig. 10

(A) Bolt M10 × 25 mm (L: 1.0 in.)
(B) Control valve

8. Remove the two (2) M10 × 25 mm (L: 1.0 in.) bolts **(Fig. 9, (A))** and separate the control valve **(Fig. 9, 10, (B))** from the transmission.

49. Disassembling the Control Valve

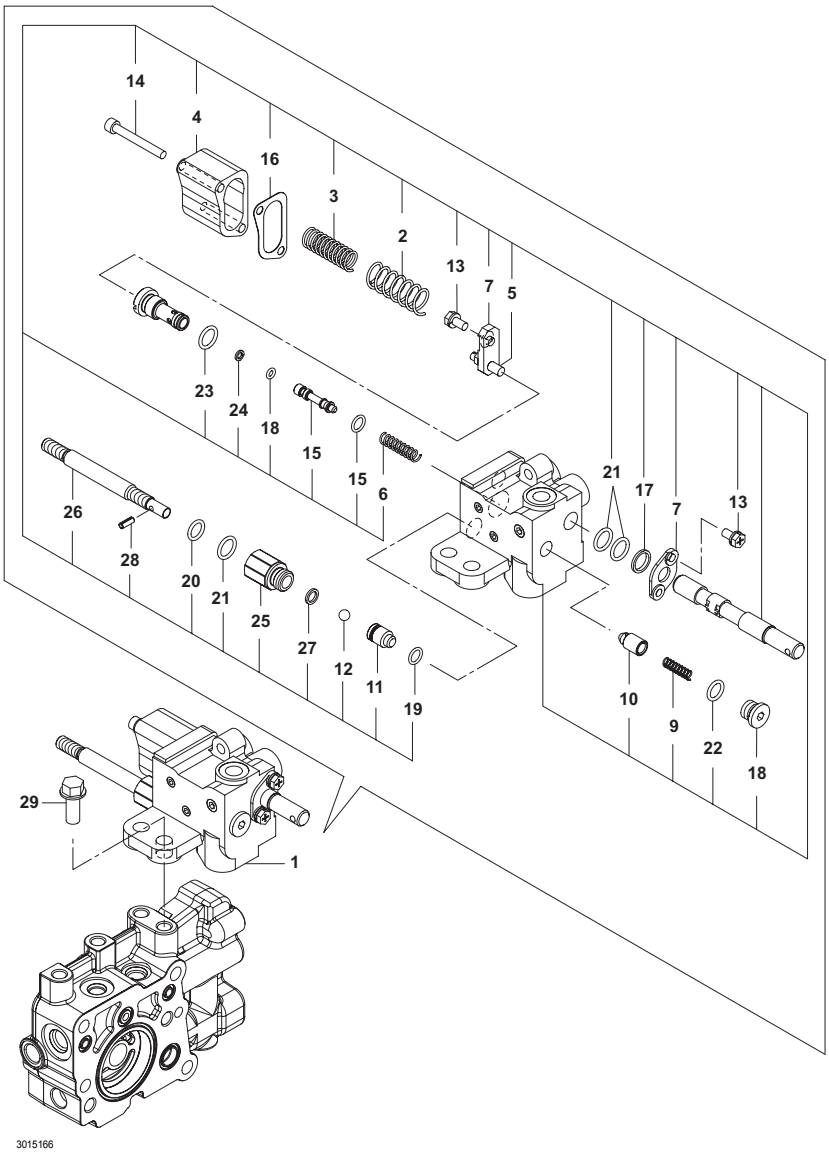

REF.	Description	Q'TY.
1	Valve ASSY, Lift	1
2	Spring, Lift Valve	1
3	Spring, Lift Valve	1
4	Cover, Lift Valve	1
5	Push Rod, Lift Valve Assy.	1
6	Spring, Valve	1
7	Plate, Lift Valve	1
8	Plug, Lift Valve	1
9	Spring, Lift Valve	1
10	Poppet, Check, Valve	1
11	Plunger, Lift Valve	1
12	Ball, 5/16	1
13	Bolt, 6 × 12 (L: 0.48 in.)	3
14	Bolt, 6 × 50 (L: 2.0 in.)	2
15	O-Ring, Lift Valve	1
16	Packing, Lift Valve	1
17	Dust Seal, Lift Valve	1
18	Packing, P 5.0	1
19	Packing, P 10.0	1
20	Packing, P 12.0	1
21	Packing, P 14.0	3
22	Packing, P 12.0	1
23	Packing, P 14.0	1
24	Ring, Backup T2 P 5	1
25	Guide, Lift Valve	1
26	Shaft, Lift Valve	1
27	Washer, Lift Valve	1
28	Pin, 4.0A × 12	1
29	Bolt, 10 × 25 (L: 1.0 in.)	2

Fig. 1

NOTE:

●Any removed O-ring, packing or gasket should be replaced with a new one.

■ Disassembling the Control Valve

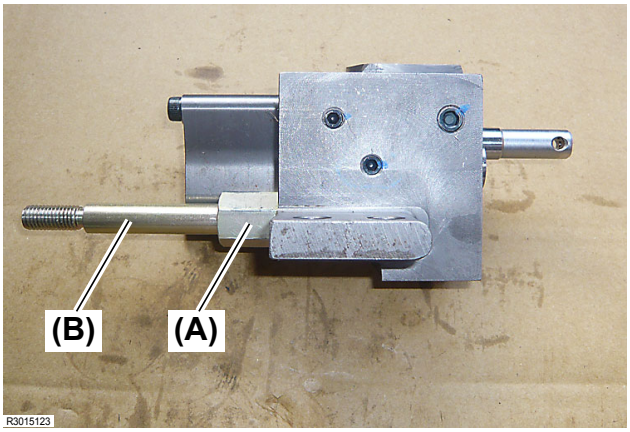

Fig. 2

(A) Shaft guide
(B) Shaft

1. Secure the control valve in a vise etc. and remove the shaft guide **(Fig. 2, (A))** together with the shaft **(Fig. 2, (B))**.
   Tightening torque for installation: 17.7 to 26.6 ft•lbs (24 to 36 N•m)

■ Disassembling the Control Valve

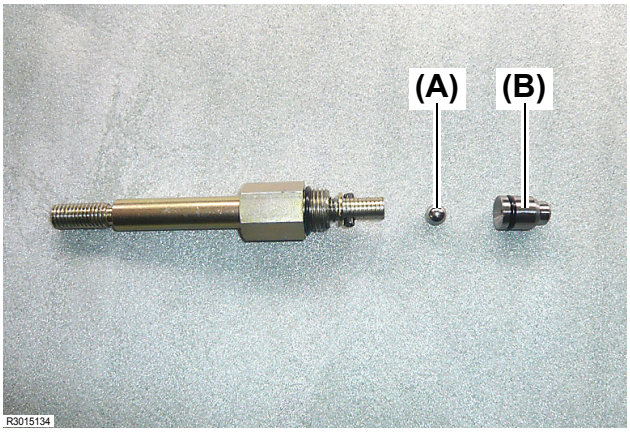

Fig. 3

(A) Steel ball
(B) Plunger valve

2. Take out the steel ball **(Fig. 3, (A))** and the plunger valve **(Fig. 3, (B))** from the inside of the control valve.

IMPORTANT

- Observe the order of installing the steel ball **(Fig. 3, (A))** and the plunger valve **(Fig. 3, (B))**. Failure to do so causes removal of the steel ball **(Fig. 3, (A))** to be impossible.

■ Disassembling the Control Valve

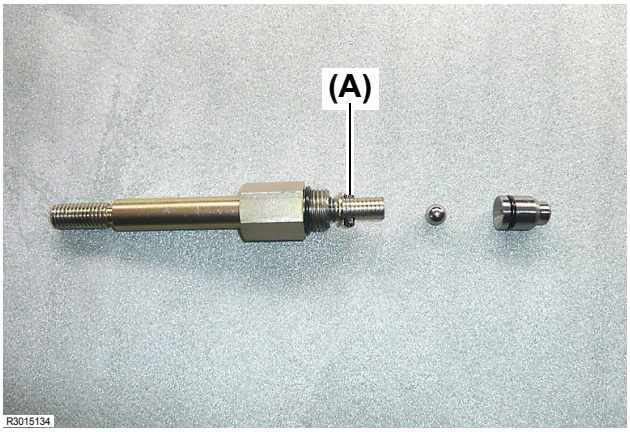

Fig. 4

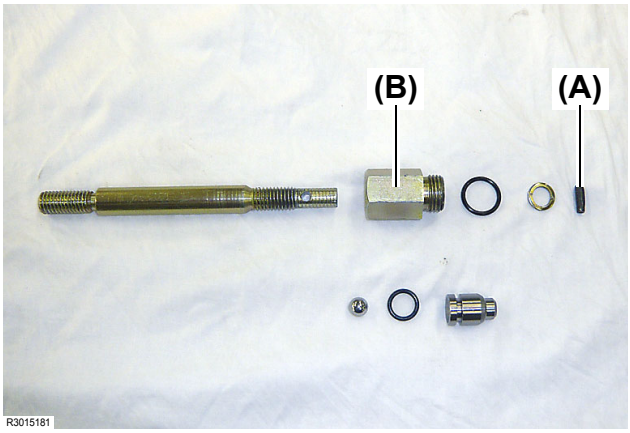

Fig. 5

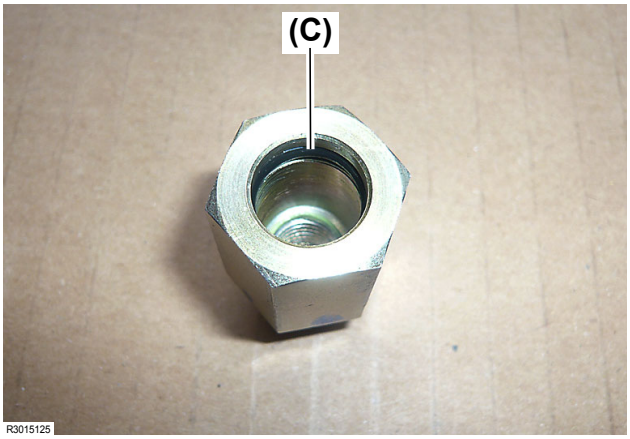

Fig. 6

(A) Roll pin
(B) Shaft guide
(C) O-ring

3. Remove the roll pin **(Fig. 4, 5, (A))** and disassemble all parts.

IMPORTANT

- There are O-rings **(Fig. 6, (C))** on the shaft guide assembly **(Fig. 5, (B))**.
- When assembling, replace all O-rings **(Fig. 6, (C))** with new ones.

■ Disassembling the Control Valve

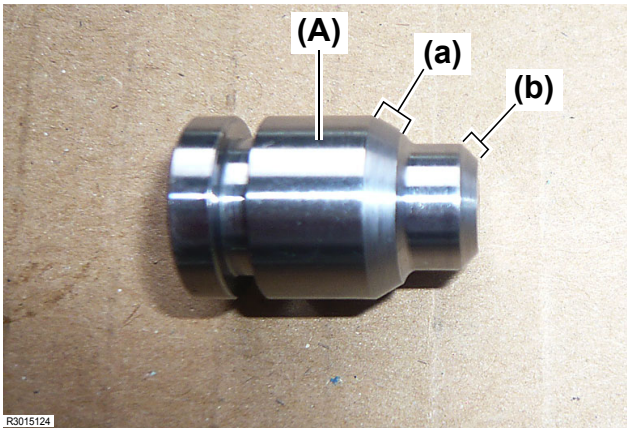

Fig. 7

(A) Plunger valve

4. The portion (a) **(Fig. 7, (a))** and (b) **(Fig. 7, (b))** of the plunger valve **(Fig. 7 (A))** are machined sealing surfaces. If the portion (a) **(Fig. 7, (a))** or (b) **(Fig. 7, (b))** is found to be damaged, replace the plunger valve **(Fig. 7 (A))** with a new one. Failure to do so causes the attachment to naturally move downward due to oil leaking past the plunger. Also inspect the bore in the control valve for any damage.

■ Disassembling the Control Valve

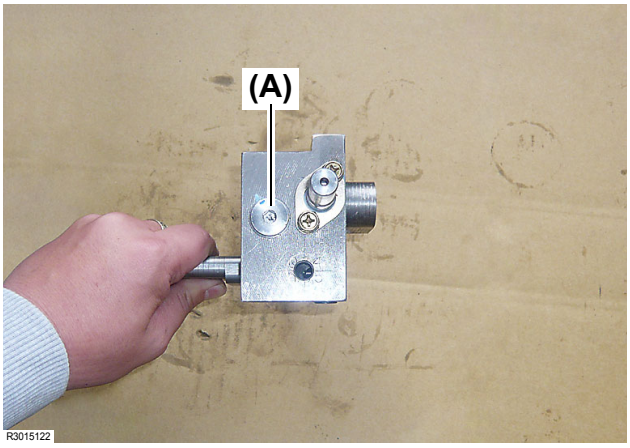

Fig. 8

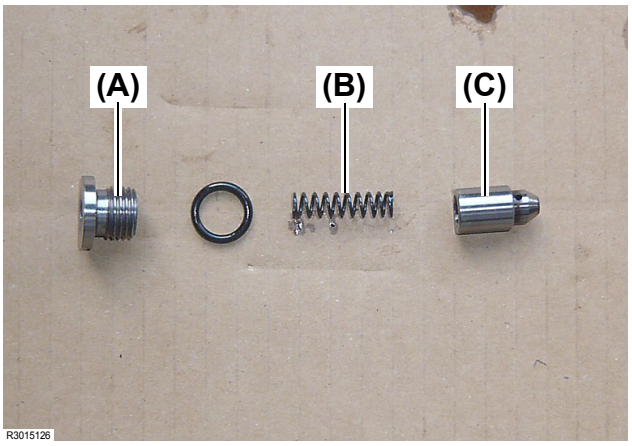

Fig. 9

(A) Plug
(B) Spring
(C) Check valve

5. Remove the plug **(Fig. 8, 9, (A))** and then take out the spring **(Fig. 9, (B))** and the check valve **(Fig. 9, (C))** from the inside.

■ Disassembling the Control Valve

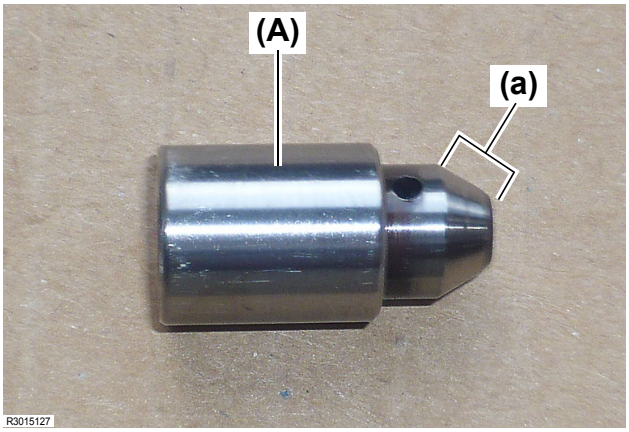

Fig. 10

(A) Check valve

6. The check valve **(Fig. 10, (A))** with damage to the portion shown in (a) **(Fig. 10, (a))** should be replaced with a new one. Failure to do so causes poor hydraulic performance.

■ Disassembling the Control Valve

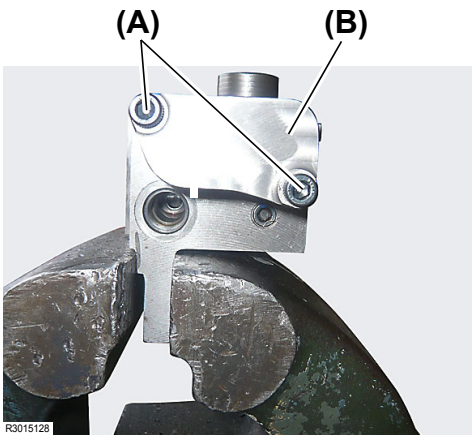

Fig. 11

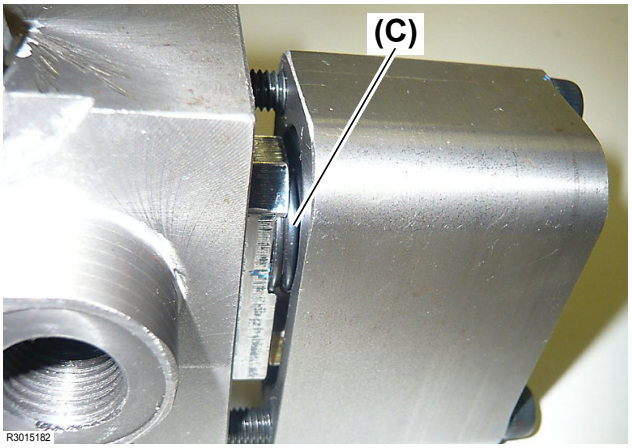

Fig. 12

(A) Bolts, M6 × 50 mm (L: 2.0 in.)
(B) Spring case
(C) Spring

7. Remove the two (2) M6 × 50 mm (L: 2.0 in.) bolts **(Fig. 11, (A))** and then remove the spring case **(Fig. 11, (B))**.

⚠ WARNING

●The spring (Fig. 12, (C)) has strong force. Therefore, wear safety goggles and gradually disassemble.

■ Disassembling the Control Valve

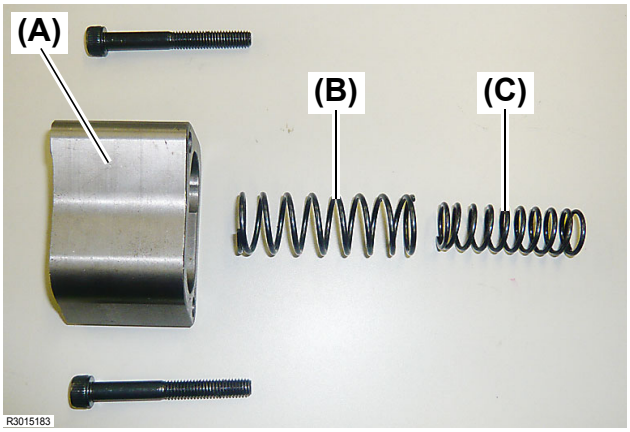

Fig. 13

(A) Spring case
(B) Spring
(C) Spring

8. There are two (2) springs **(Fig. 13, (B), (C))** in the spring case **(Fig. 13, (A))**.

■ Disassembling the Control Valve

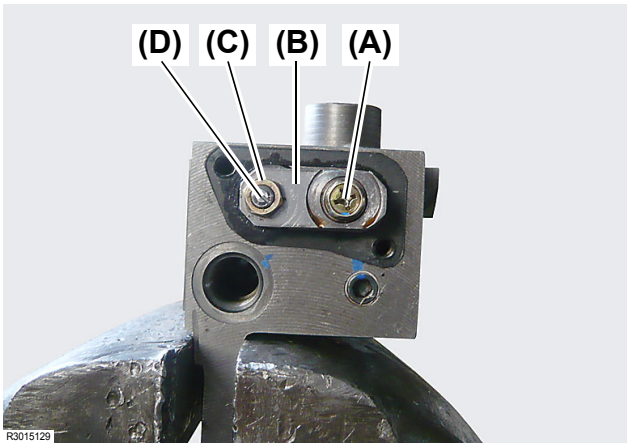

Fig. 14

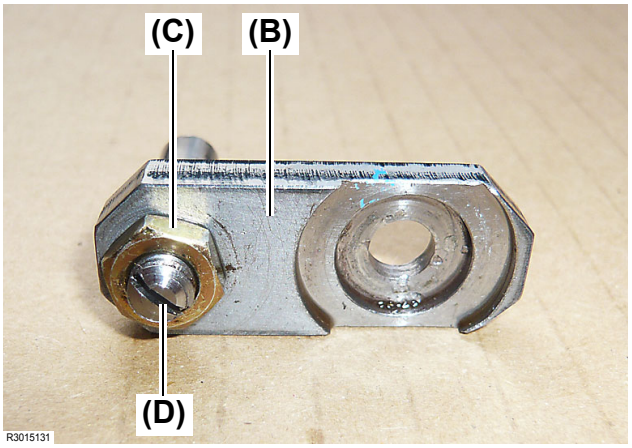

Fig. 15

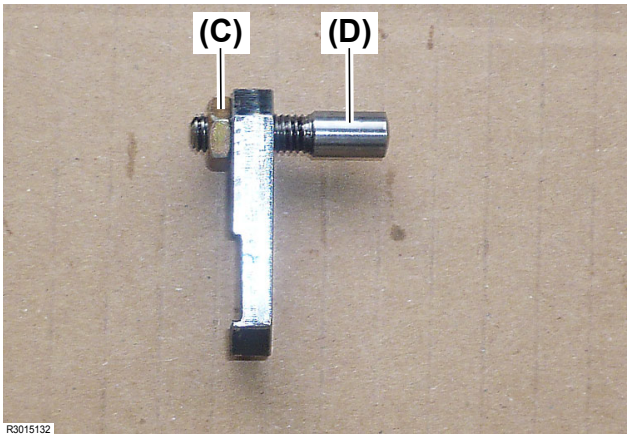

Fig. 16

(A) Bolt, M6 × 12 mm (L: 0.48 in.)
(B) Plate
(C) Nut
(D) Screw

9. Remove the M6 × 12 mm (L: 0.48 in.) bolt **(Fig. 14 (A))** and then remove the plate assembly.

IMPORTANT

- Do not disassemble the nut **(Fig. 14, 15, 16, (C))** and the screw **(Fig. 14, 15, 16, (D))**. These have been factory adjusted.

■ Disassembling the Control Valve

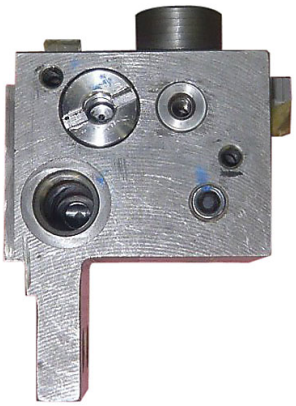

R3015186

Fig. 17

10.Peel off the packing on the mating surface of the spring case and control valve.

■ Disassembling the Control Valve

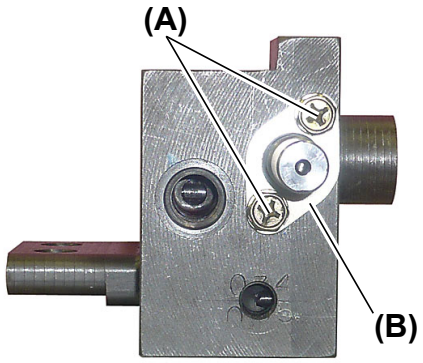

R3015184

Fig. 18

(A) Bolt M6 × 12 mm (L: 0.48 in.)
(B) Plate

11.Remove the two (2) M6 × 12 mm (L: 0.48 in.) bolts **(Fig. 18, (A))** and the plate **(Fig. 18, (B))**.

■ Disassembling the Control Valve

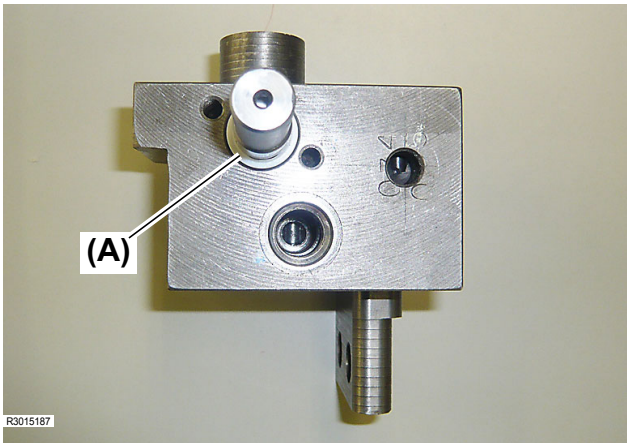

Fig. 19

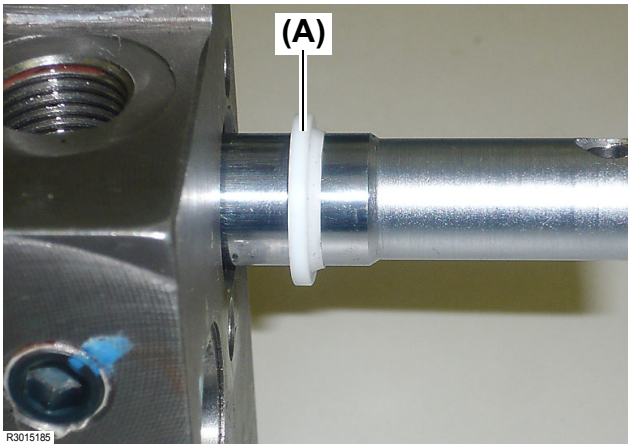

Fig. 20

(A) Dust seal

12.Remove the dust seal (white) **(Fig. 19, 20, (A))**.

IMPORTANT

- The dust seal **(Fig. 19, 20, (A))** has a predetermined direction for installation. Therefore, install the dust seal **(Fig. 20, (A))** according to the photo **Fig. 20**.

■ Disassembling the Control Valve

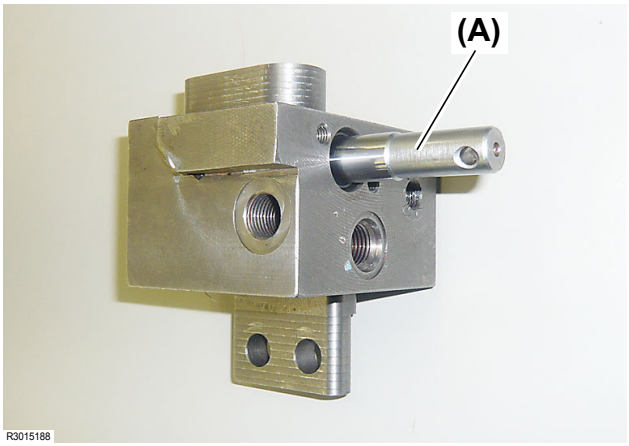

Fig. 21

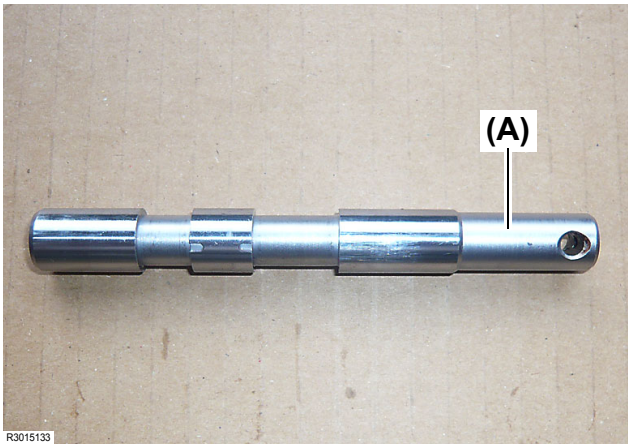

Fig. 22

(A) Main spool

13.Pull out the main spool **(Fig. 21, (A))**.

NOTE:

●The main spool **(Fig. 22, (A))** is not supplied as a service part.

■ Disassembling the Control Valve

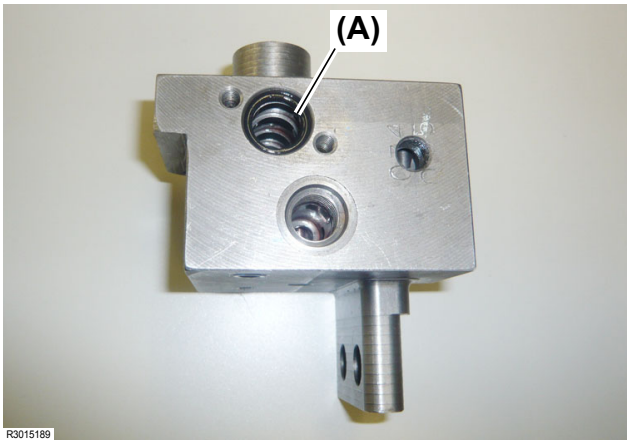

Fig. 23

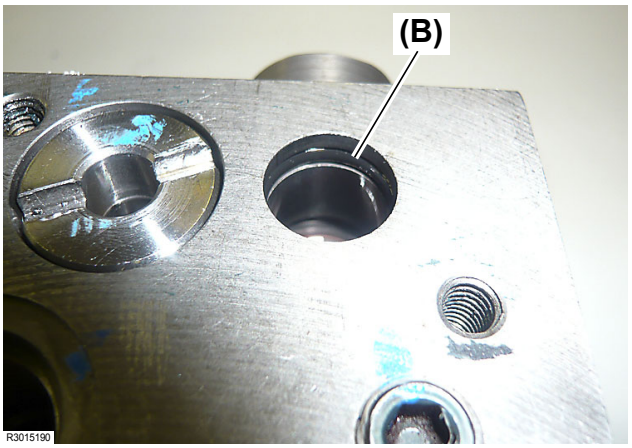

Fig. 24

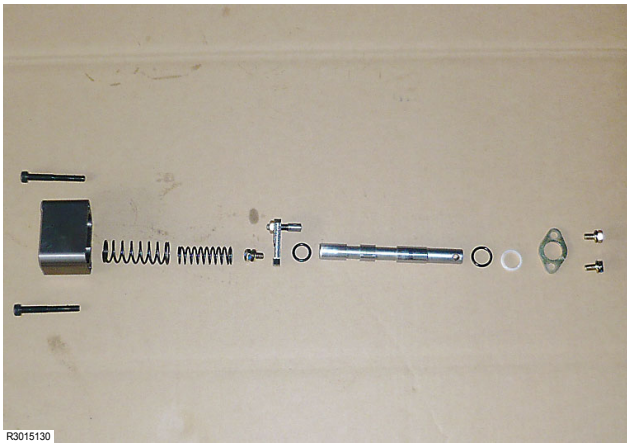

Fig. 25

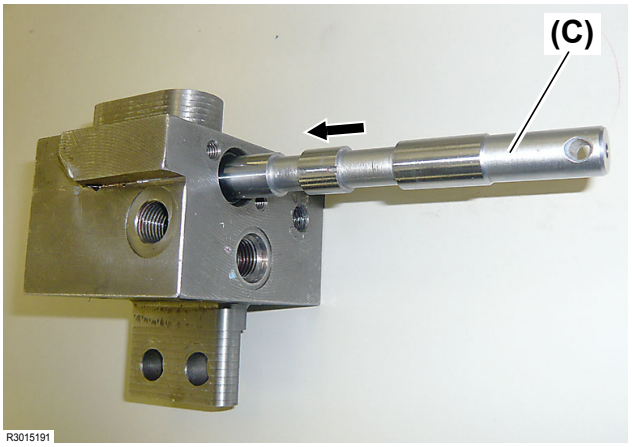

Fig. 26

(A) O-ring
(B) O-ring
(C) Main spool

14.Remove the two (2) O-rings **(Fig. 23, (A))** and **(Fig. 24, (B))** from the control valve.
* Photo **(Fig. 25)** shows the status after separation.

IMPORTANT

●Make sure to assemble from the arrow direction shown in the photo **(Fig. 26)**. Failure to do so makes the step of the main spool **(Fig. 26, (C))** damage the O-ring (14-B) inside the control valve, resulting in oil leakage.

■ Disassembling the Control Valve

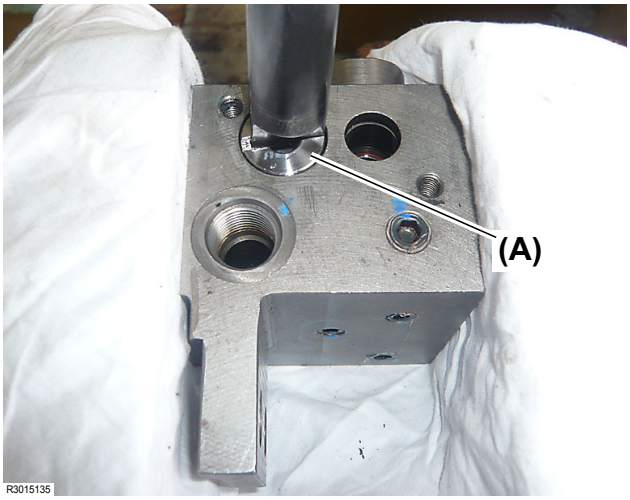

Fig. 27

(A) Mechanical check valve sleeve

15.Remove the mechanical check valve sleeve **(Fig. 27, (A))**.
Tightening torque for installation: 11.8 to 17.7 ft•lbs (16 to 24 N•m)

⚠ CAUTION

- **Securely fix the control valve body and press down the tool against the mechanical check valve sleeve to remove.**
- **Be careful not to be injured by tool slippage.**

NOTE:

- Dimensions of the tool are as follows:
  Thickness: 0.1 to 0.12 in. (2.5 to 3.0 mm)
  Width: 0.72 to 0.8 in. (18 to 20 mm)

■ Disassembling the Control Valve

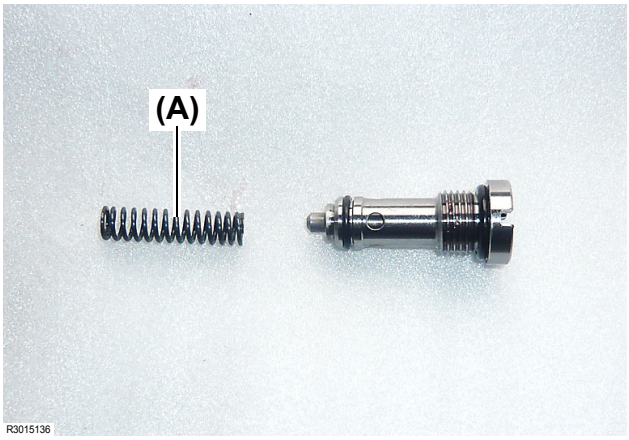

Fig. 28

(A) Spring

16. Take out the spring **(Fig. 28, (A))** from the inside of the control valve.

■ Disassembling the Control Valve

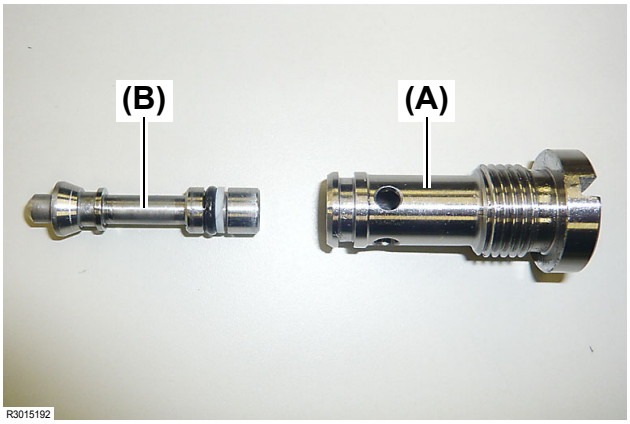

Fig. 29

(A) Mechanical check valve sleeve
(B) Mechanical check valve

17. Take out the mechanical check valve **(Fig. 29, (B))** from the mechanical check valve sleeve **(Fig. 29, (A))**.

NOTE:

- The mechanical check valve sleeve and the mechanical check valve are not supplied as a service part.

■ Disassembling the Control Valve

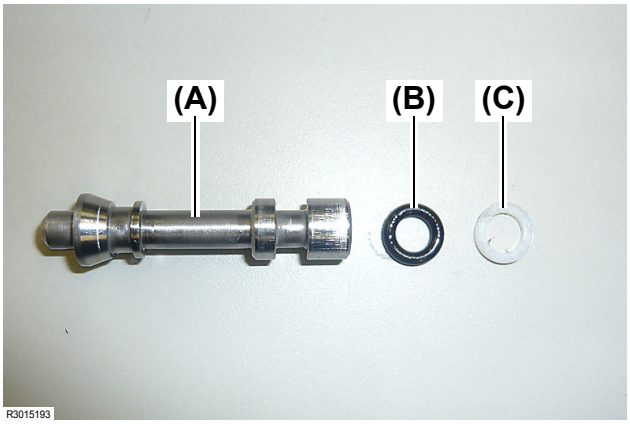

Fig. 30

(A) Mechanical check valve
(B) O-ring
(C) Backup ring

18. Remove the O-ring **(Fig. 30, (B))** and the backup ring **(Fig. 30, (C))** from the mechanical check valve **(Fig. 30, (A))**.

NOTE:

● The O-ring and the backup ring are supplied as a service part.

■ Disassembling the Control Valve

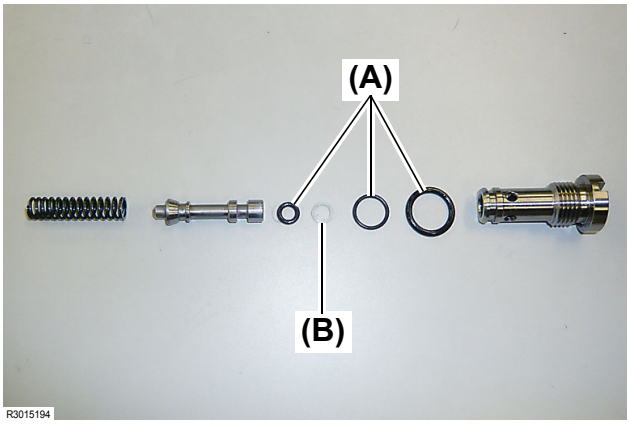

Fig. 31

(A) O-ring
(B) Backup ring

IMPORTANT

●For assembling, replace the O-rings **(Fig. 31, (A))** and the backup ring **(Fig. 31, (B))** with new ones.

■ Disassembling the Control Valve

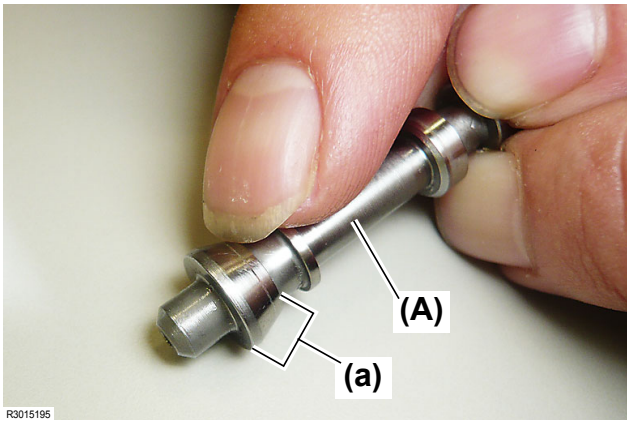

Fig. 32

(A) Mechanical check valve

19. The mechanical check valve **(Fig. 32, (A))** with damage to the portion shown in (a) **(Fig. 32, (a))** should be replaced with a new one.

NOTE:

- If you feel any engagement when scratching the portion shown (a) with your fingernail nail, it is the time for the mechanical check valve to be replaced with a new one.
- To such an extent that a line as shown in the photo **(Fig. 32)** is seen, there is no problem.

50. Removing the Rear Frame

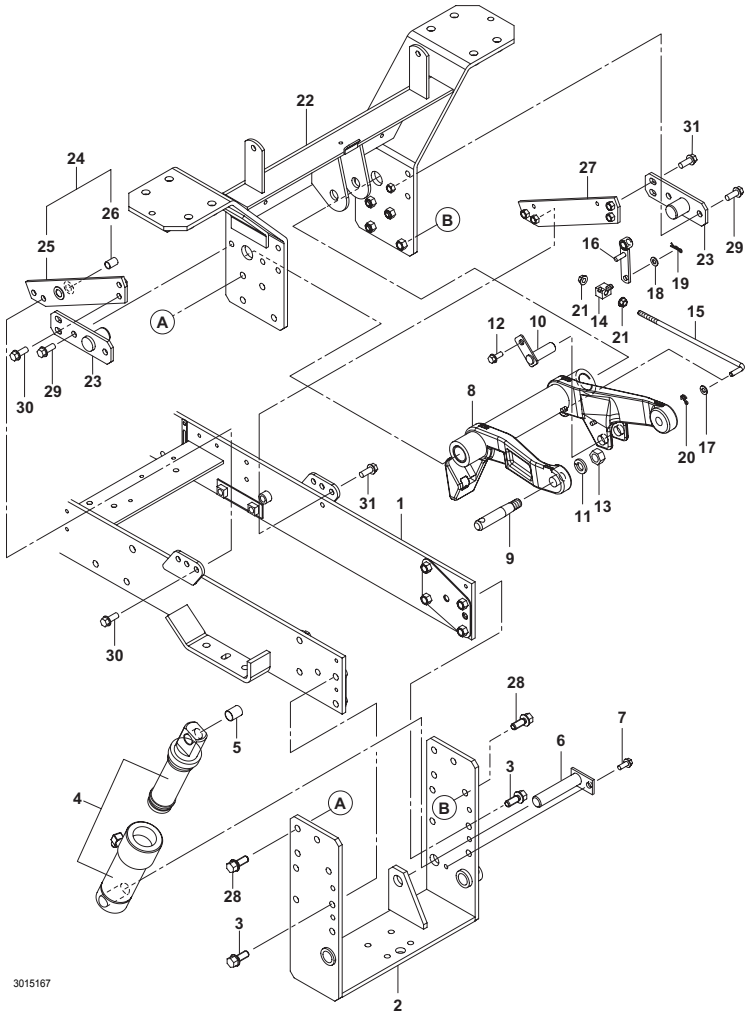

Fig. 1

REF.	Description	Q'TY.
1	SCT Frame M ASSY.	1
2	Frame, Lower	1
3	Bolt, M12 × 30 (L: 1.2 in.)	8
4	Cylinder ASSY, HYD.	1
5	Bearing, 18 × 25	1
6	Pin (Cylinder)	1
7	Bolt, 8 × 20 (L: 0.8 in.)	1
8	Lift Arm KIT	1
9	Pin, Lift Arm	2
10	Pin (Lift Arm)	1
11	Washer, 16	2
12	Bolt, 8 × 20 (L: 0.8 in.)	1
13	Nut, 16	2
14	Adjuster	1
15	Rod, Feedback	1
16	Lever ASSY., Control	1

REF.	Description	Q'TY.
17	Washer, 8	1
18	Washer, 8	1
19	Pin, 8	1
20	Pin, 2.0 × 16	1
21	Nut, 8	2
22	Rear Frame Upper	1
23	Plate, Side	2
24	Frame L, Joint ASSY.	1
25	Frame L, Joint	1
26	Bearing, 12 × 20	1
27	Frame R, Joint	1
28	Bolt, M12 × 30 (L: 1.2 in.)	8
29	Bolt, 10 × 25 (L: 1.0 in.)	4
30	Bolt, 10 × 25 (L: 1.0 in.)	4
31	Bolt, 10 × 25 (L: 1.0 in.)	4

■ Removing the Rear Frame

NOTE:

●Removal of the rear frame should be carried out after execution of the following items:

3. 3-Point Hitch Separation (on page 10-8)
5. Turn Signal / Flasher Removal (on page 10-29)
6. Roll-Over Protective Structure (ROPS) Upper (on page 10-33)
7. Safety belt / Seat (on page 10-36)
8. Seat Stay (on page 10-39)
11. Fender Removal Preparation (on page 10-51)
13. Rear Tire (on page 10-64)
42. Power Take Off (PTO) Safety Cover (on page 10-238)

■ Removing the Rear Frame

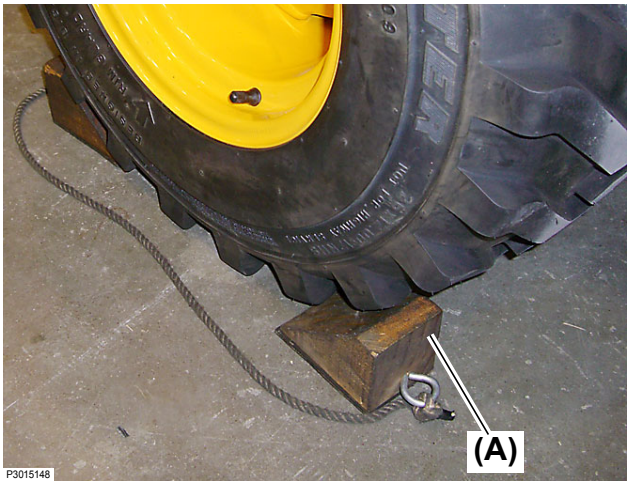

Fig. 2



Fig. 3

(A) Wheel chock

⚠ WARNING

- **Before working, ensure that the front wheel chock (Fig. 2, (A)) and the main frame jack stands have been securely set.**

■ Removing the Rear Frame

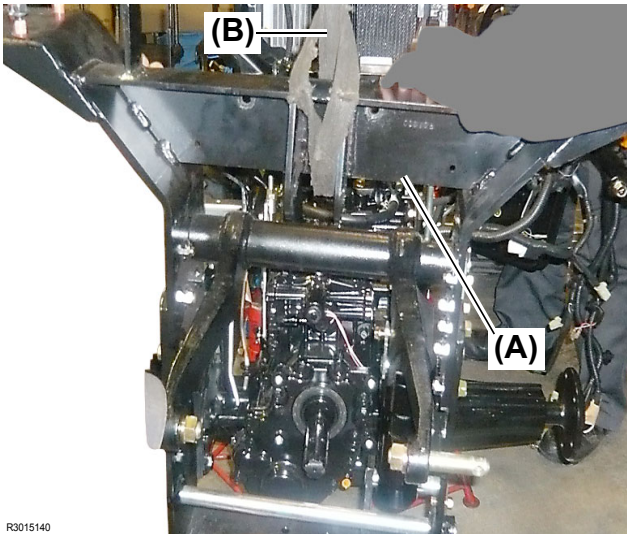

Fig. 4

(A) Rear frame upper
(B) Sling

1. Set a sling secured to a crane **(Fig. 4, (B))** at the center of the rear frame upper **(Fig. 4, (A))** and lightly lift up so as to prevent the rear frame upper **(Fig. 4, (A))** from falling.

■ Removing the Rear Frame

2. Place an oil drain pan under the control valve so as to receive oil.

■ Removing the Rear Frame

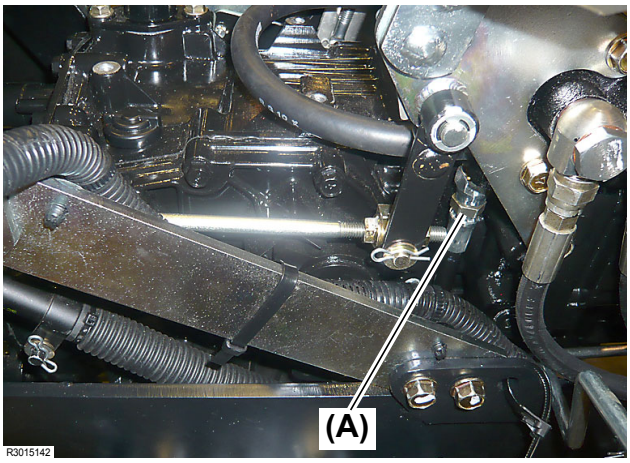

Fig. 5

(A) Hydraulic hose

3. Disconnect the hydraulic hose **(Fig. 5, (A))** connected to the lift cylinder, at the bottom of the control valve. Tightening torque for installation: 16.7 to 20.3 ft•lbs (22.6 to 27.5 N•m)

■ Removing the Rear Frame

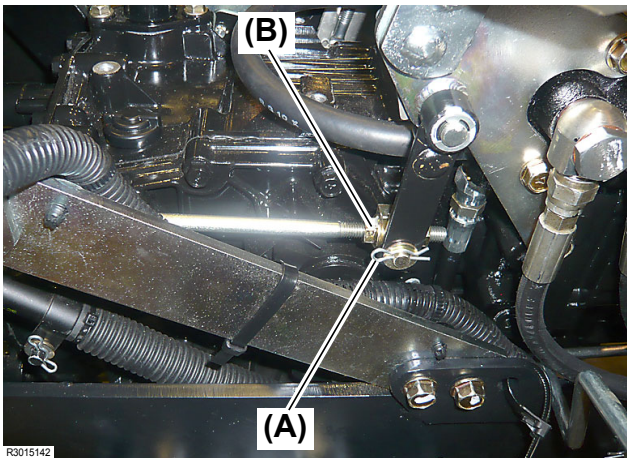

Fig. 6

(A) Snap pin
(B) Feed back rod

4. Remove the snap pin **(Fig. 6, (A))** and the washer. Then remove the feed back rod **(Fig. 6, (B))** connected to the lift arm.

■ Removing the Rear Frame

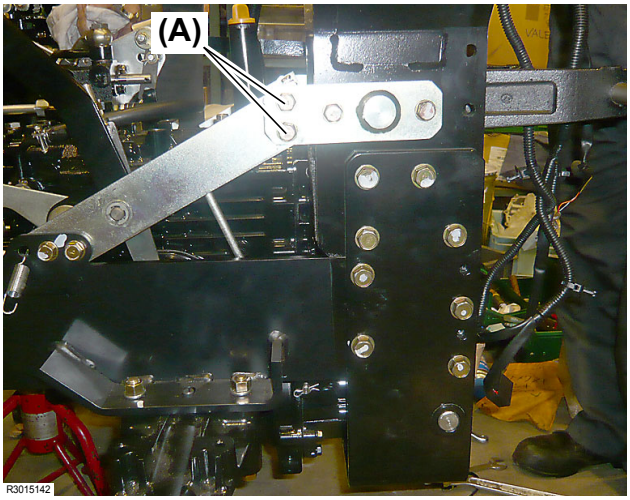

Fig. 7

(A) M10 × 25 mm bolts (L: 1.0 in.)

5. Remove the two (2) M10 × 25 mm (L: 1.0 in.) bolts **(Fig. 7, (A))** on each of the right and left sides. Tightening torque for installation: 32.5 to 43.5 ft•lbs (44 to 59 N•m)

■ Removing the Rear Frame

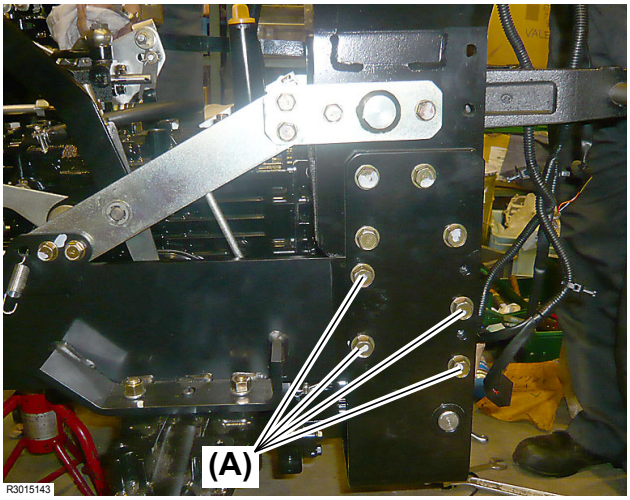

Fig. 8

(A) Bolt M12 × 30 mm (L: 1.2 in.)

6. Remove the four (4) M12 × 30 mm (L: 1.2 in.) bolts **(Fig. 8, (A))** on each of the right and left sides. Tightening torque for installation: 79.7 to 93.7 ft•lbs (108 to 127 N•m)

■ Removing the Rear Frame

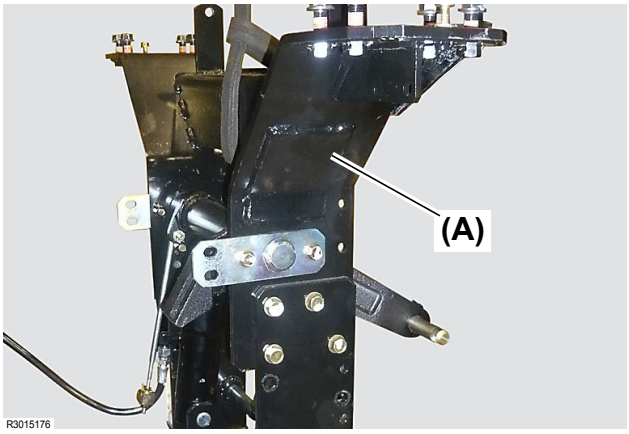

Fig. 9

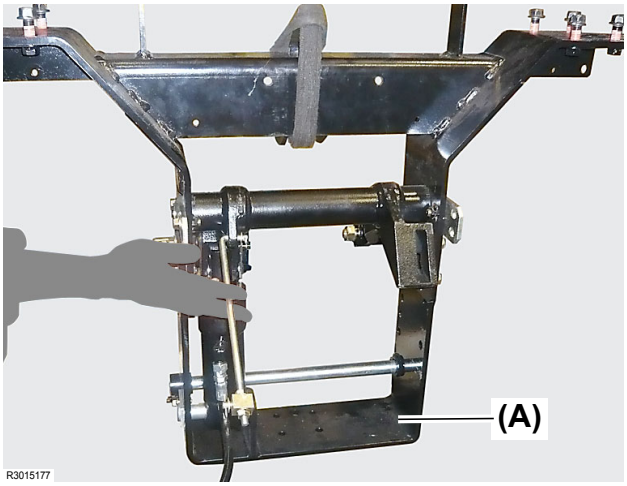

Fig. 10

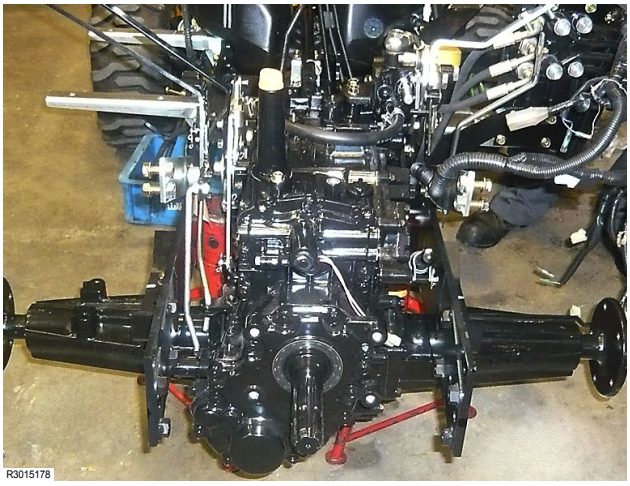

Fig. 11

(A) Rear frame

7. Gradually separate the rear frame **(Fig. 9, 10, (A))**.

⚠ CAUTION

●Ensure that this work should be carried out by two (2) persons.

* Photo **(Fig. 11)** shows the status after the rear frame is removed.

■ Removing the Rear Frame

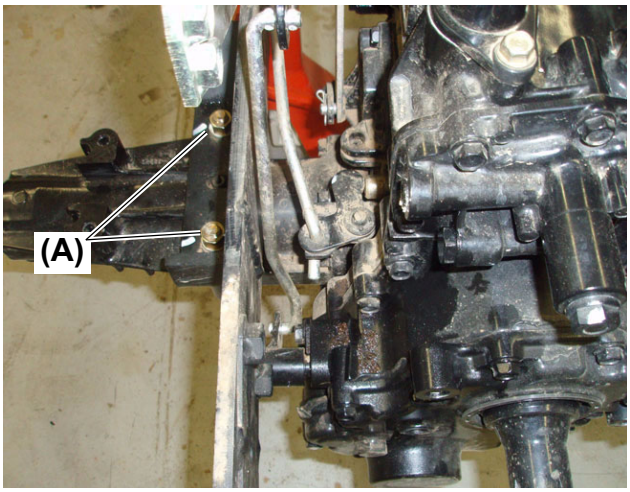

Fig. 12

(A) Bolts

8. Once the rear frame has been removed from the tractor, the main frame can easily be separated from the transaxle. Remove the four (4) bolts **(Fig. 12, (A))**, nuts and lock washers that secure the main frame to the axle housings. When removing the bolts, note the location of the two (2) locating pins. Then, the main frame can be lifted away from the transaxle.

NOTE:

●For installation, the torque of the nuts and bolts are 58 to 72 ft•lbs (78.4 to 98 N•m).

51. Foot Brake Pedal Disassembly

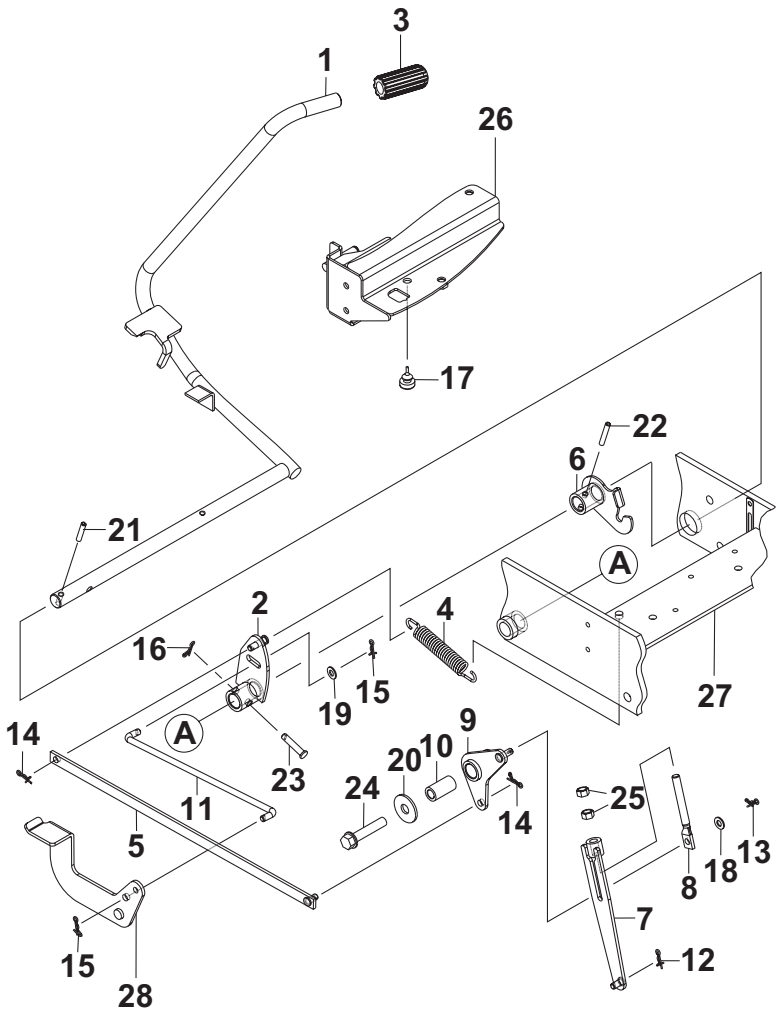

Fig. 1

REF.	Description	Q'TY.
1	Pedal, Brake	1
2	Arm, Brake	1
3	Head, Brake Pedal	1
4	Spring, Return	1
5	Rod, Brake	1
6	Arm, Release	1
7	Rod, Push	1
8	Screw, Adjust	1
9	Arm, Brake Rear	1
10	Collar	1
11	Link Rod, DIFF.	1
12	Pin, Snap	1
13	Pin, Snap	1
14	Pin, Snap	2

REF.	Description	Q'TY.
15	Pin, Snap	2
16	Pin, Snap	1
17	Stopper, Pedal	1
18	Washer, 8	1
19	Washer, 8	1
20	Washer, 12	1
21	Pin, 6.0A × 32 (L: 1.28 in.)	1
22	Pin, 6.0A × 40 (L: 1.6 in.)	1
23	Pin, 8 × 40 (L: 1.6 in.)	1
24	Bolt, 12 × 60 (L: 2.4 in.)	1
25	Nut, 10	2
26	Stay RF, Step	1
27	SCT Frame M ASSY.	1
28	Pedal, DIFF.	1

■ Foot Brake Pedal Disassembly

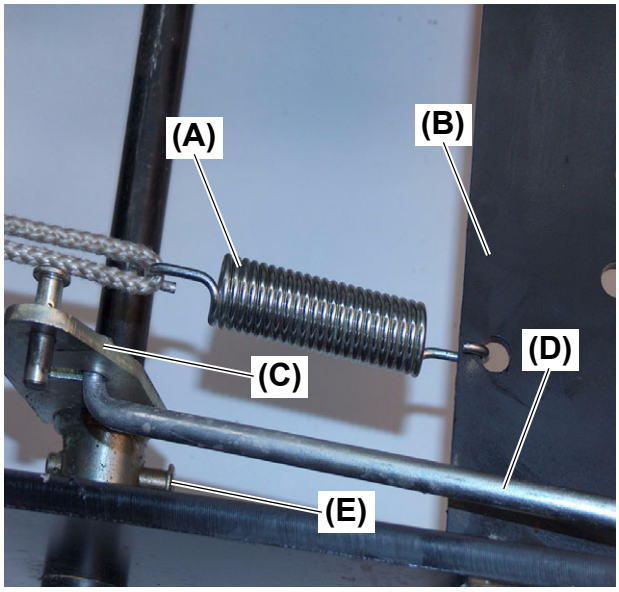

Fig. 2

(A) Brake return spring
(B) Cross brace of the frame
(C) Brake arm
(D) Differential lock rod
(E) Clevis pin

1. Disconnect the brake return spring **(Fig. 2, (A))** connected to the cross brace of the frame **(Fig. 2, (B))** and the brake arm **(Fig. 2, (C))** using a piece of rope or spring puller for removal.

2. Disconnect the differential lock rod **(Fig. 2, (D))** from the brake arm by removing the snap pin and washer.

3. Lock the brake pedal parking brake.

4. Remove the roll pin from the brake pedal located outside the left frame rail.

5. Remove the snap pin from the clevis pin **(Fig. 2, (E))** that secures the brake arm **(Fig. 2, (C))** to the brake pedal.

■ Foot Brake Pedal Disassembly

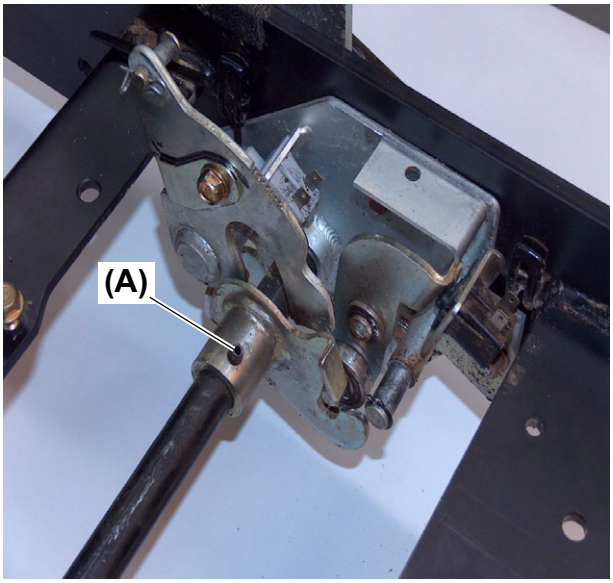

Fig. 3

(A) Roll pin

6. Remove the roll pin **(Fig. 3, (A))** from the cruise release arm using a punch and hammer.

■ Foot Brake Pedal Disassembly

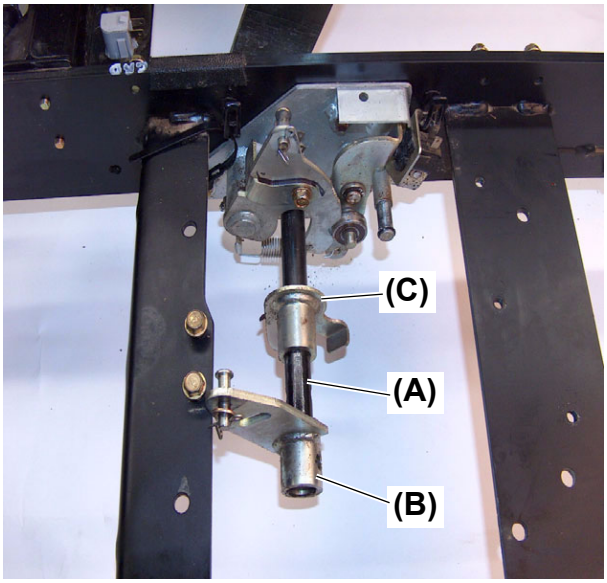

Fig. 4

(A) brake pedal
(B) brake arm
(C) cruise release

7. Remove the brake pedal **(Fig. 4, (A))** by sliding it out toward the right side through the pedal fulcrum and frame. Remove the brake arm **(Fig. 4, (B))** and cruise release **(Fig. 4, (C))** from the brake pedal **(Fig. 4, (A))** by pulling them out toward the left side of the unit.

■ Foot Brake Pedal Disassembly

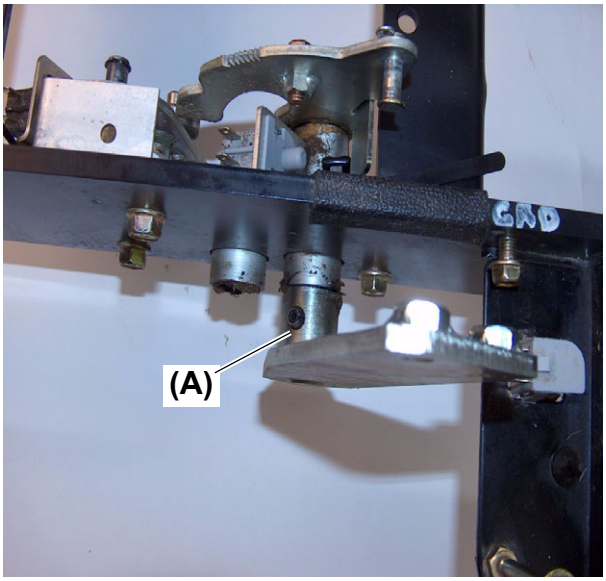

Fig. 5

(A) Reverse bracket

8. Remove the two (2) roll pins (one inside the other) from the forward / reverse bracket **(Fig. 5, (A))** using a hammer and punch.

■ Foot Brake Pedal Disassembly

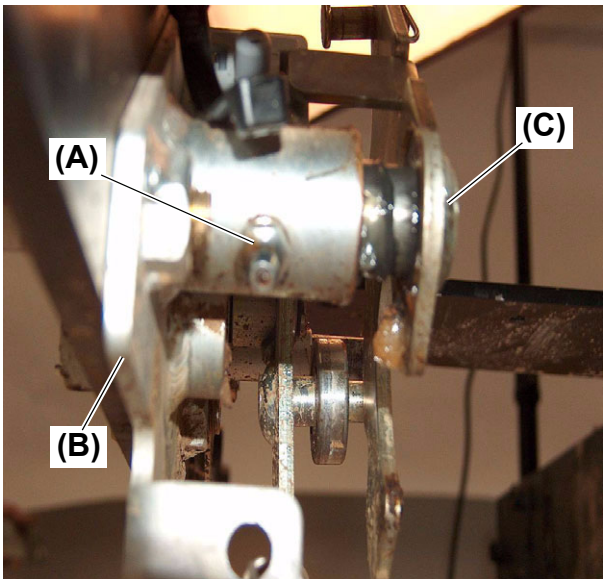

Fig. 6

(A) Grease fitting
(B) Pedal fulcrum
(C) Hydro Static Transmission (HST) arm

9. Loosen the grease fitting **(Fig. 6, (A))** from the pedal fulcrum **(Fig. 6, (B))**.

NOTE:

- The grease fitting does not need to be removed to extract the Hydro Static Transmission (HST) arm from the pedal fulcrum. Remove the Hydro Static Transmission (HST) arm **(Fig. 6, (C))**.

■ Foot Brake Pedal Disassembly

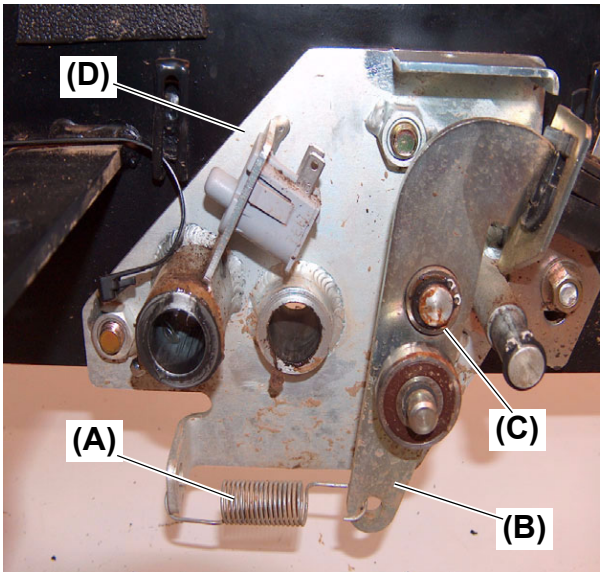

Fig. 7

(A) Switch arm extension spring
(B) Switch arm
(C) External snap ring
(D) Pedal fulcrum

10. Remove the switch arm extension spring **(Fig. 7, (A))**, from the switch arm **(Fig. 7, (B))**.

11. Remove the external snap ring **(Fig. 7, (C))**, securing the switch arm **(Fig. 7, (B))** to the pedal fulcrum **(Fig. 7, (D))**.

■ Foot Brake Pedal Disassembly

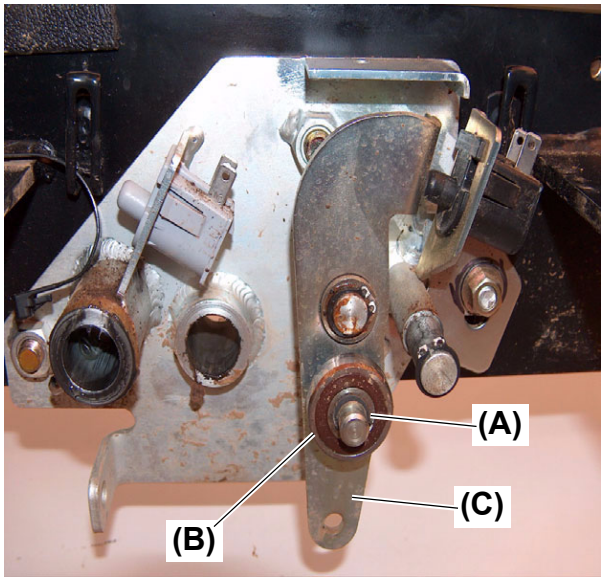

Fig. 8

(A) External snap ring
(B) Bearing
(C) Switch arm

12. Remove the external snap ring **(Fig. 8, (A))** that secures the bearing **(Fig. 8, (B))** to the switch arm **(Fig. 8, (C))**.

■ Foot Brake Pedal Disassembly

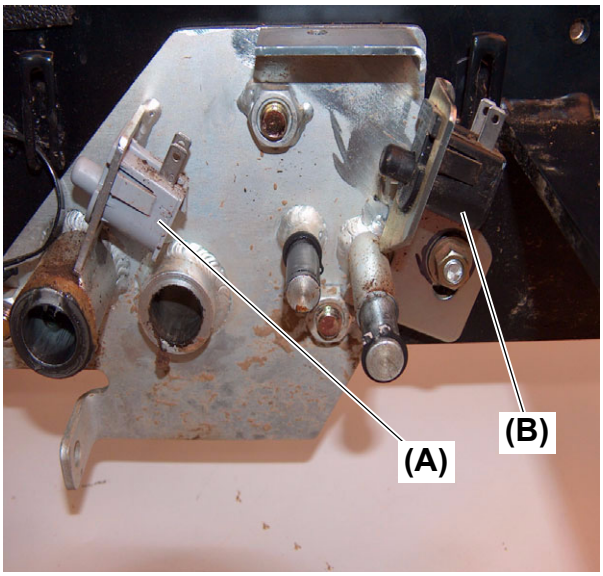

Fig. 9

(A) Reverse switch
(B) Neutral switch

13.Remove the reverse switch (gray) **(Fig. 9, (A))**, from the pedal fulcrum.

14.Remove the neutral switch (black) **(Fig. 9, (B))**, from the switch bracket.

■ Foot Brake Pedal Disassembly

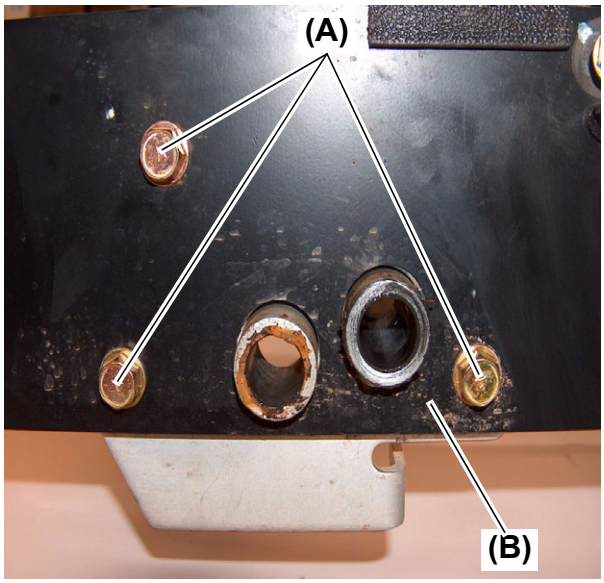

Fig. 10

(A) M10 × 25 mm (L: 1 in.) bolts
(B) Right side of the frame

15. Remove the three (3) M10 × 25 mm (L: 1 in.) bolts **(Fig. 10, (A))** that secure the pedal fulcrum to the right side of the frame **(Fig. 10, (B))**.

■ Foot Brake Pedal Disassembly

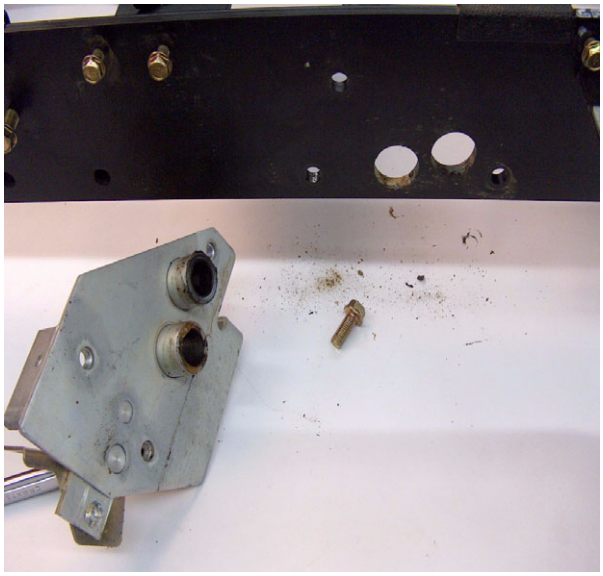

Fig. 11

16.Remove the pedal fulcrum from the frame of the tractor **(Fig. 11)**.

52. Tips: Reassembly Procedure

52-1 Transmission Installation

1. Support the transmission with a jack stand front and back.

■ Tips: Reassembly Procedure

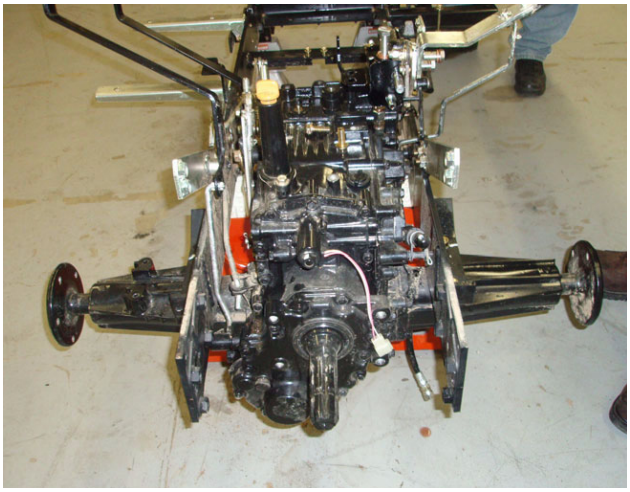

Fig. 1

2. With the help of an additional technician, walk the frame assembly onto the transmission assembly. If the frame is assembled, walk the transmission into the frame either with the wheels installed or with the transmission supported on a floor jack.

NOTE:

●Any of the above procedures are best completed with the help of an additional technician.

■ Tips: Reassembly Procedure

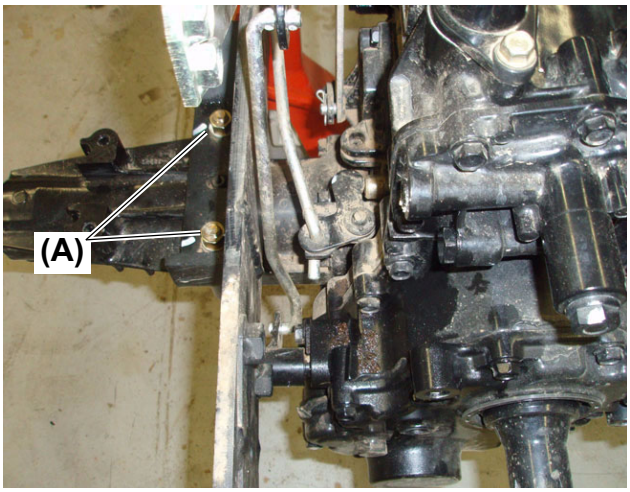

Fig. 2

(A) Bolts

3. Install the four (4) bolts **(Fig. 2, (A))**, nuts and lock washers that secure the main frame to the axle housings. Make sure the two (2) locating pins are in the correct hole in the main frame rail plate. Torque the Nuts and Bolts to 58 to 72 ft•lbs (78.4 to 98 N•m).

■ Tips: Reassembly Procedure

4. Install and connect brake linkage.

■ Tips: Reassembly Procedure

5. Install the lower frame and upper frame as an assembly to the main frame.
   Torque the eight (8) bolts four (4) per side to 80 to 94 ft•lbs. (108 to 127 N•m).

NOTE:

●This is best completed with the help of an additional technician.

■ Tips: Reassembly Procedure

6. Install the rear wheel assemblies. The valve stem goes to the outside when mounting the rear wheels. Torque the Wheel Studs to 52 to 59 ft•lbs (70 to 80 N•m).

■ Tips: Reassembly Procedure

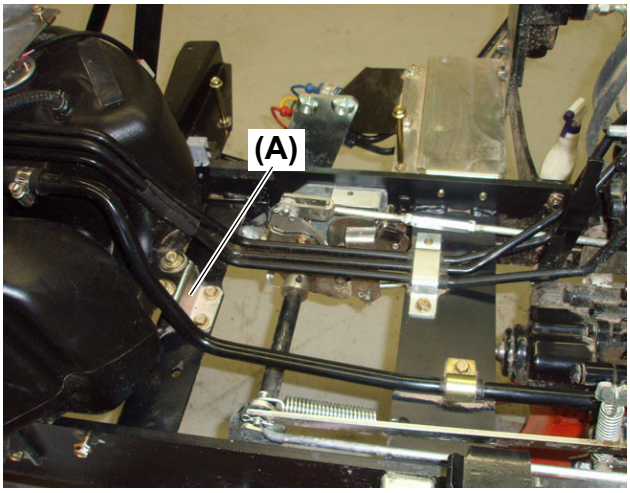

Fig. 3

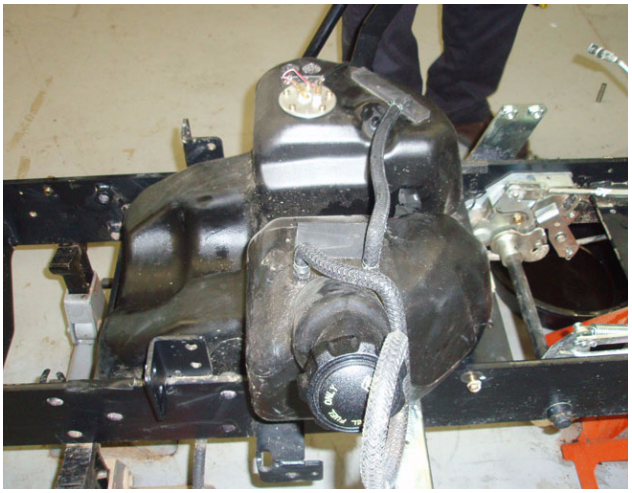

Fig. 4

(A) Fuel tank stay

7. Install the fuel tank. Make sure the fuel tank cushion pieces are in place. Install the fuel tank into the main frame between the left and right frame rails. Align between the only vertical cross brace and the smaller horizontal cross brace of the main frame. Install the fuel tank stay **(Fig. 3, (A))** to secure the fuel tank to the main frame.

NOTE:

●Make sure the Fuel Line from the bottom of the tank is positioned between the Fuel Tank and Main Frame.

■ Tips: Reassembly Procedure

8. Install the column bracket. The column bracket bolts to the main frame using four (4) bolts and two (2) weldment nut plates. Install the column bracket to the two (2) vertical brackets on the outside of the main frame rails. Install the bolts from the front side of the main frame brackets and the weldment nut plates on the column bracket side.
   Torque the four (4) bolts to standard torque per bolt size and length.

NOTE:

●Make sure all the Fuel Tank Cushion pieces are in place on top of the Fuel Tank.

■ Tips: Reassembly Procedure

9. Install engine. The engine can be installed and removed with the radiator as an assembly. When installing the engine / radiator assembly, pay close attention to the radiator, fan, hoses and driveshaft. Lower the engine / radiator down until the pins align into the radiator rubber cushions located in the column bracket. Lower the engine till the frame mount stay's rest on the main frame rails.

52-2 Procedure for Priming the Hydraulic System

1. Start the tractor and run at low idle for 40 seconds.

2. Run at full throttle for 40 seconds.

3. Run at low idle and engage forward pedal then reverse pedal.

4. Continue stroking the forward and reverse pedal for 40 seconds.

■ Tips: Reassembly Procedure

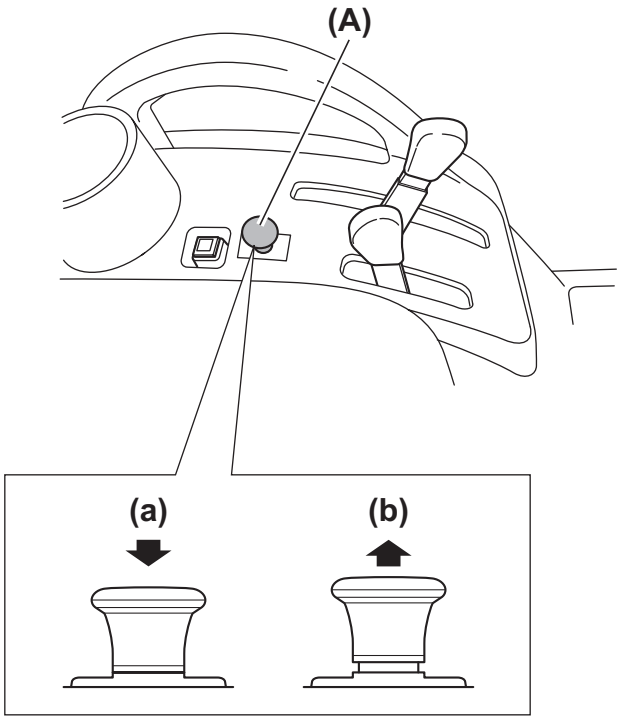

Fig. 1

(A) Power Take Off (PTO) switch
(a) OFF position
(b) ON position

5. Set Power Take Off (PTO) switch ON **(Fig. 1, (b))** and OFF **(Fig. 1, (a))**.

11. REPLACEMENT

1. Table of Contents

2. Replacement of Broken Power Take Off (PTO) Bearing or Gear 11-4
2-1 Removal 11-4
2-2 Installation 11-4
3. Replacement of Hood And Headlight 11-4
3-1 Removal 11-4
3-2 Installation 11-4
4. Replacement of Radiator 11-4
4-1 Removal 11-4
4-2 Installation 11-4
5. Replacement of Rear Axle Oil Seal and Rear Axle Case 11-5
5-1 Removal 11-5
5-2 Installation 11-5
6. Replacement of Front Axle Oil Seal 11-5
6-1 Removal 11-5
6-2 Installation 11-5
7. Replacement of Power Take Off (PTO) Shaft Oil Seal 11-5
7-1 Removal 11-5
7-2 Installation 11-5
8. Replacement of Implement Control Valve 11-6
8-1 Removal 11-6
8-2 Installation 11-6
9. Replacement of Power Steering Valve and Hose 11-6
9-1 Removal 11-6
9-2 Installation 11-6
10. Replacement of Power Steering (PST) Cylinder 11-6
10-1 Removal 11-6
10-2 Installation 11-6
11. Replacement of Instrument Panel / Panel Illumination Light 11-7
11-1 Removal 11-7
11-2 Installation 11-7
12. Replacement of Lift Cylinder 11-7
12-1 Removal 11-7
12-2 Installation 11-7
13. Replacement of Front Center Pin (Including Bushing and Seal) 11-7
13-1 Removal 11-7
13-2 Installation 11-7
14. Replacement of Thermostat 11-7
14-1 Removal 11-7
14-2 Installation 11-7
15. Replacement of Fuel Shutoff Solenoid Valve 11-8
15-1 Removal 11-8
15-2 Installation 11-8
16. Replacement of Fuel Filter and Fuel Feed Pump 11-8
16-1 Removal 11-8
16-2 Installation 11-8
17. Replacement of 3-Point Hitch 11-8
17-1 Removal 11-8
17-2 Installation 11-8
18. Replacement of Fuel Tank 11-8
18-1 Removal 11-8
18-2 Installation 11-8

19. Replacement of RPM Meter Cable 11-9
19-1 Removal 11-9
19-2 Installation 11-9
20. Replacement of Engine Mount 11-9
20-1 Removal 11-9
20-2 Installation 11-9
21. Replacement of Fuel Sensor 11-9
21-1 Removal 11-9
21-2 Installation 11-9
22. Replacement of Dashboard Upper Switch 11-10
22-1 Removal 11-10
22-2 Installation 11-10
23. Replacement of Flasher Unit 11-10
23-1 Removal 11-10
23-2 Installation 11-10
24. Replacement of Accelerator / Throttle 11-10
24-1 Removal 11-10
24-2 Installation 11-10
25. Replacement of Oil Cooler 11-11
25-1 Removal 11-11
25-2 Installation 11-11
26. Replacement of Main Drive Shaft 11-11
26-1 Removal 11-11
26-2 Installation 11-11
27. Replacement of Various Lamp Bulbs 11-11
27-1 Removal 11-11
27-2 Installation 11-11

2. Replacement of Broken Power Take Off (PTO) Bearing or Gear

2-1 Removal

For the removal work, see Chapter 5. POWER TRAIN - HYDROSTATIC, "6-1 Disassembling Procedure".

2-2 Installation

For the installation work, see Chapter 5. POWER TRAIN - HYDROSTATIC, "6-2 Assembling Procedure, 6-2-2 Assembling the Power Take Off (PTO), (2) Assembling the Power Take Off (PTO) clutch pack".

3. Replacement of Hood And Headlight

3-1 Removal

For the removal work, see Chapter 10. REPAIR, "4. Hood".

3-2 Installation

For the installation work, see Chapter 9. MISCELLANEOUS, "3-1 Procedure for Installing and Adjusting Hood Assembly".

4. Replacement of Radiator

4-1 Removal

For the removal work, see Chapter 10. REPAIR, "33. Radiator".

4-2 Installation

For the installation work, see Chapter 10. REPAIR, "33. Radiator".
Installation is the reverse order of removal / disassembly.

5. Replacement of Rear Axle Oil Seal and Rear Axle Case

5-1 Removal

For the removal work, see Chapter 5. POWER TRAIN - HYDROSTATIC, "6-1 Disassembling Procedure, 6-1-4 Disassembling the transaxle, (1) Disassembling the axle case".

5-2 Installation

For the installation work, see Chapter 5. POWER TRAIN - HYDROSTATIC, "6-2 Assembling Procedure, 6-2-1 Assembling the Transaxle, (3) Assembling the left hand axle shaft.".

6. Replacement of Front Axle Oil Seal

6-1 Removal

For the removal work, see Chapter 5. POWER TRAIN - HYDROSTATIC, "6-3 Disassembling and Assembling (Front Axle)".

6-2 Installation

For the installation work, see Chapter 5. POWER TRAIN - HYDROSTATIC, "6-3 Disassembling and Assembling (Front Axle)".

7. Replacement of Power Take Off (PTO) Shaft Oil Seal

7-1 Removal

For the removal work, see Chapter 5. POWER TRAIN - HYDROSTATIC, "6-1 Disassembling Procedure, 6-1-2 Disassembling the Power Take Off (PTO), (1) Disassembling the rear Power Take Off (PTO) assembly, from step 5".

7-2 Installation

For the installation work, see Chapter 5. POWER TRAIN - HYDROSTATIC, "6-2 Assembling Procedure, 6-2-2 Assembling the Power Take Off (PTO), (11) Installing the Rear Power Take Off (PTO) unit".

8. Replacement of Implement Control Valve

8-1 Removal

8-1-1 Removing the implement control valve assembly

For the removal work, see Chapter 10. REPAIR, "46. Removing the Implement Control Valve Assembly".

8-1-2 Disassembling the implement control valve assembly

For the removal work, see Chapter 10. REPAIR, "47. Disassembling the Implement Control Valve Assembly".

8-2 Installation

For the installation work, see Chapter 10. REPAIR, "47. Disassembling the Implement Control Valve Assembly".
Installation is the reverse order of removal / disassembly.

9. Replacement of Power Steering Valve and Hose

9-1 Removal

For the removal work, see Chapter 10. REPAIR, "34. Power Steering Valve".

9-2 Installation

For the installation work, see Chapter 10. REPAIR, "34. Power Steering Valve".
Installation is the reverse order of removal / disassembly.

10. Replacement of Power Steering (PST) Cylinder

10-1 Removal

For the removal work, see Chapter 10. REPAIR, "14. Power Steering (PST) Cylinder".

10-2 Installation

For the installation work, see Chapter 10. REPAIR, "14. Power Steering (PST) Cylinder".
Installation is the reverse order of removal / disassembly.

11. Replacement of Instrument Panel / Panel Illumination Light

11-1 Removal

For the removal work, see Chapter 10. REPAIR, "23. Instrument Panel".

11-2 Installation

For the installation work, see Chapter 10. REPAIR, "23. Instrument Panel".
Installation is the reverse order of removal / disassembly.

12. Replacement of Lift Cylinder

12-1 Removal

For the removal work, see Chapter 10. REPAIR, "43. Removing the Lift Cylinder" and "44. Disassembling the Lift Cylinder".

12-2 Installation

For the installation work, see Chapter 10. REPAIR, "43. Removing the Lift Cylinder" and "44. Disassembling the Lift Cylinder".
Installation is the reverse order of removal / disassembly.

13. Replacement of Front Center Pin (Including Bushing and Seal)

13-1 Removal

For the removal work, see Chapter 10. REPAIR, "16. Front Axle".

13-2 Installation

For the installation work, see Chapter 10. REPAIR, "16. Front Axle".
Installation is the reverse order of removal / disassembly.

14. Replacement of Thermostat

14-1 Removal

14-2 Installation

15. Replacement of Fuel Shutoff Solenoid Valve

15-1 Removal

15-2 Installation

16. Replacement of Fuel Filter and Fuel Feed Pump

16-1 Removal

For the removal work, see Chapter 10. REPAIR, "32. Fuel Filter and Fuel Feed Pump".

16-2 Installation

For the installation work, see Chapter 10. REPAIR, "32. Fuel Filter and Fuel Feed Pump".
Installation is the reverse order of removal / disassembly.

17. Replacement of 3-Point Hitch

17-1 Removal

For the removal work, see Chapter 10. REPAIR, "3. 3-Point Hitch Separation".

17-2 Installation

For the installation work, see Chapter 10. REPAIR, "3. 3-Point Hitch Separation".
Installation is the reverse order of removal / disassembly.

18. Replacement of Fuel Tank

18-1 Removal

For the removal work, see Chapter 10. REPAIR, "40. Fuel Tank".

18-2 Installation

For the installation work, see Chapter 10. REPAIR, "40. Fuel Tank".
Installation is the reverse order of removal / disassembly.

19. Replacement of RPM Meter Cable

19-1 Removal

For the removal work, see Chapter 10. REPAIR, "19. Hour Meter Cable".

19-2 Installation

For the installation work, see Chapter 10. REPAIR, "19. Hour Meter Cable".
Installation is the reverse order of removal / disassembly.

20. Replacement of Engine Mount

20-1 Removal

For the removal work, see Chapter 10. REPAIR, "30. Engine Mount".

20-2 Installation

For the installation work, see Chapter 10. REPAIR, "30. Engine Mount".
Installation is the reverse order of removal / disassembly.

21. Replacement of Fuel Sensor

21-1 Removal

For the removal work, see Chapter 10. REPAIR, "41. Fuel Sensor".

21-2 Installation

For the installation work, see Chapter 10. REPAIR, "41. Fuel Sensor".
Installation is the reverse order of removal / disassembly.

22. Replacement of Dashboard Upper Switch

22-1 Removal

For the removal work, see Chapter 10. REPAIR, "22. Dashboard Upper Switch".

22-2 Installation

For the installation work, see Chapter 10. REPAIR, "22. Dashboard Upper Switch".
Installation is the reverse order of removal / disassembly.

23. Replacement of Flasher Unit

23-1 Removal

23-2 Installation

24. Replacement of Accelerator / Throttle

24-1 Removal

For the removal work, see Chapter 10. REPAIR, "27. Engine Control Cable" and Chapter 9. MISCELLANEOUS, "4. Accelerator / Throttle Adjustment".

24-2 Installation

For the installation work, see Chapter 10. REPAIR, "27. Engine Control Cable" and Chapter 9. MISCELLANEOUS, "4. Accelerator / Throttle Adjustment".
Installation is the reverse order of removal / disassembly.

25. Replacement of Oil Cooler

25-1 Removal

For the removal work, see Chapter 10. REPAIR, "36. Oil Cooler".

25-2 Installation

For the installation work, see Chapter 10. REPAIR, "36. Oil Cooler".
Installation is the reverse order of removal / disassembly.

26. Replacement of Main Drive Shaft

26-1 Removal

For the removal work, see Chapter 10. REPAIR, "38. Main Drive Shaft".

26-2 Installation

For the installation work, see Chapter 10. REPAIR, "38. Main Drive Shaft".
Installation is the reverse order of removal / disassembly.

27. Replacement of Various Lamp Bulbs

27-1 Removal

27-1-1 Turn signal / hazard light removal

For the removal work, see Chapter 10. REPAIR, "5. Turn Signal / Hazard Light Removal".

27-1-2 Replacement of headlight bulb

For the installation work, see Chapter 10. REPAIR "4. Hood"

27-2 Installation

27-2-1 Turn signal / hazard light installation

For the installation work, see Chapter 10. REPAIR, "5. Turn Signal / Hazard Light Removal".
Installation is the reverse order of removal / disassembly.

27-1-2 Headlight bulb installation

For the installation work, see Chapter 10. REPAIR "4. Hood".
Installation is the reverse order of removal / disassembly.